284-77

PROJECT ID: 9479-00-71
WITH:

COUNTY: MARATHON

ORDER OF SHEETS

Section No.	1	Title
Section No.	2	Typical Sections and Details
Section No.	3	Estimate of Quantities
Section No.	3	Miscellaneous Quantities
Section No.	4	Right of Way Plat
Section No.	5	Plan and Profile
Section No.	6	Standard Detail Drawings
Section No.	7	Sign Plates
Section No.	8	Structure Plans
Section No.	9	Computer Earthwork Data
Section No.	9	Cross Sections

TOTAL SHEETS =

STATE OF WISCONSIN
DEPARTMENT OF TRANSPORTATION

PLAN OF PROPOSED IMPROVEMENT

STH 13 - CTH F

EAST BRANCH, BIG EAU PLEINE RIVER BRIDGE & APPROACHES

CTH A

MARATHON COUNTY

STATE PROJECT	FEDERAL PROJECT	
	PROJECT	CONTRACT
9479-00-71		

STATE PROJECT NUMBER
9479-00-71

N

DESIGN DESIGNATION

A.D.T. (2005)	=	750
A.D.T. (2025)	=	914
D.D.	=	0.50
T.	=	10%
DESIGN SPEED	=	60 MPH

CONVENTIONAL SYMBOLS

PLAN
- CORPORATE LIMITS
- PROPERTY LINE
- LOT LINE
- LIMITED HIGHWAY EASEMENT
- EXISTING RIGHT OF WAY
- PROPOSED OR NEW R/W LINE
- SLOPE INTERCEPT
- REFERENCE LINE
- EXISTING CULVERT
- PROPOSED CULVERT (Box or Pipe)
- COMBUSTIBLE FLUIDS — CAUTION
- MARSH AREA
- WOODED OR SHRUB AREA

PROFILE
- GRADE LINE
- ORIGINAL GROUND
- MARSH OR ROCK PROFILE (To be noted as such) — ROCK
- SPECIAL DITCH — LABEL
- GRADE ELEVATION — 95.36
- CULVERT (Profile View)

UTILITIES
- ELECTRIC — E
- FIBER OPTIC — FO
- GAS — G
- SANITARY SEWER — SAN
- STORM SEWER — SS
- TELEPHONE — T
- WATER — W
- UTILITY PEDESTAL
- POWER POLE
- TELEPHONE POLE

TAYLOR CO.

Town of Deer Creek

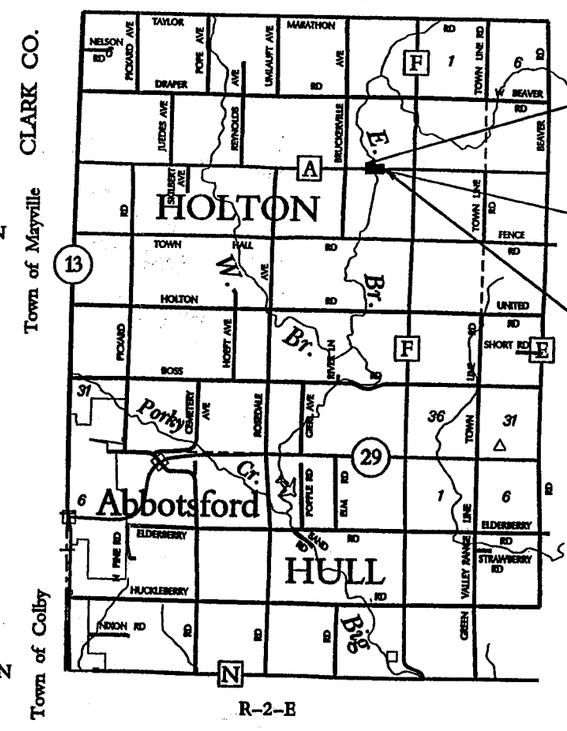

LAYOUT
SCALE 0 1.5 MI.

TOTAL NET LENGTH OF CENTERLINE = 0.03 MI.

Coordinates on this plan are referenced to an assumed coordinate system.

ACCEPTED FOR
COUNTY of MARATHON
2-26-06 (Date) (Signature & Title of Official)

ORIGINAL PLANS PREPARED BY
BLOOM CONSULTANTS, LLC
ENGINEERS PLANNERS SCIENTISTS
10001 Innovation Drive - Suite 200 • Milwaukee, WI 53226
Phone: (414) 771-3390 Fax: (414) 771-4490

WISCONSIN
DARRELL J. BERRY
E-16235
MILWAUKEE, WI
PROFESSIONAL ENGINEER

2/23/2006 (Date) Darrell J. Berry (Signature)

STATE OF WISCONSIN
DEPARTMENT OF TRANSPORTATION

PREPARED BY
- Surveyor: BLOOM CONSULTANTS
- Designer: BLOOM CONSULTANTS
- Project Manager: JASON SCHAEFFER
- District Examiner
- District Supervisor
- C.O. Examiner

APPROVED FOR DISTRICT OFFICE
DATE: 02/23/2006 (Signature)

E

2

GENERAL NOTES

TYPICAL SECTIONS SHOW THE GENERAL FEATURES THROUGHOUT EACH SECTION OF THE PROJECT. PAVEMENT SLOPES, BORDER SLOPES, ETC. MAY VARY WITHIN LIMITS OF THE SECTION.

ALL TOPSOIL WITHIN THE SLOPE INTERCEPTS SHALL BE REMOVED PRIOR TO ANY EXCAVATION.

THE EROSION CONTROL ITEMS SHOWN ON THE PLANS ARE SUGGESTED LOCATIONS. THE ENGINEER IN THE FIELD SHALL DETERMINE THE EXACT LOCATION. ALL EROSION CONTROL MEASURES SHALL BE MAINTAINED UNTIL SUCH TIME AS THE ENGINEER DETERMINES THE MEASURE IS NO LONGER NECESSARY.

TOPSOIL, WHERE REQUIRED, SHALL BE PLACED TO A DEPTH OF 4"

NO TREES OR SHRUBS ARE TO BE REMOVED WITHOUT APPROVAL OF THE ENGINEER.

EXCAVATION BELOW SUBGRADE (EBS) IS NOT USED TO BALANCE YARDAGE AND IS NOT SHOWN ON THE CROSS SECTIONS BUT IS MEASURED AND PAID FOR AS EXCAVATION COMMON.

THE LOCATIONS OF EXISTING UTILITIES AS SHOWN ON THE PLANS ARE APPROXIMATE. THERE MAY BE OTHER UTILITY INSTALLATIONS WITHIN THE PROJECT AREA THAT ARE NOT SHOWN.

DISTURBED AREAS WITHIN THE RIGHT-OF-WAY, EXCEPT THE AREAS WITHIN THE FINISHED SHOULDER POINTS, SHALL BE TOPSOILED, FERTILIZED, SEEDED, AND MULCHED.

ALL DIMENSIONS AND STATION LOCATIONS ARE REFERENCED TO THE REFERENCE LINE.

4" HMA PAVEMENT, TYPE E-3, SHALL BE PLACED IN TWO LIFTS. 2¼" LOWER LAYER AND 1¾" UPPER LAYER.

UTILITIES

TAYLOR ELECTRIC COOPERATIVE
MIKE SCHAEFER
N1831 STATE HWY 13
MEDFORD, WI 54451
715-678-2411

MIDWAY TELEPHONE COMPANY
GARY ALBRECHT
202 EAST OGDEN STREET
P. O. BOX 204
MEDFORD, WI 54451
715-748-4578

WISCONSIN DNR

WI DEPARTMENT OF NATURAL RESOURCES
WEST CENTRAL SERVICE CENTER
473 GRIFFITH STREET
WISCONSIN RAPIDS, WI 54494
ATTN: TONY FISHER
715-421-7800

DESIGNER

BLOOM CONSULTANTS, LLC
10001 INNOVATION DRIVE
SUITE 200
MILWAUKEE, WI 53226

ATTN: PATRICK ALLEN, P.E.
414-771-3390

DIGGERS HOTLINE
Toll Free (800) 242-8511
Milwaukee Area (414) 259-1181
Hearing Impaired TDD (800) 542-2289
www.DiggersHotline.com
Fax 1-800-338-3860
Fax 1-414-259-0947

TO OBTAIN LOCATION OF PARTICIPANTS' UNDERGROUND FACILITIES BEFORE YOU DIG IN WISCONSIN

CALL DIGGERS HOTLINE

WIS. STATUTE 182.0175 (1974)
REQUIRES MIN. OF 3 WORK DAYS NOTICE BEFORE YOU EXCAVATE.

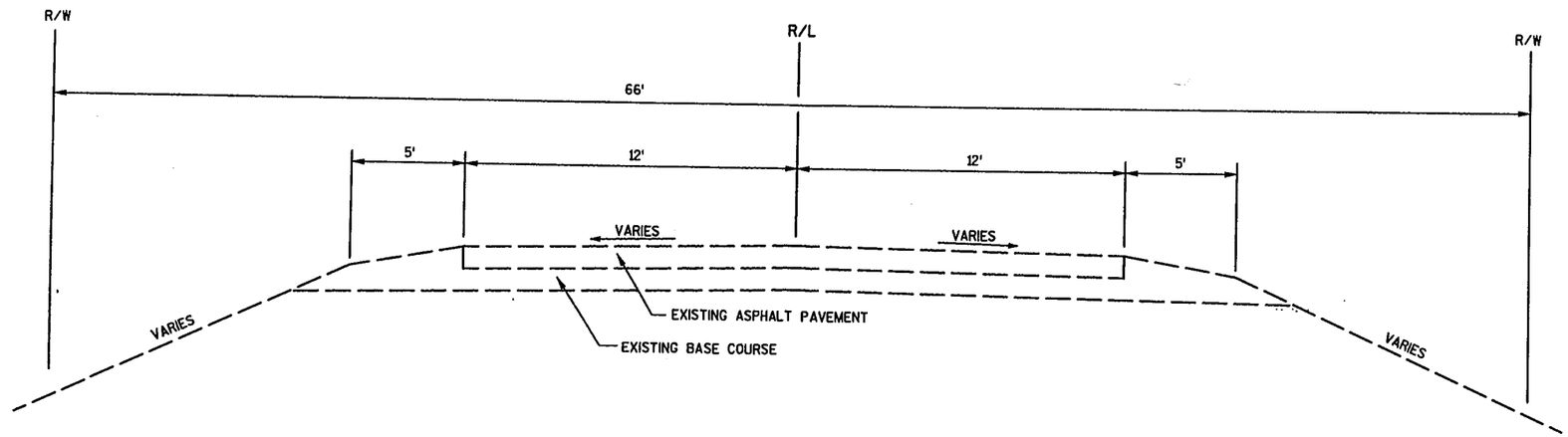

EXISTING TYPICAL SECTION

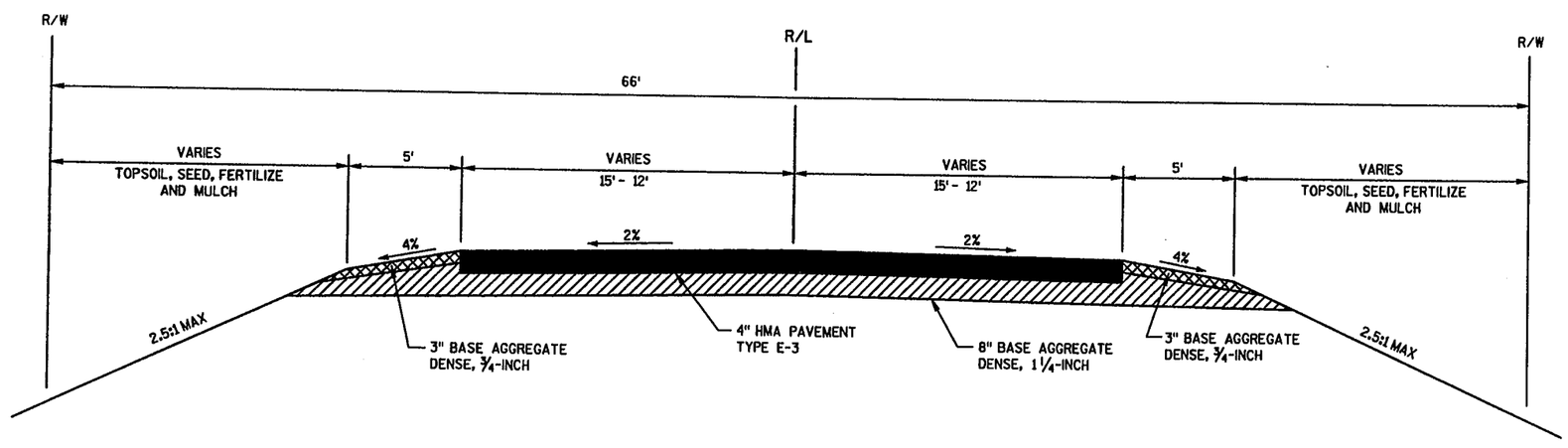

PROPOSED TYPICAL SECTION

STA. 13+00 TO STA. 14+78

PROJECT NUMBER: 9479-00-71	HWY: CTH A	COUNTY: MARATHON	TYPICAL SECTIONS		SHEET NO:	E

2

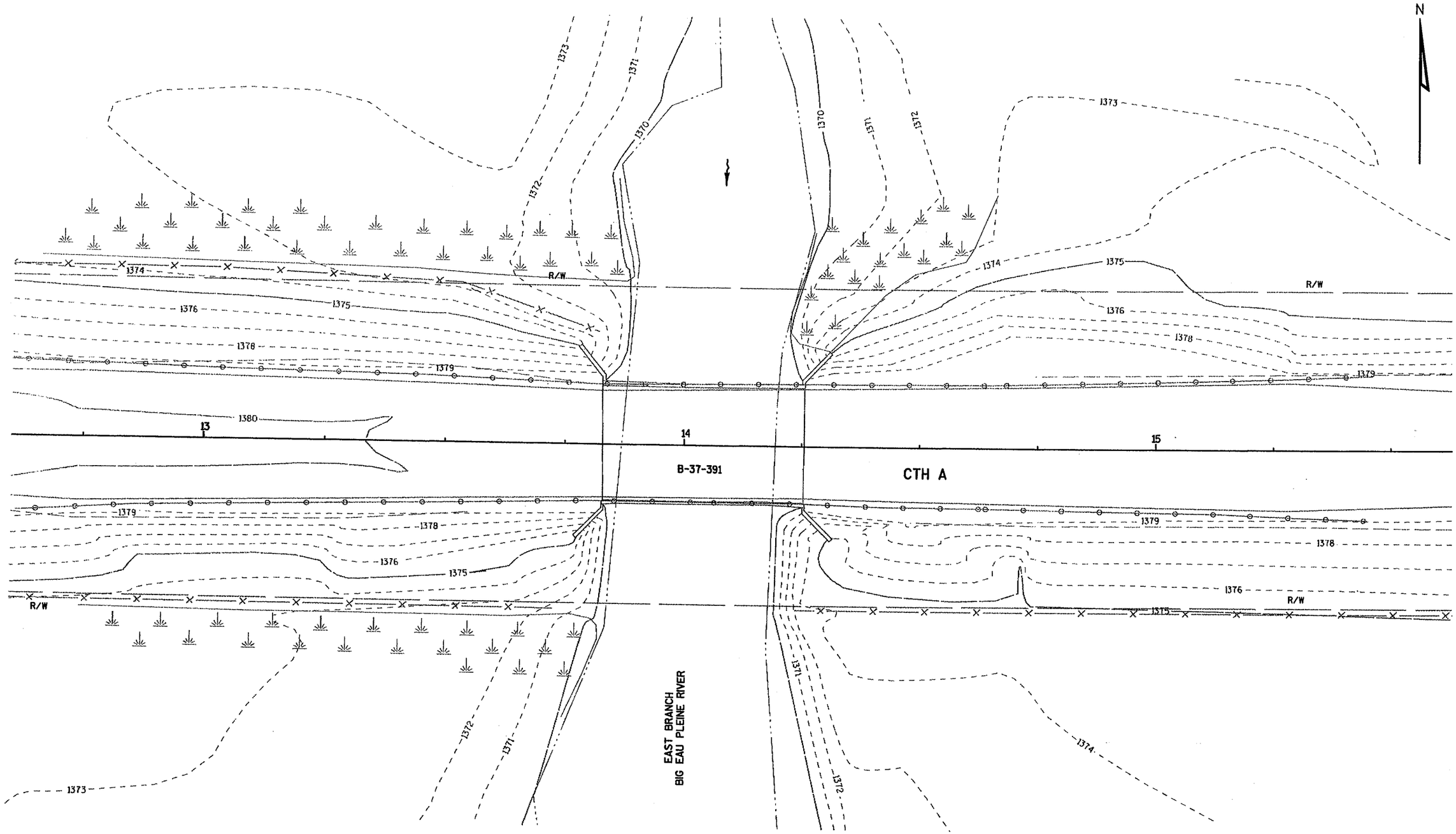

2

PROJECT NUMBER: 9479-00-71	HWY: CTH A	COUNTY: MARATHON	EXISTING CONTOUR MAP	SCALE, FEET 0 10 20	SHEET NO:	E

FILE NAME : F:\BM1-1244\Cadd\Roads\V8_Cds\a021601_cm.dgn PLOT NAME :F:\BM1-1244\Cadd\Roads\V8_Cds\a021601_cm.dgn PLOT DATE : 2/28/2006 PLOT TIME : 9:31:43 AM PLOT BY : ceven PLOT SCALE : 20.0000 ft / IN.

WISDOT/CADDS SHEET 42

2

NOTES

1) DETAILS OF CONSTRUCTION MATERIALS AND WORKMANSHIP NOT SHOWN ON THE DRAWINGS SHALL CONFORM TO THE STANDARD SPECIFICATIONS, PROVISIONS, AND STANDARD DETAILS.
2) ALL EROSION CONTROL MEASURES TO BE INSTALLED PRIOR TO THE START OF CONSTRUCTION.
3) EROSION CONTROL FEATURES AS SHOWN ON THE PLANS ARE AT SUGGESTED LOCATION, EXACT LOCATION WILL BE DETERMINED BY THE ENGINEER IN THE FIELD.
4) ALL DISTURBED AREAS SHALL HAVE FINISHED ITEMS APPLIED WITHIN 15 WORKING DAYS AFTER GRADING WORK IS COMPLETED.

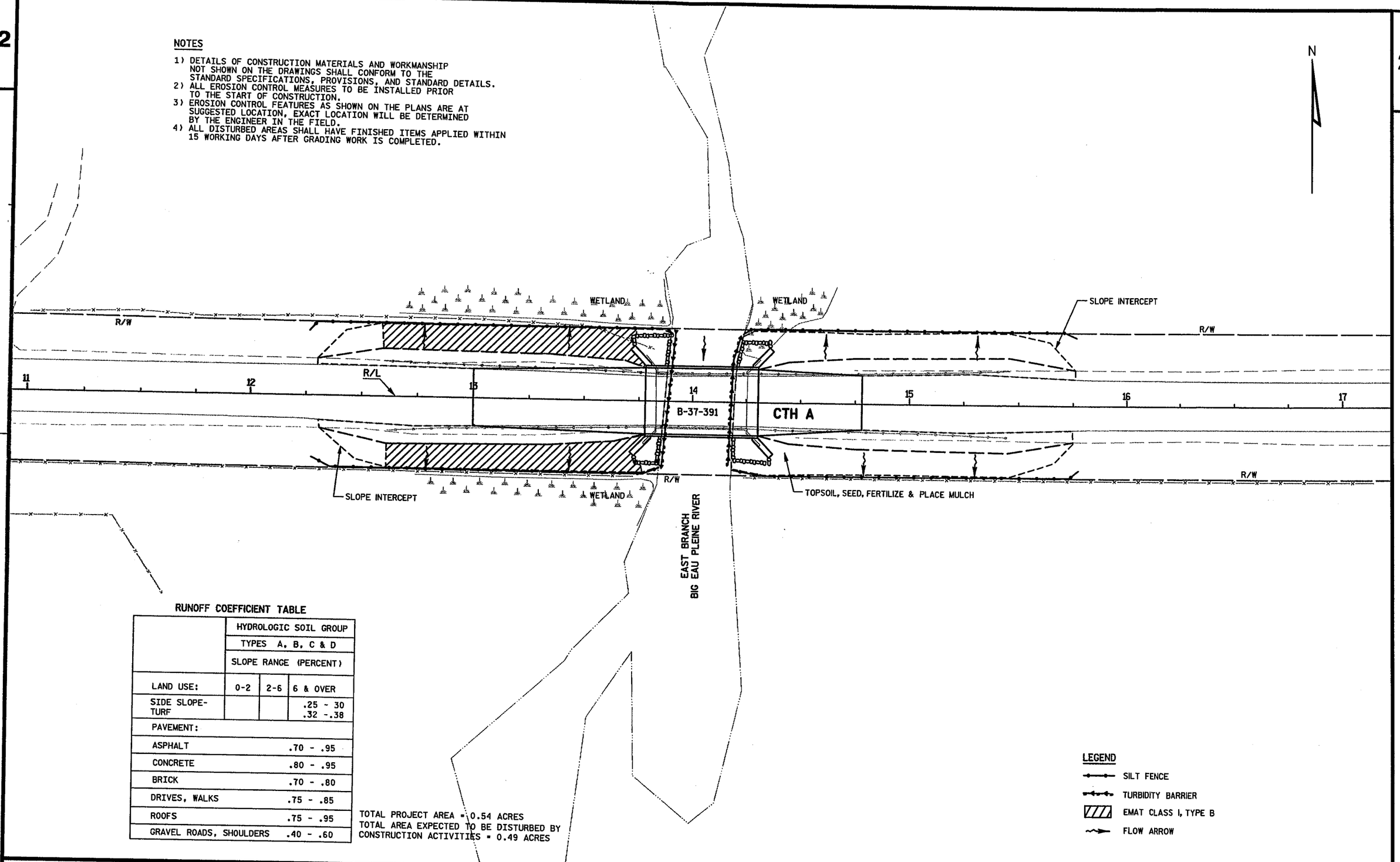

RUNOFF COEFFICIENT TABLE

	HYDROLOGIC SOIL GROUP		
	TYPES A, B, C & D		
	SLOPE RANGE (PERCENT)		
LAND USE:	0-2	2-6	6 & OVER
SIDE SLOPE-TURF			.25 - 30 .32 -.38
PAVEMENT:			
ASPHALT			.70 - .95
CONCRETE			.80 - .95
BRICK			.70 - .80
DRIVES, WALKS			.75 - .85
ROOFS			.75 - .95
GRAVEL ROADS, SHOULDERS			.40 - .60

TOTAL PROJECT AREA = 0.54 ACRES
TOTAL AREA EXPECTED TO BE DISTURBED BY CONSTRUCTION ACTIVITIES = 0.49 ACRES

PROJECT NUMBER: 9479-00-71	HWY: CTH A	COUNTY: MARATHON	EROSION CONTROL PLAN	SCALE, FEET 0 20 40	SHEET NO:	E

FILE NAME : F:\BM1-1244\Cadd\Roads\V8_Cds\a022001_ec.dgn PLOT NAME :F:\BM1-1244\Cadd\Roads\V8_Cds\a022001_ec.dgn PLOT DATE : 2/28/2006 PLOT TIME : 9:42:29 AM PLOT BY : ceven PLOT SCALE : 40.0000 ft / IN.

WISDOT/CADDS SHEET 42

2

NOTES

1) DETAILS OF CONSTRUCTION MATERIALS AND WORKMANSHIP NOT SHOWN ON THE DRAWINGS SHALL CONFORM TO THE STANDARD SPECIFICATIONS, PROVISIONS, AND STANDARD DETAIL

2) CONTRACTOR SHALL APPLY PAVEMENT MARKINGS IN ACCORDANCE WITH THE WISCONSIN MANUAL ON UNIFORM TRAFFIC CONTROL DEVICES.

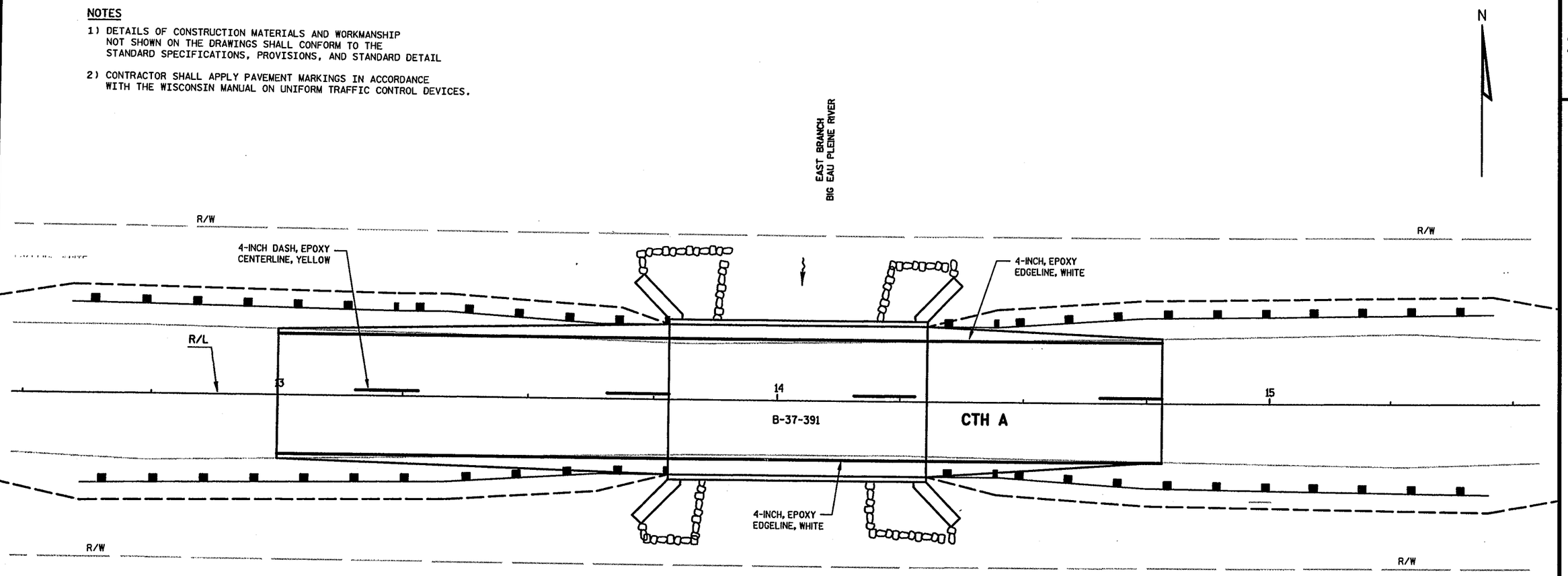

2

PROJECT NUMBER: 9479-00-71	HWY: CTH A	COUNTY: MARATHON	PAVEMENT MARKING PLAN	SCALE, FEET 0 10 20	SHEET NO:	E

FILE NAME : f:\bm1-1244\cadd\roads\v8_ods\a024501_pm.dgn PLOT NAME :f:\bm1-1244\cadd\roads\v8_ods\a024501_pm.dgn PLOT DATE : 2/24/2006 PLOT TIME : 4:54:54 PM PLOT BY : ofranzen PLOT SCALE : 19.6271 ft / IN.

WISDOT/CADDS SHEET 42

2

GENERAL NOTES

1) THE EXACT NUMBER, LOCATION, AND SPACING OF ALL SIGNS AND BARRICADES SHALL BE ADJUSTED TO FIT FIELD CONDITIONS AS APPROVED BY THE ENGINEER.

2) ANY SIGNS TEMPORARY OR EXISTINGS, WHICH CONFLICT WITH TRAFFIC CONTROL "IN USE" SHALL BE REMOVED OR COVERED AS NEEDED AND AS APPROVED BY THE ENGINEER.

3) THE SPACING BETWEEN TRAFFIC CONTROL SIGNS SHOULD BE ADJUSTED TO NOT CONFLICT WITH AND SHOULD PROVIDE A DESIRABLE MINIMUM OF 200 FEET CLEARANCE TO EXISTING SIGNS THAT WILL REMAIN IN PLACE.

4) BARRICADES THAT MUST BE MOVED FOR A WORK OPERATION SHALL BE IMMEDIATELY RE -ESTABLISHED UPON COMPLETION OF THE OPERATION OR, FOR CONTINUING OPERATIONS, AT THE END OF EACH WORKING DAY.

5) SIGNS THAT WILL BE IN PLACE LESS THAN 7 CONTINUOUS DAYS AND NIGHTS MAY BE MOUNTED ON PORTABLE SUPPORTS.

6) ALL TYPE III BARRICADES SHALL HAVE RAILS REFLECTORIZED ON BOTH FACES. STRIPES SHALL BE PROPERLY SLOPED DOWN TOWARD THE TRAFFIC SIDE OR AS SHOWN IN THE ROAD CLOSURE BARRICADE DETAIL D FOR FULL ROAD CLOSURES.

7) TYPE "A" LOW -INTENSITY FLASHING WARNING LIGHTS SHALL BE VISIBLE ON BOTH SIDES OF THE BARRICADE.

8) THE R11-2, R11-3, M4-9, R11-4 AND R10-61 SIGNS PLACED ON BARRICADES SHALL COVER NO MORE THAN THE TOP RAIL. THE SIGNS SHALL NOT COVER ANY PORTION OF THE MIDDLE OR BOTTOM RAILS.

9) THE EFFECTIVE SHEETING USED ON R11-2, R11-3, R-114, R10-61 AND R1-1 SIGNS SHALL COMPLY WITH SUBSECTION 637.2.2.2 OF THE STANDARD SPECIFICATIONS.

10) "WO" AND "MO" SIGNS ARE THE SAME AS "W" AND "M" SIGNS EXCEPT THE BACKGROUND IS ORANGE.

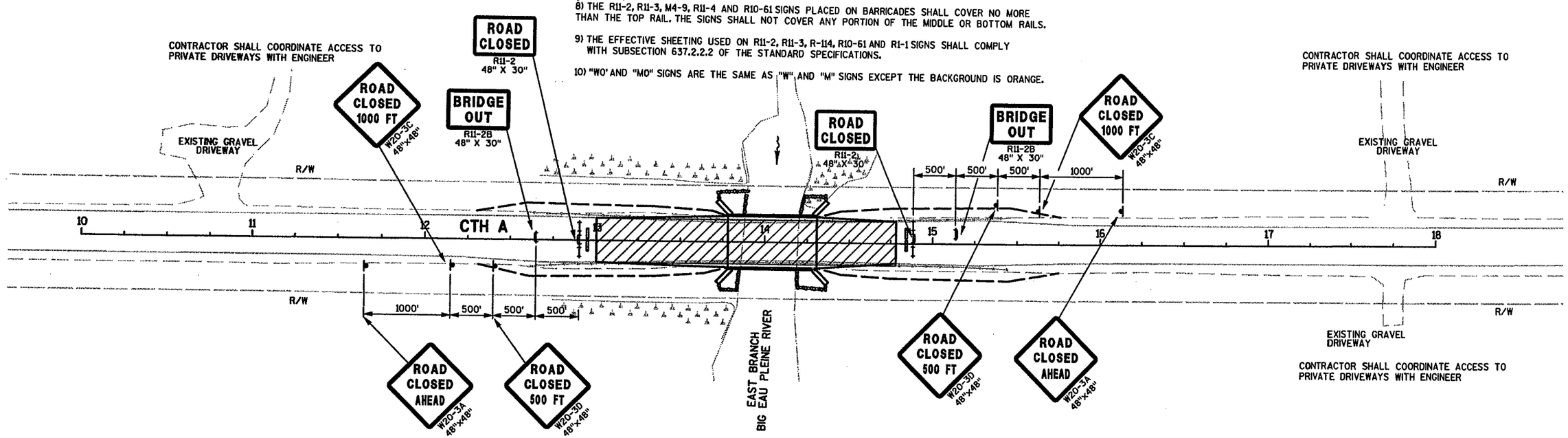

LEGEND

- TYPE III BARRICADE WARNING LIGHT (TYPE A)
- TYPE III BARRICADE WITH ATTACHED SIGN AND WARNING LIGHT (TYPE A)
- TEMPORARY PRECAST CONCRETE BARRIER
- EXISTING SIGN
- PROPOSED SIGN
- WORK ZONE

PROJECT NUMBER: 9479-00-71	HWY: CTH A	COUNTY: MARATHON	TRAFFIC CONTROL OVERVIEW	SCALE, FEET 0 30 60	SHEET NO:	E

FILE NAME : f:\bm1-1244\cadd\roads\v8_cds\a025001_to.dgn PLOT NAME :f:\bm1-1244\cadd\roads\v8_cds\a025001_to.dgn PLOT DATE : 2/24/2006 PLOT TIME : 4:55:47 PM PLOT BY : ofranzen PLOT SCALE : 58.8812 ft / IN.

WISDOT/CADDS SHEET 42

2

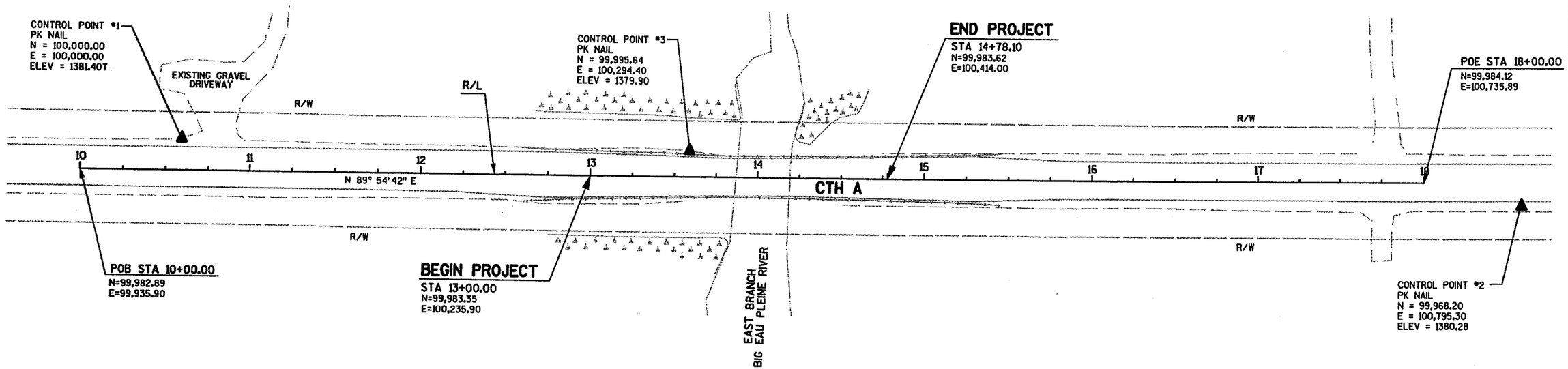

2

PROJECT NUMBER: 9479-00-71	HWY: CTH A	COUNTY: MARATHON	ALIGNMENT PLAN	SCALE, FEET 0 30 60	SHEET NO:	E

FILE NAME : f:\bm1-1244\oadd\roads\v8_ods\a027201_ad.dgn PLOT NAME :f:\bm1-1244\oadd\roads\v8_ods\a027201_ad.dgn PLOT DATE : 2/24/2006 PLOT TIME : 4:55:56 PM PLOT BY : ofranzen PLOT SCALE : 58.8812 ft / IN.

WISDOT/CADDS SHEET 42

BENCHMARK

NO.	STA.	O/S	DESCRIPTION	ELEV.
	14+30	18' RT.	CHISELED "□" ON EXIST. SE WINGWALL	1380.82

STA. 14+04
REMOVE OLD BRIDGE P-37-68
1 SPAN STEEL DECK GIRDER BRIDGE
CLEAR ROADWAY WIDTH = 24'-0"

STA. 14+04
STRUCTURE B-37-391
LENGTH = 54'-0"
OVERALL WIDTH = 32'-0 "
CLEAR ROADWAY WIDTH = 30'-0"

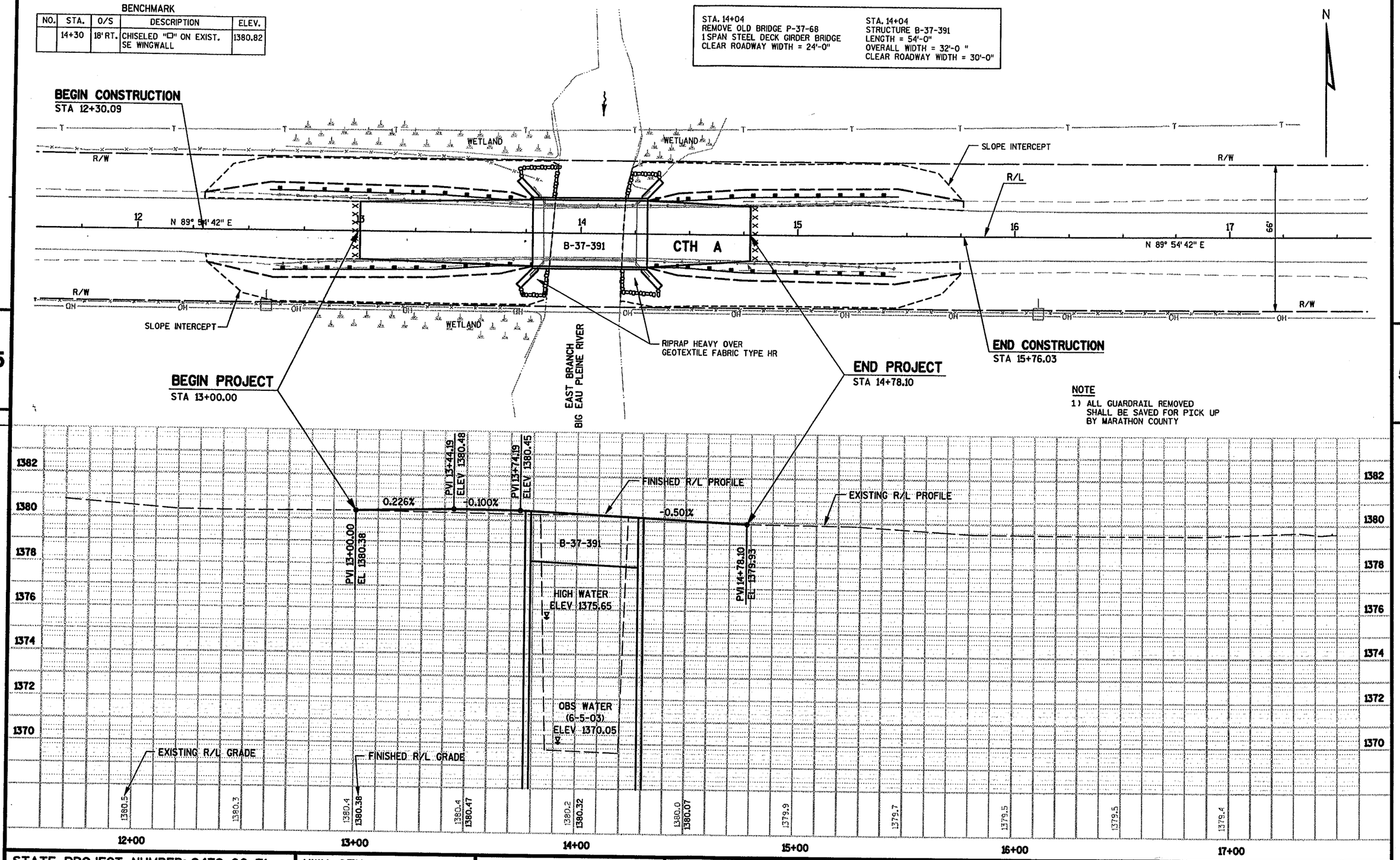

STATE PROJECT NUMBER: 9479-00-71	HWY: CTH A	COUNTY: MARATHON	PLAN AND PROFILE	SCALE, FEET 0 20 40	SHEET NO:	E

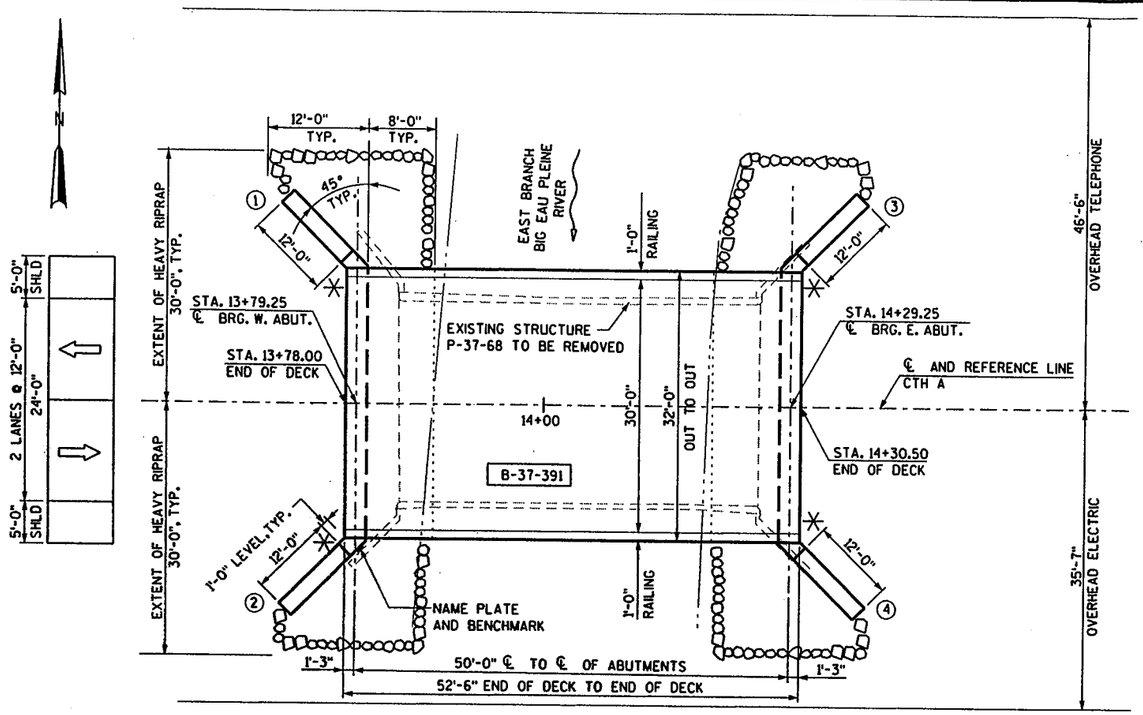

PLAN

(SINGLE SPAN - CONCRETE FLAT SLAB BRIDGE)

CTH A PROFILE GRADE LINE

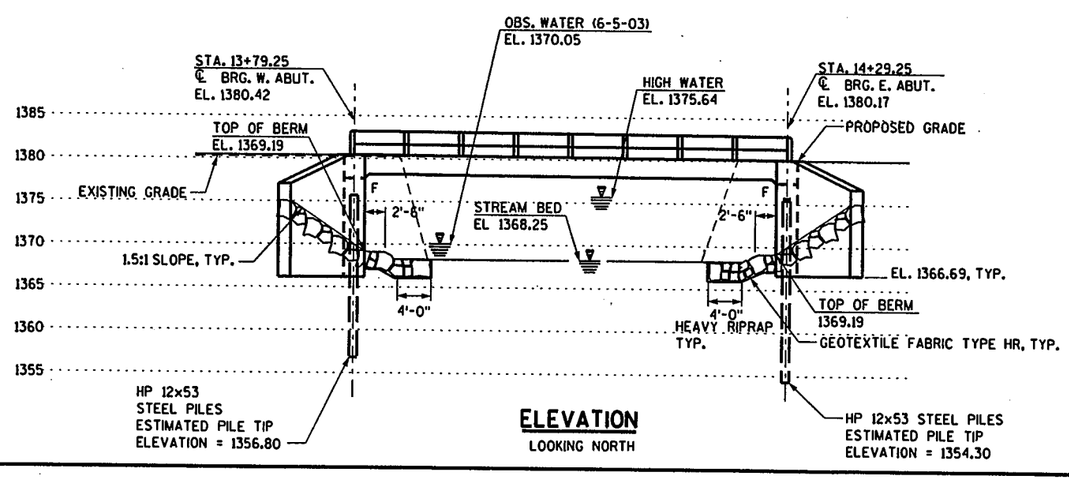

ELEVATION

LOOKING NORTH

DESIGN DATA

LIVE LOAD

DESIGN RATING: HS20
INVENTORY RATING: HS24
OPERATING RATING: HS40
MAX STANDARD PERMIT VEHICLE LOAD = 250K

STRUCTURE IS DESIGNED FOR A FUTURE WEARING SURFACE OF 20 PSF.

ULTIMATE DESIGN STRESSES

CONCRETE MASONRY SLAB	f'c = 4,000 psi
ALL OTHERS	f'c = 3,500 psi
HIGH STRENGTH BAR STEEL REINFORCEMENT	fy = 60,000 PSI

HYDRAULIC DATA

Q 100 =	1,700 CFS
VELOCITY CHANNEL =	8.95 FPS
HIGH WATER 100 ELEV =	1375.4
WATERWAY AREA =	190 SQ. FT.
DRAINAGE AREA =	20.6 SQ. MILES
SCOUR CODE =	5
ROADWAY OVERTOPG =	N/A
Q2 =	574 CFS
Q2 ELEV =	1372.3

FOUNDATION DATA

ABUTMENTS ARE TO BE SUPPORTED ON HP 12x53 STEEL PILES. PILES AT THE EAST ABUTMENT SHALL BE DRIVEN TO REFUSAL TO BEAR ON SOUND ROCK TO A MINIMUM BEARING VALUE OF 55 TONS. PILES AT THE WEST ABUTMENT SHALL BE PREBORED A MINIMUM OF 3'-0" INTO SOLID BEDROCK.
ESTIMATED LENGTH OF PILES IS 20 FEET AT ABUTMENT BODIES.
ESTIMATED LENGTH OF PILES IS 15 FEET AT ABUTMENT WINGS.

TRAFFIC DATA

ADT (2005)	750
ADT (2025)	914
DESIGN SPEED	50 M.P.H.

○ DENOTES WINGWALL NUMBER

✳ MATCH ROADWAY BEAM GUARD

WISCONSIN PROFESSIONAL ENGINEER
MARYSUE M. ABEL
E-32336
MILWAUKEE, WI
2-23-06

BENCHMARK

CHISELED SQUARE ON EXISTING SE WINGWALL OF STRUCTURE P-37-68
EL= 1380.82

MONUMENT ON EXISTING NW WINGWALL OF STRUCTURE P-37-68
EL= 1380.87

No.	Date	Revisions	By

BLOOM CONSULTANTS, LLC
ENGINEERS PLANNERS SCIENTISTS
10001 Innovation Drive - Suite 200 ◆ Milwaukee, WI 53226
Phone: (414) 771-3390 Fax: (414) 771-4490

STATE PROJECT NUMBER
9479-00-71

GENERAL NOTES

ALL DETAILS, MATERIALS, AND FABRICATION SHALL CONFORM TO THE STANDARD SPECIFICATION FOR HIGHWAY & STRUCTURE CONSTRUCTION OF THE STATE OF WISCONSIN DEPARTMENT OF TRANSPORTATION, EDITION OF 2003, EXCEPT AS OTHERWISE NOTED.

DRAWINGS SHALL NOT BE SCALED.

BAR STEEL REINFORCEMENT SHALL BE EMBEDDED 2" CLEAR UNLESS OTHERWISE SHOWN OR NOTED.

ALL REINFORCING BARS ARE IN ENGLISH. THE FIRST DIGIT OF A THREE-DIGIT BAR MARK OR THE FIRST TWO DIGITS OF A FOUR-DIGIT BAR MARK SIGNIFY THE BAR SIZE.

BAR DIMENSIONS ARE OUT TO OUT OF BAR.

BEVEL ALL EXPOSED EDGES 1" UNLESS OTHERWISE NOTED.

ALL STATIONS AND ELEVATIONS ARE IN FEET
ALL STATIONS ARE REFERRED TO NGVD.

THE FINISHED GRADED SECTION SHALL BE THE UPPER LIMIT OF "EXCAVATION FOR STRUCTURES".

AT THE BACK FACE OF ABUTMENTS ALL EXCAVATED VOLUME NOT OCCUPIED BY THE NEW STRUCTURE SHALL BE BACKFILLED WITH "BACKFILL STRUCTURE". PAYMENT WILL BE MADE ONLY FOR MATERIAL ACTUALLY PLACED WITHIN LIMITS FOR "EXCAVATION FOR STRUCTURES".

THE SLOPE OF FILL IN FRONT OF THE ABUTMENT SHALL BE COVERED WITH "RIPRAP HEAVY" TO THE EXTENT SHOWN ON THIS SHEET AND IN THE ABUTMENT DETAILS.

STRUCTURE B-37-391 WILL REPLACE EXISTING STRUCTURE P-37-68, WHICH IS A 43' LONG BY 25' WIDE SINGLE SPAN STEEL GIRDER BRIDGE.

LIST OF DRAWINGS

1. GENERAL PLAN AND ELEVATION
2. CROSS SECTION AND QUANTITIES
3. SUBSURFACE EXPLORATION
4. ABUTMENT PLAN AND ELEVATION
5. ABUTMENT DETAILS
6. SUPERSTRUCTURE
7. STEEL RAILING TYPE "W"

BRIDGE OFFICE CONTACT:
FINN HUBBARD
(608) 266-8489

CONSULTANT CONTACT:
DARRELL BERRY
(414) 771-3390

NO.	DATE	REVISION	BY

WISDOT
BUREAU OF STRUCTURES

APPROVED _____ _____
CHIEF STRUCTURAL DESIGN ENGINEER DATE

8

STRUCTURE B-37-391

CTH A OVER E. BRANCH, BIG EAU PLEINE RIVER

COUNTY MARATHON		TOWN HOLTON	
DESIGN SPEC. AASHTO 2003		LOAD HS 20	CONST. SPEC. 2003
DESIGNED BY JEG	DESIGN CK'D. MSA	DRAWN BY BAS	PLANS CK'D. MSA

GENERAL PLAN AND ELEVATION

SHEET 1 OF 7

DATE:

PLOTTED BY: bsouve
DATE: 02/21/2006
FILE NAME: Y:\Archived Projects (READ-ONLY)\BMI-1244 CTH A Bridges\Cadd\Bridges\Cds\01BMI-1142.dgn
PEN TABLE: vf_Structures.tbl

STATE PROJECT NUMBER
9479-00-71

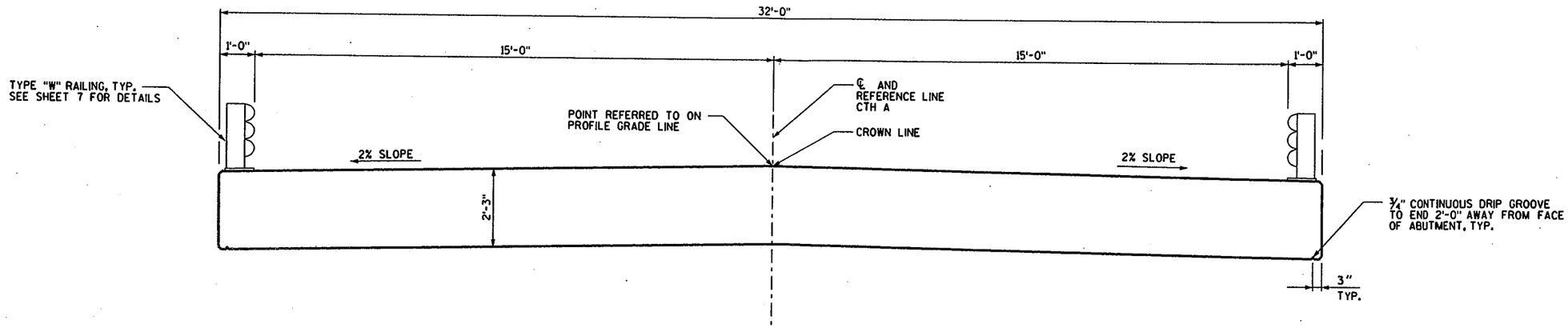

TYPICAL CROSS SECTION

TOTAL ESTIMATE OF QUANTITIES

ITEM NO.	BID ITEMS	UNITS	WEST ABUT.	EAST ABUT.	SUPER.	TOTAL
203.0200	REMOVING OLD STRUCTURE STA. 14+10	LS				1
206.1000	EXCAVATION FOR STRUCTURES BRIDGES B-37-391	LS				1
210.0100	BACKFILL STRUCTURE	CY	400	400		800
502.0100	CONCRETE MASONRY BRIDGES	CY	56	55	145	256
502.3200	PROTECTIVE SURFACE TREATMENT	SY			187	187
505.0405	BAR STEEL REINFORCEMENT HS BRIDGES	LB	3770	3770		7540
505.0605	BAR STEEL REINFORCEMENT HS COATED BRIDGES	LB	90	90	23620	23800
511.2110	PILING STEEL DELIVERED AND DRIVEN HP 12-INCH X 53 POUND	LF	150	150		300
511.3000	PILE POINTS	EACH		8		8
511.6000.S	PILING STEEL PREBORING	LF	24			24
513.7050	RAILING STEEL TYPE W B-37-391	LS				1
516.0500	RUBBERIZED MEMBRANE WATERPROOFING	SY	7	7		14
606.0300	RIPRAP HEAVY	CY	50	50		100
645.0120	GEOTEXTILE FABRIC TYPE HR	SY	95	95		190
	NON-BID ITEMS					
	PREFORMED FILLER	SIZE	1/2" & 3/4"	1/2" & 3/4"		

8

BLOOM CONSULTANTS, LLC			
NO.	DATE	REVISION	BY

STATE OF WISCONSIN
DEPARTMENT OF TRANSPORTATION
STRUCTURES DESIGN SECTION

STRUCTURE B-37-391

CONST. SPEC.	2003	DRAWN BY	BAS	PLANS CK'D.	MSA

CROSS SECTION AND QUANTITIES

SHEET 2 OF 7

PLOTTED BY: bscave
DATE: 02/20/2006
FILE NAME: f:\Archived Projects (READ-ONLY)\B37-1244 CTH A Bridges\Cadd\Bridges\Cds\028W3-1142.dgn
PEN TABLE: v7 Structural.tbl

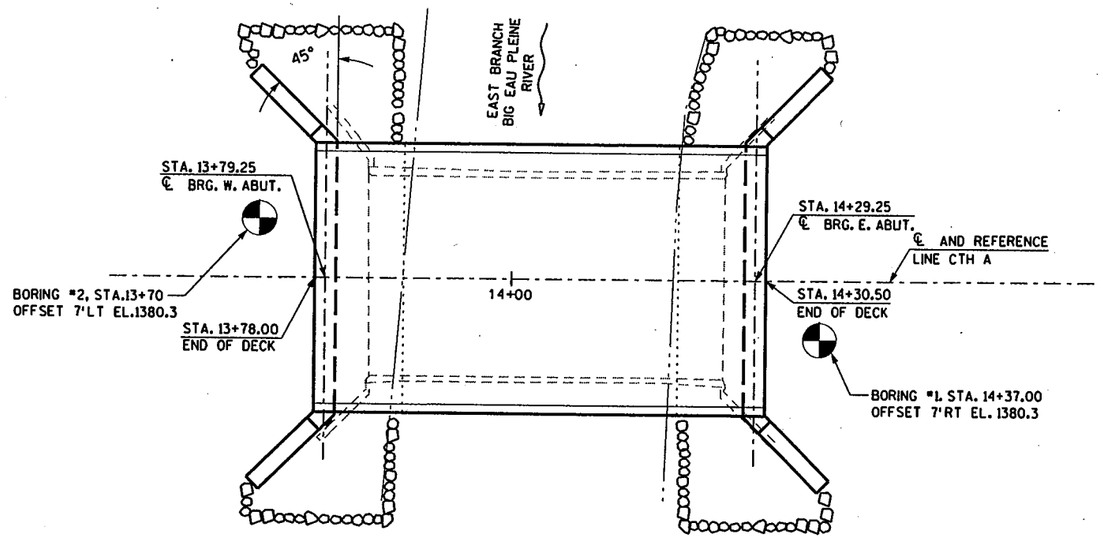

PLAN

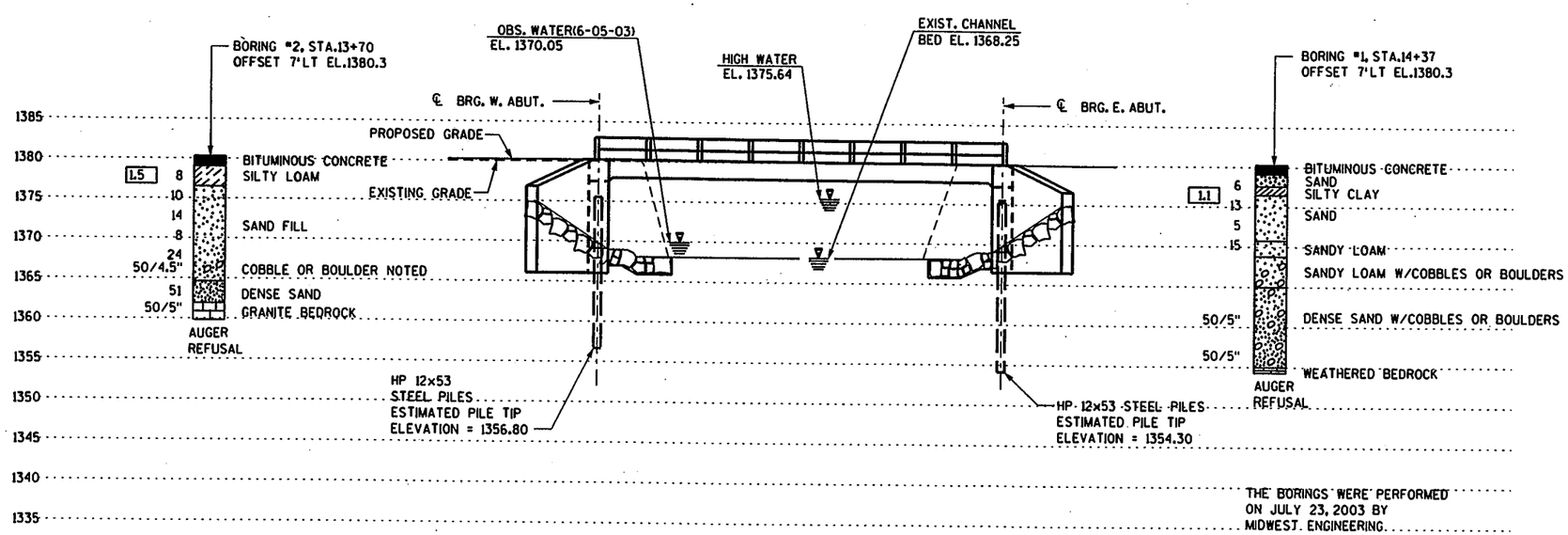

ELEVATION

STATE PROJECT NUMBER

9479-00-71

ABBREVIATIONS

F — FINE M — MEDIUM C — COARSE
WS — WEATHERED SO — SOUND

MATERIAL SYMBOLS

TOPSOIL, SILT, SANDSTONE, SAND, PEAT, LIMESTONE, GRAVEL, CLAY, IGNEOUS ROCK

LEGEND OF PROBING

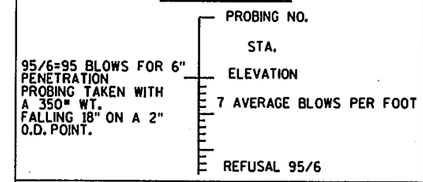

LEGEND OF BORING

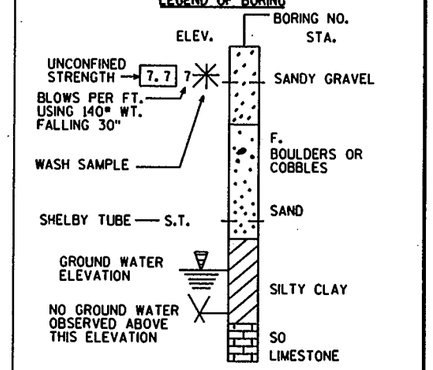

UNLESS OTHERWISE SPECIFIED, THE BLOWS PER FOOT AT THE LOCATIONS INDICATED ARE BASED ON DRIVING A 2" O.D. X 1.4" I.D. SPLIT SPOON SAMPLER WITH A 140# HAMMER HAVING A FREE FALL OF 30". THE BLOW COUNT IS TAKEN IN UNDISTURBED SOIL IMMEDIATELY BELOW A CASED OR OPEN HOLE ELIMINATING SIDE FRICTION ON THE DRIVE PIPE.

SUBSURFACE EXPLORATION FOR FOUNDATION DESIGN AND BIDDERS INFORMATION

TO OBTAIN RELATIVE DATA CONCERNING THE CHARACTER OF MATERIAL IN AND UPON WHICH THE FOUNDATION MIGHT BE BUILT, BORINGS AND/OR SOUNDINGS WERE MADE AT POINTS APPROXIMATELY AS INDICATED ON THIS DRAWING. THE DATA PRESENTED HEREIN REPRESENTS THE FINDINGS OF THE SUBSURFACE EXPLORATIONS MADE. HOWEVER, BECAUSE THE DEPTHS INVESTIGATED ARE LIMITED AND THE AREA OF THE BORINGS AND/OR SOUNDINGS IS VERY SMALL IN RELATION TO THE ENTIRE AREA, THE WISCONSIN DEPARTMENT OF TRANSPORTATION DOES NOT WARRANT CONDITIONS BELOW THE DEPTHS INVESTIGATED OR THAT THE CLASSIFICATION OF MATERIAL ENCOUNTERED IN THESE INVESTIGATIONS IS NECESSARILY TYPICAL OF THE ENTIRE SITE.

8

BLOOM CONSULTANTS, LLC

NO.	DATE	REVISION	BY

STATE OF WISCONSIN
DEPARTMENT OF TRANSPORTATION
STRUCTURES DESIGN SECTION

STRUCTURE B-37-391

CONST. SPEC.	2003	DRAWN BY	BAS	PLANS CK'D.	MSA

SUBSURFACE EXPLORATION

SHEET 3 OF 7

PLOTTED BY: basuve
DATE: 02/21/2006
FILE NAME: f:\Archived Projects\READ-ONLY\48MI-1244 CTH A Bridges\Cadd\Bridges\Cdsa03BMI-1142.dgn
PDN TABLE: v7 Structure.tbl

GENERAL TEXT .12

STATE PROJECT NUMBER
9479-00-71

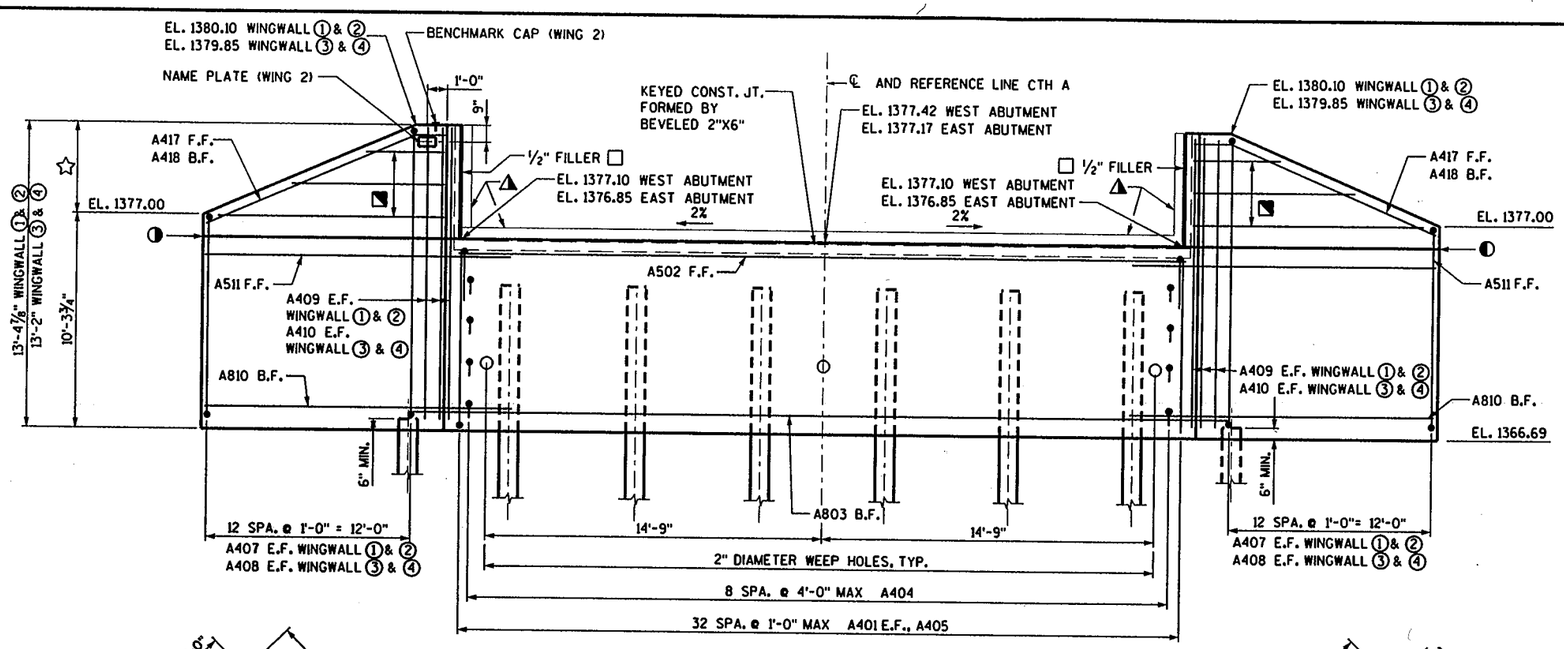

ELEVATION AT WEST ABUTMENT

LOOKING WEST
(EAST ABUTMENT SIMILAR)

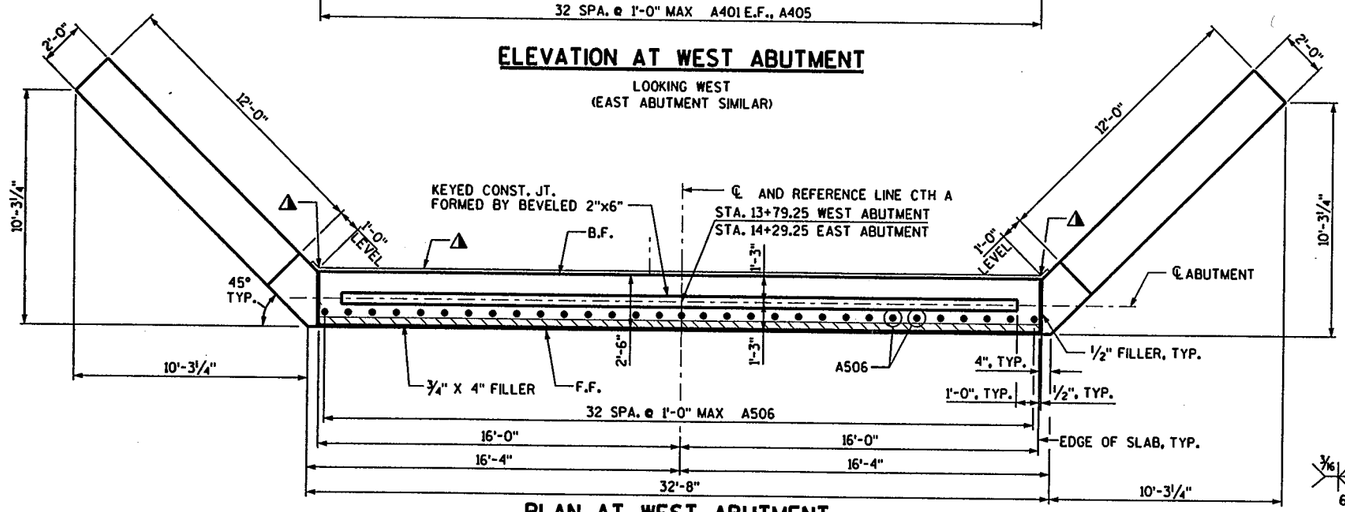

PLAN AT WEST ABUTMENT

(EAST ABUTMENT SIMILAR)

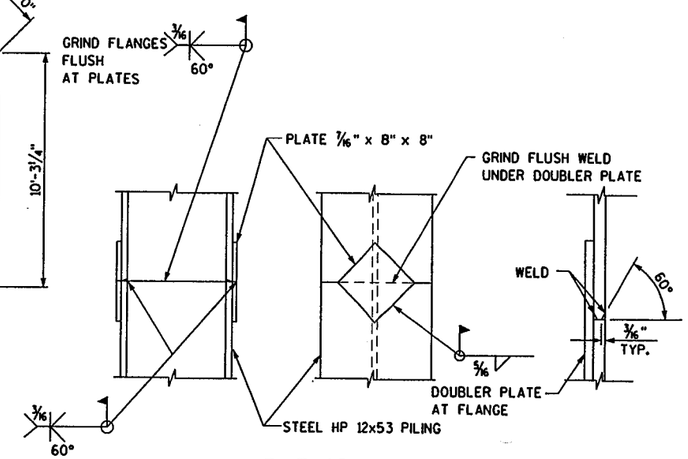

PILE SPLICE DETAIL

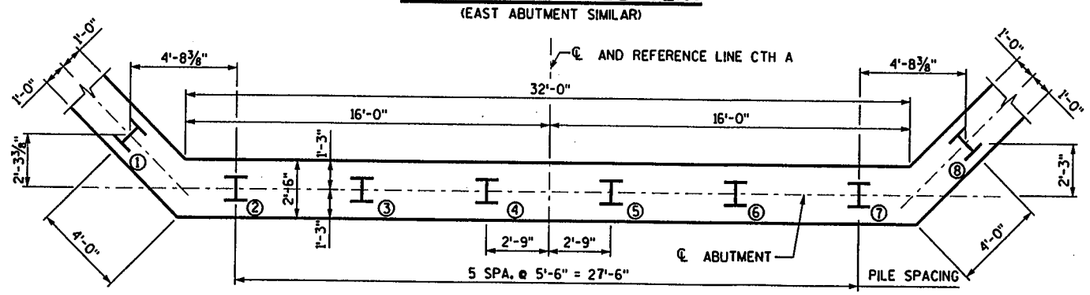

PILE LAYOUT AT WEST ABUTMENT

(EAST ABUTMENT SIMILAR)

NOTES

☐ SEAL ALL EXPOSED HORIZONTAL AND VERTICAL SURFACES OF ½" FILLER WITH NON-STAINING GRAY NON-BITUMINOUS JOINT SEALER. (1" DEEP AND HOLD ⅛" BELOW SURFACE OF CONCRETE).

DO NOT PLACE FILL ABOVE 3'-0" FROM BOTTOM OF ABUTMENT UNTIL SUPERSTRUCTURE IS IN PLACE.

◭ 18" RUBBERIZED MEMBRANE WATERPROOFING. SEAL ALL HORIZONTAL AND VERTICAL JOINTS ON BACKFACE.

◐ OPTIONAL KEYED CONSTRUCTION JOINT - FORMED BY BEVELED 2" X 6" WITH RUBBERIZED MEMBRANE WATERPROOFING ON E.F., TYP.

B.F. DENOTES BACK FACE
F.F. DENOTES FRONT FACE
E.F. DENOTES EACH FACE

◥ A413, F.F. WINGWALL ① & ②
A414, F.F. WINGWALL ③ & ④
A415, B.F. WINGWALL ① & ②
A416, B.F. WINGWALL ③ & ④

☆ 3'-1⅛" WINGWALL 1 & 2
2'-10 ¼" WINGWALL ③ & ④

8

BLOOM CONSULTANTS, LLC			
NO.	DATE	REVISION	BY

STATE OF WISCONSIN
DEPARTMENT OF TRANSPORTATION
STRUCTURES DESIGN SECTION

STRUCTURE B-37-391

CONST. SPEC.	2003	DRAWN BY	BAS	PLANS CK'D.	MSA

ABUTMENT PLAN AND ELEVATION

SHEET 4 OF 7

PLOTTED BY: bsouve
DATE: 02/21/2005
FILE NAME: f:\aarcd\ved Projects (READ-ONLY)\B-391-1244 CTH A Bridges\Codes\Bridges\Cds\04BW-1W2.dgn
PEN TABLE: v7 Structural.tbl

STATE PROJECT NUMBER
9479-00-71

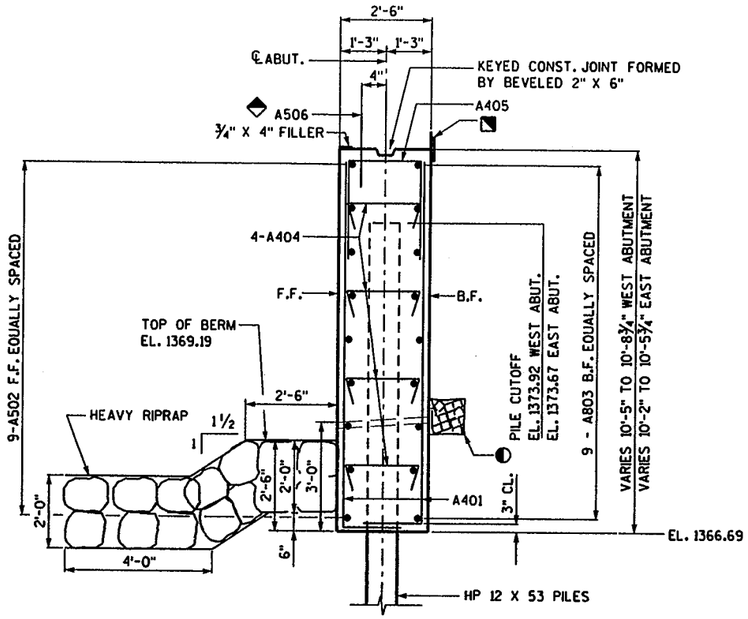

SECTION THRU ABUTMENT BODY

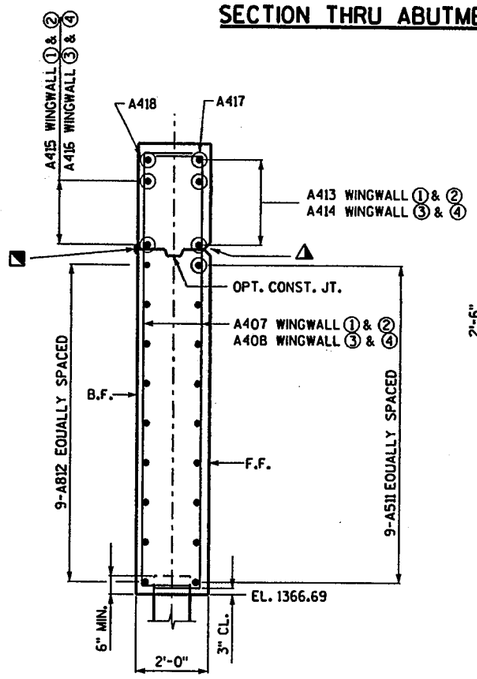

TYPICAL SECTION THRU WINGWALL

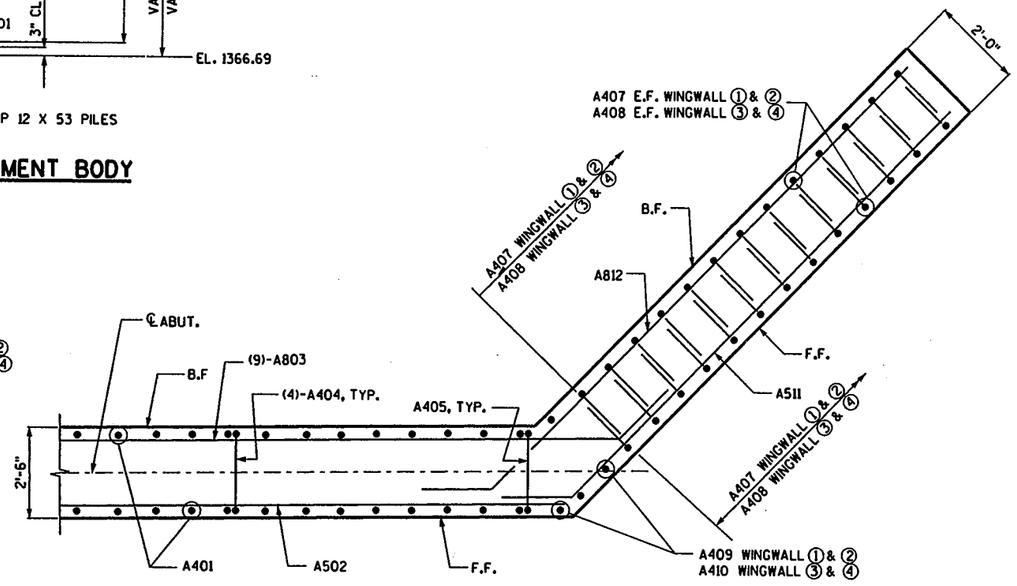

TYPICAL WINGWALL PLAN

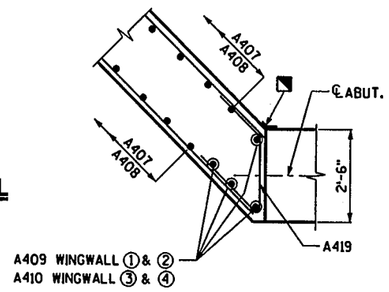

WINGWALL CORNER DETAIL

◆ THESE BARS MAY BE PLACED AFTER CONCRETE IS POURED, BUT BEFORE INITIAL SET HAS TAKEN PLACE.

◪ 18" RUBBERIZED MEMBRANE WATERPROOFING. SEAL ALL HORIZONTAL AND VERTICAL JOINTS ON BACKFACE

▲ 3/4" "V" GROOVE ON F.F. OF WINGWALL (NOT REQUIRED IF CONST. JOINT IS NOT USED)

◐ 2" DIA. WEEP HOLE. USE GEOTEXTILE FABRIC WITH SIZE 1 COARSE AGGREGATE AT EACH HOLE (ON B.F. 12" X 12" X 12" MIN.) COST INCIDENTAL TO "CONCRETE MASONRY, BRIDGES".

BAR SERIES TABLE

BAR MARK	NO. REQ'D	LENGTH
A407	4 SERIES OF 13	9'-11" TO 13'-0"
A408	4 SERIES OF 13	9'-11" TO 12'-9"
A413	2 SERIES OF 3	5'-2" TO 11'-1"
A414	2 SERIES OF 3	5'-4" TO 11'-5"
A415	2 SERIES OF 3	3'-7" TO 9'-5"
A416	2 SERIES OF 3	3'-9" TO 9'-10"

BILL OF BARS

	BAR MARK	COAT	NO. REQ'D	LENGTH	BENT	LOCATION
	A401		132	11'-3"	X	BODY VERT. E.F.
	A502		18	32'-4"		BODY HORIZ. F.F.
	A803		18	39'-6"	X	BODY HORIZ. B.F.
	A404		72	2'-9"	X	BODY TIES
	A405		66	11'-0"	X	BODY VERT. TOP
	A506	X	66	2'-6"		BODY DOWELS
☆	A407		52	11'-5"	X	WINGS 1 & 2 VERT. E.F.
☆	A408		52	11'-4"	X	WINGS 3 & 4 VERT. E.F.
	A409		8	13'-0"		WINGS 1 & 2 VERT. E.F.
	A410		8	12'-9"		WINGS 3 & 4 VERT. E.F.
	A511		36	15'-9"	X	WINGS HORIZ. F.F.
	A812		36	17'-6"	X	WINGS HORIZ. B.F.
☆	A413		6	8'-2"		WINGS 1 & 2 HORIZ. F.F.
☆	A414		6	8'-5"		WINGS 3 & 4 HORIZ. F.F.
☆	A415		6	6'-6"		WINGS 1 & 2 HORIZ. B.F.
☆	A416		6	6'-10"		WINGS 3 & 4 HORIZ. B.F.
	A417		4	14'-5"	X	WINGS DIAG. F.F.
	A418		4	12'-10"	X	WINGS DIAG. B.F.
	A419		12	4'-6"	X	WING HORIZ. CORNER

BILL OF BARS INCLUDES ALL BARS FOR BOTH ABUTMENTS.

☆ LENGTH SHOWN FOR BAR IS AN AVERAGE LENGTH AND SHOULD BE USED FOR BAR WEIGHT CALCULATIONS. SEE BAR SERIES TABLE FOR ACTUAL LENGTH

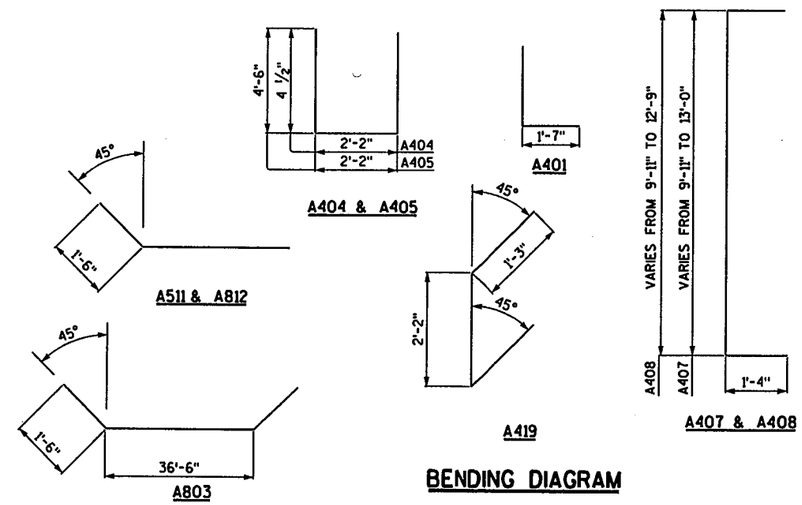

BENDING DIAGRAM

8

BLOOM CONSULTANTS, LLC			
NO.	DATE	REVISION	BY

STATE OF WISCONSIN
DEPARTMENT OF TRANSPORTATION
STRUCTURES DESIGN SECTION

STRUCTURE B-37-391

CONST. SPEC.	2003	DRAWN BY	BAS	PLANS CK'D.	MSA

ABUTMENT DETAILS

SHEET 5 OF 7

PLOTTED BY: bacaure
DATE: 4/22/2005
FILE NAME: P:\Bridge\Ved Projects (READ-ONLY)\BWI-244 CTH A Bridges\Codes\Bridges\Cds\05BWI-1W2.dgn
PEN TABLE: vf Structural.tbl

STATE PROJECT NUMBER
9479-00-71

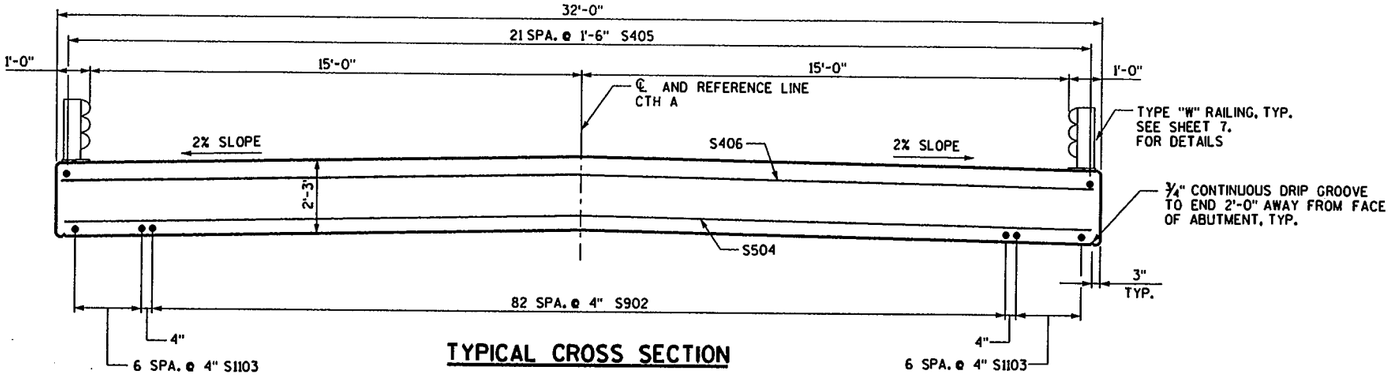

TYPICAL CROSS SECTION

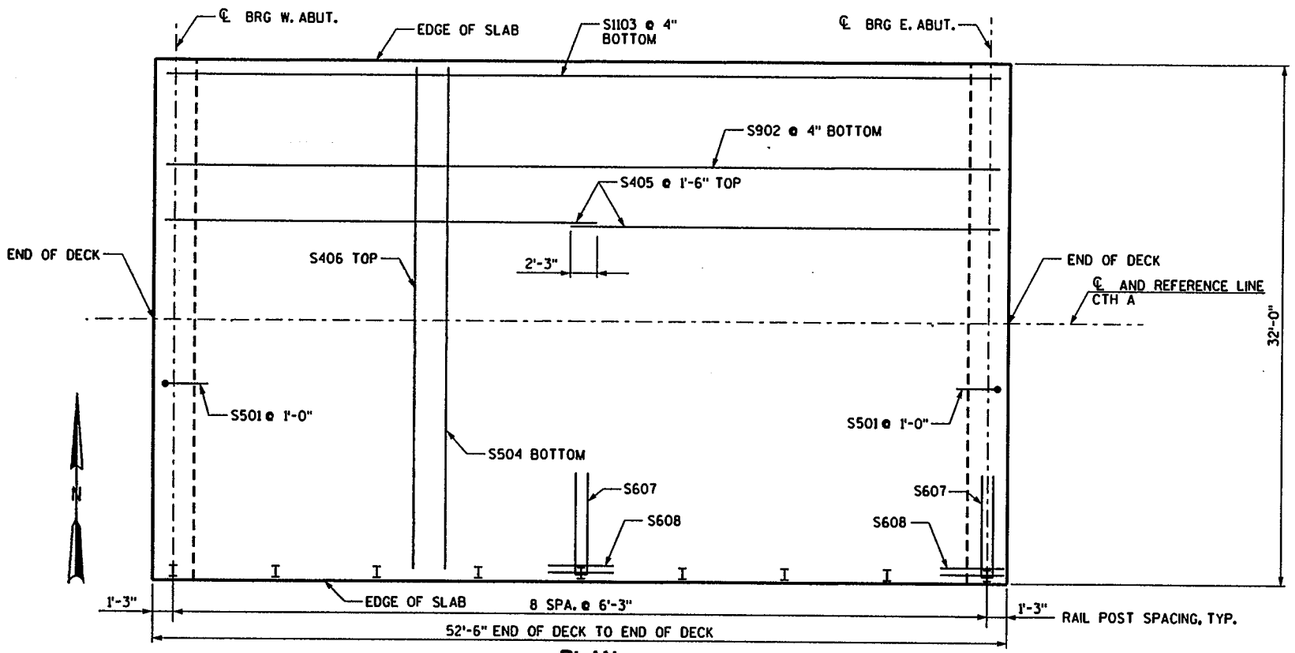

PLAN

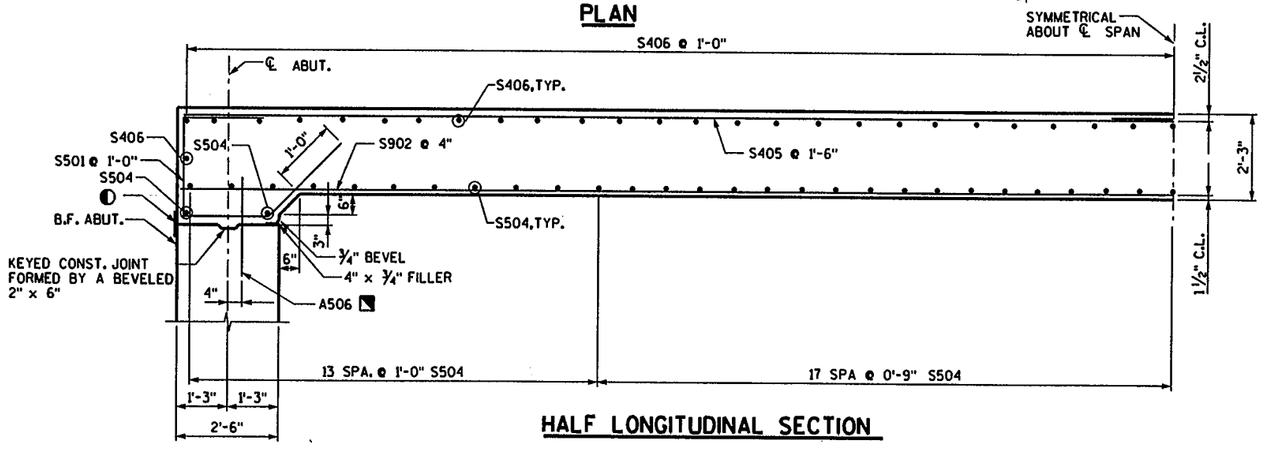

HALF LONGITUDINAL SECTION

NOTES

ALTERNATE TOP TRANSVERSE BARS IN SLAB SHALL BE SUPPORTED BY INDIVIDUAL BAR CHAIRS AT APPROXIMATELY 3'-0" CENTERS IN EACH WAY. BOTTOM LONGITUDINAL BARS SHALL BE SUPPORTED BY CONTINUOUS BAR CHAIRS AT APPROXIMATELY 4'-0" CENTERS.

ALL SLAB THICKNESS DIMENSIONS ARE MINIMUM. ANY TOLERANCES NECESSARY TO CORRECT CONSTRUCTION DISCREPANCIES ARE TO BE PLUS(+)

BILL OF BARS

BAR MARK	COAT	NO. REQ'D	LENGTH	BENT	LOCATION
S501	X	66	7'-10"	X	SLAB AT ABUTMENTS
S902	X	83	52'-2"		LONGITUDINAL SLAB, BOTTOM
S1103	X	14	52'-2"		LONGITUDINAL EDGE BEAM, BOTTOM
S504	X	61	31'-8"		TRANSVERSE, BOTTOM
S405	X	44	27'-2"		LONGITUDINAL SLAB, TOP
S406	X	53	31'-8"		TRANSVERSE, TOP
S607	X	18	12'-0"	X	RAILING TRANSVERSE
S608	X	36	4'-0"		RAILING LONGITUDINAL

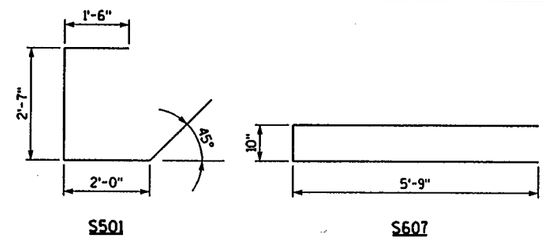

BENDING DIAGRAMS

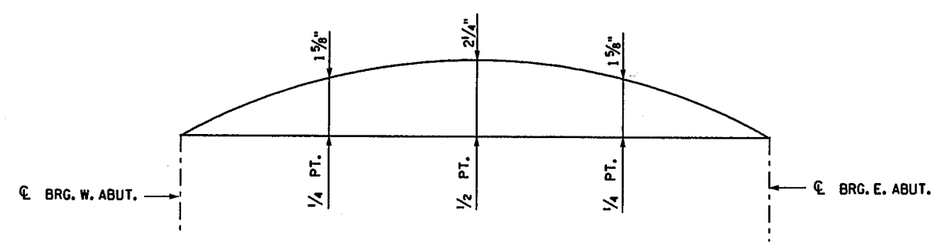

CAMBER DIAGRAM

NOTE: CAMBER AS SHOWN TO PROVIDE FOR DEAD LOAD DEFLECTION & FUTURE CREEP. CAMBER DOES NOT INCLUDE ALLOWANCE FOR FORM SETTLEMENT.

◐ 18" RUBBERIZED MEMBRANE WATERPROOFING. SEAL ALL HORIZONTAL AND VERTICAL JOINTS ON BACKFACE.

◪ BARS MAY BE PLACED AFTER CONC. HAS BEEN POURED BUT BEFORE INITIAL SET HAS TAKEN PLACE.

8

BLOOM CONSULTANTS, LLC

NO.	DATE	REVISION	BY

STATE OF WISCONSIN
DEPARTMENT OF TRANSPORTATION
STRUCTURES DESIGN SECTION

STRUCTURE B-37-391

CONST. SPEC.	2003	DRAWN BY	BAS	PLANS CK'D.	MSA

SUPERSTRUCTURE

SHEET 6 OF 7

PLOTTED BY: bsouve
DATE: 02/21/2006
FILE NAME: f:\archived Projects (READ-ONLY)\B41-1244 CTH A Bridges\Cdcd\Bridges\Cdcd06B41-1142.dgn
PEN TABLE: v7 Structural.tbl

STATE PROJECT NUMBER
9479-00-71

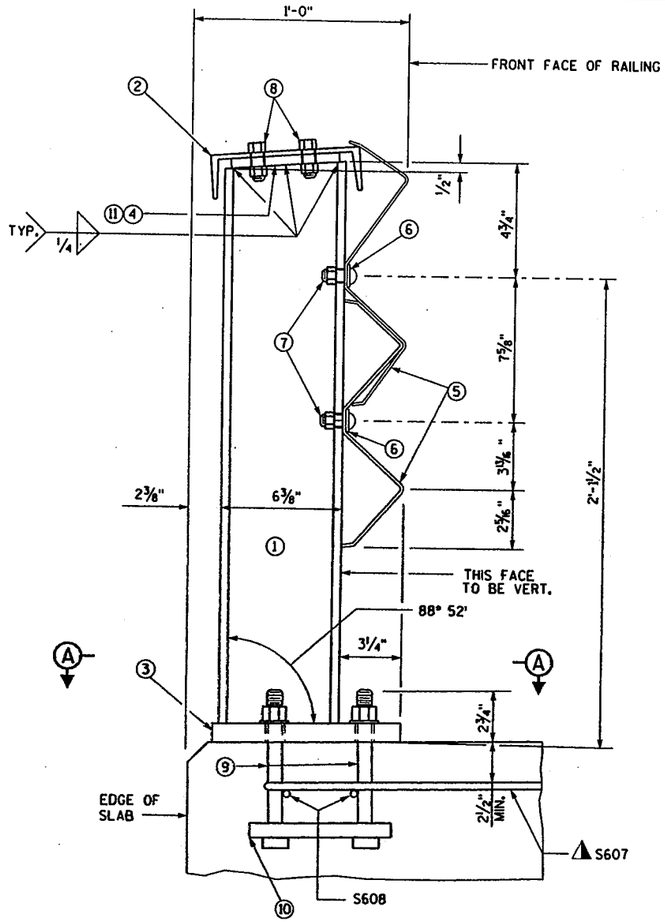

SECTION THRU RAILING

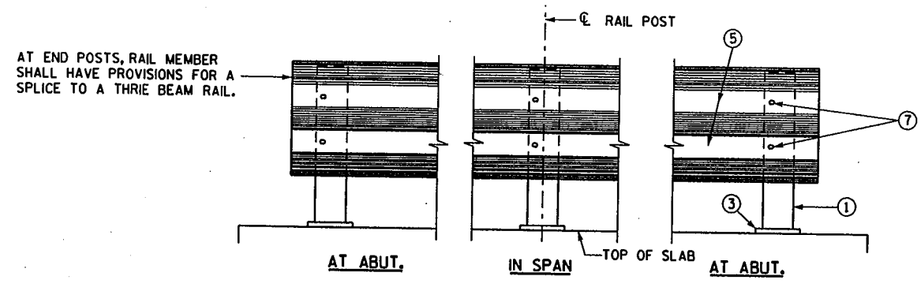

ELEVATION

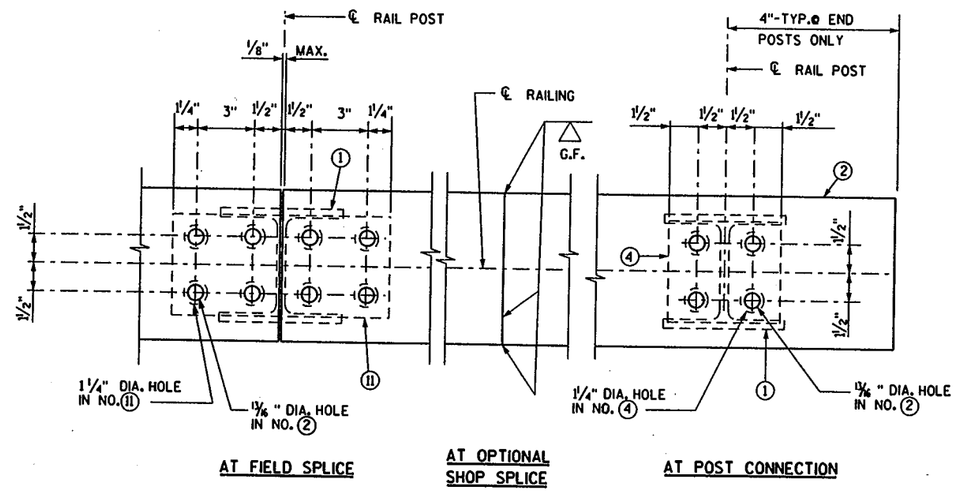

CHANNEL MEMBER DETAILS

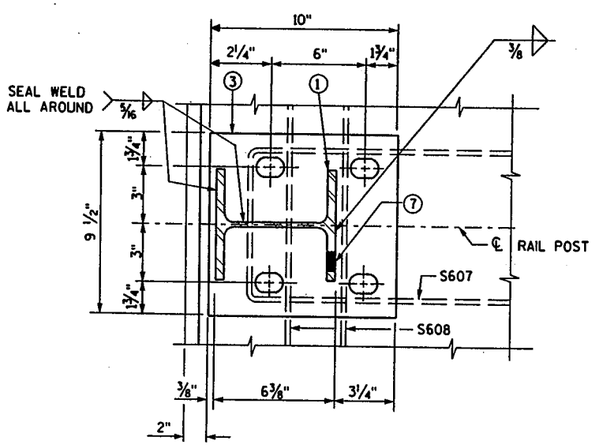

SECTION A

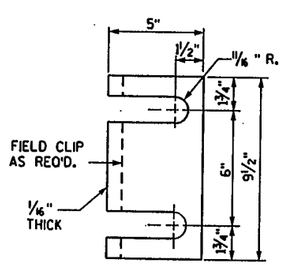

POST SHIM DETAIL
(4 PER POST)

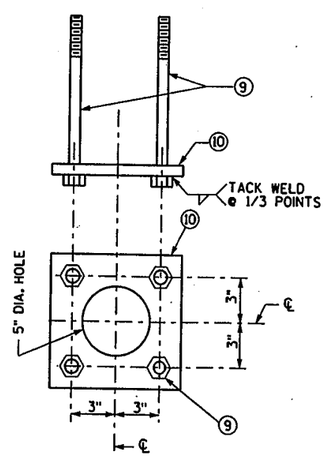

ANCHORAGE DETAIL

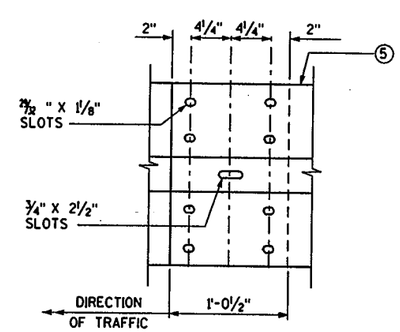

RAIL MEMBER SPLICE
5/8" DIA. BUTTON HEAD OVAL SHOULDER BOLTS WITH HEX. NUTS AT ALL SLOTS.

LEGEND

1. W6 X 25 WITH 2-3/4" X 2 1/2" VERTICAL SLOTS ON ONE SIDE OF POST FOR BOLT NO. 7. CUT BOTTOM OF POST TO MATCH CROSS SLOPE OF ROADWAY. PLACE POST VERTICAL AND NORMAL TO GRADE LINE.
2. C8 X 11.5, WITH 13/16" DIA. HOLES, ATTACH TO NO. 4 WITH BOLTS NO. 8. ATTACH CONTINUOUSLY TO A MIN. OF FOUR POSTS AND A MAX. OF EIGHT POSTS.
3. BASE PLATE 1" X 9 1/2" X 0'-10", WITH 11/16" X 1 1/2" SLOTTED HOLES FOR ANCHOR BOLTS NO. 9. WELD TO NO. 1 AS SHOWN.
4. PLATE 1/2" X 5 3/4" X 0'-6", WITH 1 1/4" DIA. HOLE FOR BOLTS NO. 8. WELD TO NO. 1 AS SHOWN
5. CORRUGATED SHEET BEAM, CONFORMING TO A.A.S.H.T.O. DESIGNATION M 180-CLASS A, TYPE 2. 'THRIE' GUARD RAIL OR EQUAL MAY BE USED IN LIEU OF THE DOUBLE UNIT PLATE BEAM SHOWN. ATTACH TO NO. 1 WITH BOLTS NO. 7.
6. 1 3/4" X 3" MOUNTING BOLT WASHER. EIGHT GAGE GALVANIZED.
7. 5/8" DIA. BUTTON HEAD RAIL MOUNTING BOLT WITH ROUND WASHER AND NUT. 2 PER POST REQUIRED.
8. 5/8" DIA. X 2" LG. HEX. BOLTS WITH NUT AND TWO WASHERS EACH. 4 REQUIRED PER POST CONNECTION, 8 REQUIRED PER SPLICE.
9. A325 -7/8" HEX BOLTS (GALVANIZED) WITH A325 NUT AND WASHER. 14" LONG AT END POSTS AND AT POSTS ON CONCRETE SLAB SUPERSTRUCTURES WHERE THE SLAB THICKNESS IS > 15". USE 8" LONG AT ALL OTHER LOCATIONS, 4 REQUIRED PER POST. THREAD 3" AND PLACE NORMAL TO PLATE NO. 3. CHAMFER TOP OF BOLTS BEFORE THREADING.
10. 1/4" X 8" X 8" FLAT BAR, WITH 15/16" DIA. HOLES FOR ANCHOR BOLTS NO. 9.
11. PLATE, 1/2" X 5 3/4" X 0'-11 1/2" WITH 1 1/4" DIA. HOLES FOR BOLTS NO. 8. WELD THE SAME AS NO. 4.

GENERAL NOTES

BID ITEM SHALL BE "RAILING STEEL TYPE "W" B-37-391" WHICH SHALL INCLUDE ALL ITEMS SHOWN.

POST BASE PLATES, NO. 3 SHALL BE FLAT WITH ALL SURFACES SMOOTH AND FREE FROM WARP AND ALL EDGES SMOOTH, STRAIGHT AND VERTICAL. ALL PLATE CUTS SHALL BE MACHINE OR MACHINE FLAME CUT.

ALL MATERIAL, EXCEPT ANCHORAGE DETAIL (NO. 9 & 10) SHALL BE GALVANIZED AFTER FABRICATION.

FILL BOLT SLOT OPENINGS IN POST SHIMS AND PLATE NO. 3 WITH NON-STAINING GRAY NON-BITUMINOUS JOINT SEALER.

ALL MATERIALS USED IN FABRICATION SHALL BE MADE FROM MATERIALS CONFORMING TO A.S.T.M. DESIGNATION A709 GRADE 36 UNLESS NOTED OTHERWISE.

SHIM PLATES 6" X 1/16" X 6" MAY BE USED BETWEEN TOP OF POST AND CHANNEL MEMEBER TO ACHIEVE VERTICAL ALIGNMENT.

STEEL POST SHIMS MAY BE USED UNDER POSTS WHERE REQUIRED FOR ALIGNMENT.

PRIOR TO GALVANIZING, ALL STEEL RAILING POSTS & CHANNELS SHALL BE GIVEN A NO. 6 COMMERCIAL BLAST CLEANING BY S.S.P.C. SPECIFICATIONS.

RAIL MEMBERS SHALL BE LAPPED IN THE DIRECTION OF TRAFFIC AND THE UPPER RAIL SHALL LAP THE LOWER RAIL.

△ TIE TO TOP MAT OF STEEL.

8

BLOOM CONSULTANTS, LLC

NO.	DATE	REVISION	BY

STATE OF WISCONSIN
DEPARTMENT OF TRANSPORTATION
STRUCTURES DESIGN SECTION

STRUCTURE B-37-391

CONST. SPEC.	2003	DRAWN BY	BAS	PLANS CK'D.	MSA

STEEL RAILING TYPE "W"

SHEET 7 OF 7

RAILW.DGN

PLOTTED BY: bsouve
DATE: 02/21/2006
FILE NAME: f:\arch\ved Projects (READ-ONLY)\BWI-1244 CTH A Bridges\Code\Bridges\Cds\07BWI-1192.dgn
PEN TABLE: v7 Structure.tbl

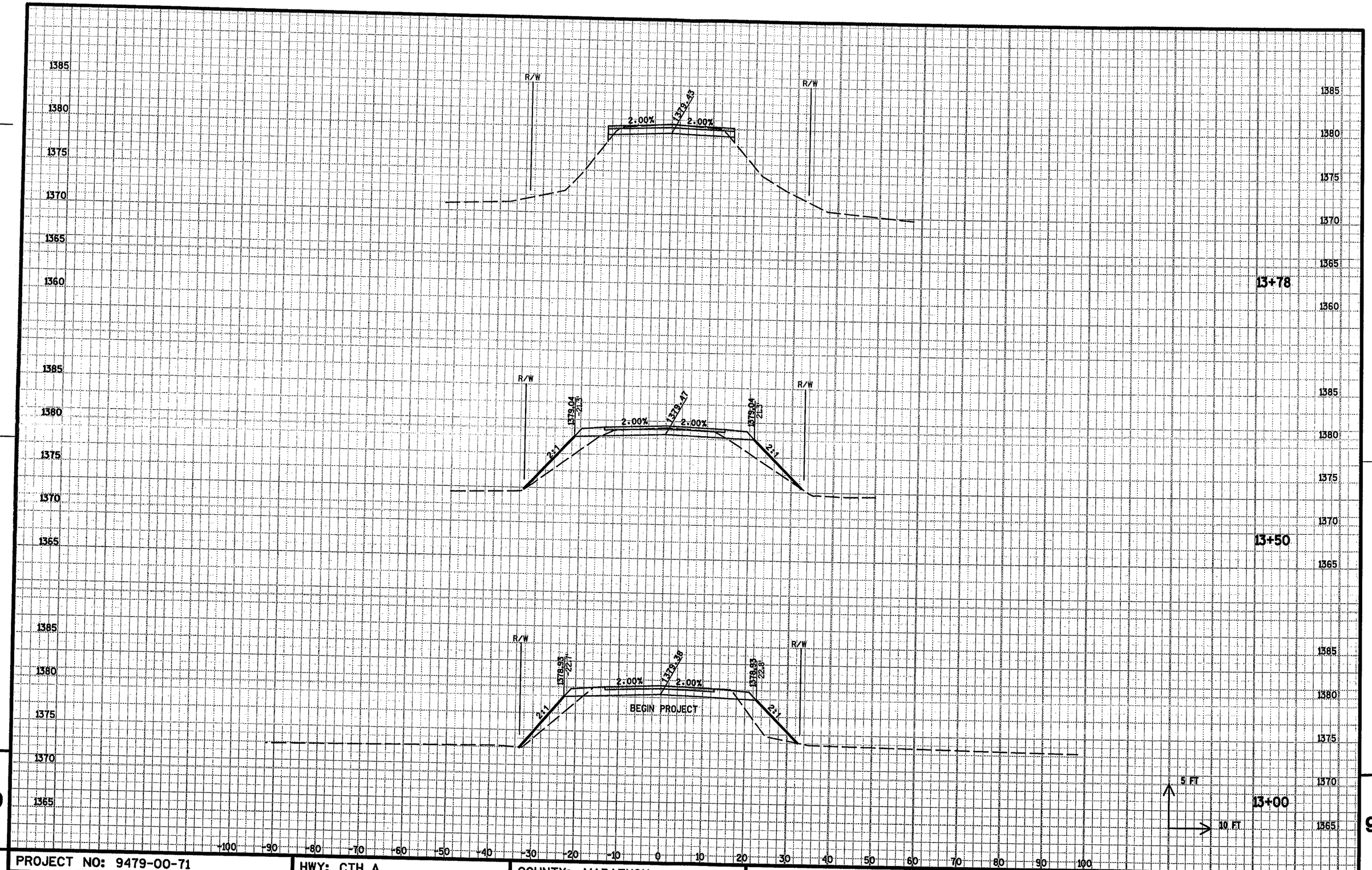

9

9

PROJECT NO: 9479-00-71	HWY: CTH A	COUNTY: MARATHON	CROSS SECTIONS: STATION 13+00 TO STATION 13+78	SHEET	E

FILE NAME : F:\BM1-1244\Cadd\Roads\V8_Cds\a090201_xs.dgn

PLOT DATE : 2/28/2006 PLOT TIME : 9:32:56 AM PLOT BY : ceven PLOT SCALE : 20.0000 FT / IN.

WISDOT/CADDS SHEET 21

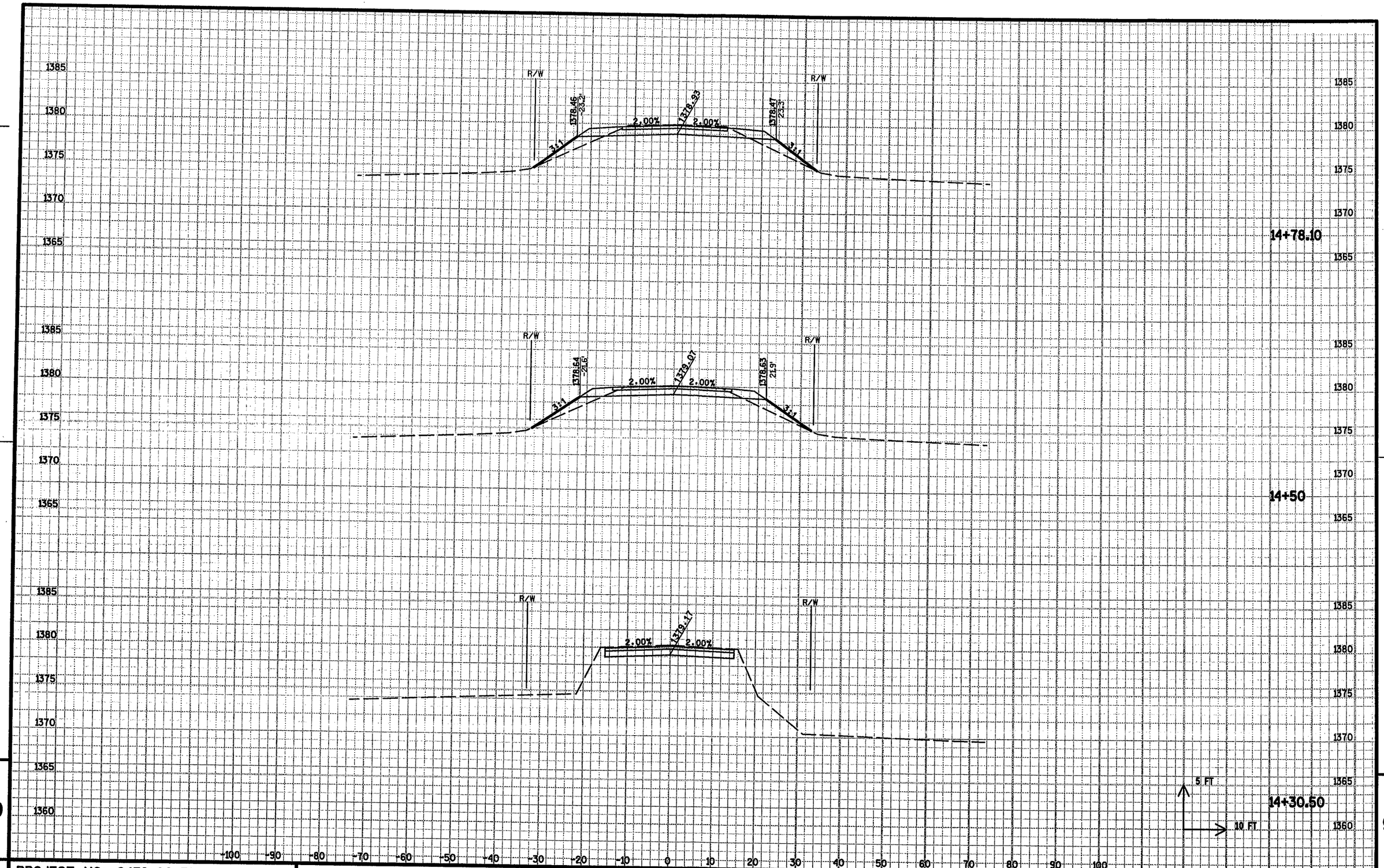

9

9

PROJECT NO: 9479-00-71 | HWY: CTH A | COUNTY: MARATHON | CROSS SECTIONS: STATION 14+30.50 TO STA 14+78.10 | SHEET | E

FILE NAME : F:\BM1-1244\Cadd\Roads\V8_Cds\a090201_xs.dgn

PLOT DATE : 2/28/2006 PLOT TIME : 9:33:10 AM PLOT BY : ceven PLOT SCALE : 20.0000 FT / IN.

WISDOT/CADDS SHEET 21