INDEX OF SHEETS

Sheet No.	1	Title
Sheet No.	2.1 – 2.68	Typical Sections and Details
Sheet No.		Estimate of Quantities
Sheet No.	3.A – 3.F	Miscellaneous Quantities
Sheet No.	4.1 – 4.9	Right of Way Plat
Sheet No.	5.1– 5.19	Plan and Profile
Sheet No.	6.1 – 6.43	Standard Detail Drawings
Sheet No.		Sign Plates
Sheet No.		Structure Plans
Sheet No.	9.1 – 9.3	Computer Earthwork Data
Sheet No.	9.4 – 9.84	Cross Sections

TOTAL SHEETS = 233

DESIGN DESIGNATION

A.D.T.	(2004)	=	7,160
A.D.T.	(2024)	=	13,800
D.H.V.	(2024)	=	730
D.	(2024)	=	58–42
T		=	9.3%
DESIGN SPEED		=	35/45 MPH
ESALS		=	2,299,500

CONVENTIONAL SYMBOLS

CORPORATE LIMITS
SECTION LINE
PROPERTY LINE
LOT LINE
LIMITED EASEMENT
EXISTING RIGHT OF WAY
PROPOSED OR NEW R/W LINE
SURVEY LINE
SLOPE INTERCEPT
ORIGINAL GROUND
MARSH OR ROCK PROFILE (To be noted as such)
MARSH AREA
WOODED OR SHRUB AREA

COMBUSTIBLE FLUIDS UNDERGROUND UTILITIES
GAS — G —
ELECTRIC — E —
TELEPHONE OR TELEGRAPH — T —
COMMUNICATIONS LINE — C —
SERVICE PEDESTAL
POWER POLE
TELEPHONE POLE
RAILROAD

	EXISTING	PROPOSED
SANITARY SEWER	SAN	
STORM SEWER	SS	
WATER	W	W
CULVERT (Box or Pipe)		
CULVERT (Profile View)		

STATE OF WISCONSIN
DEPARTMENT OF TRANSPORTATION

PLAN OF PROPOSED IMPROVEMENT

CTH N

CTH KK TO LILY LANE

MARATHON COUNTY

BEGIN PROJECT
6651-01-00
STATION 0+00
Y = 180,948.315
X = 269,963.236

STATE PROJECT NUMBER
6651–01–00

END PROJECT
6651-01-00
BEGIN PROJECT 6651-01-71
STATION 60+00.00
Y =182,445.302
X =274,882.904

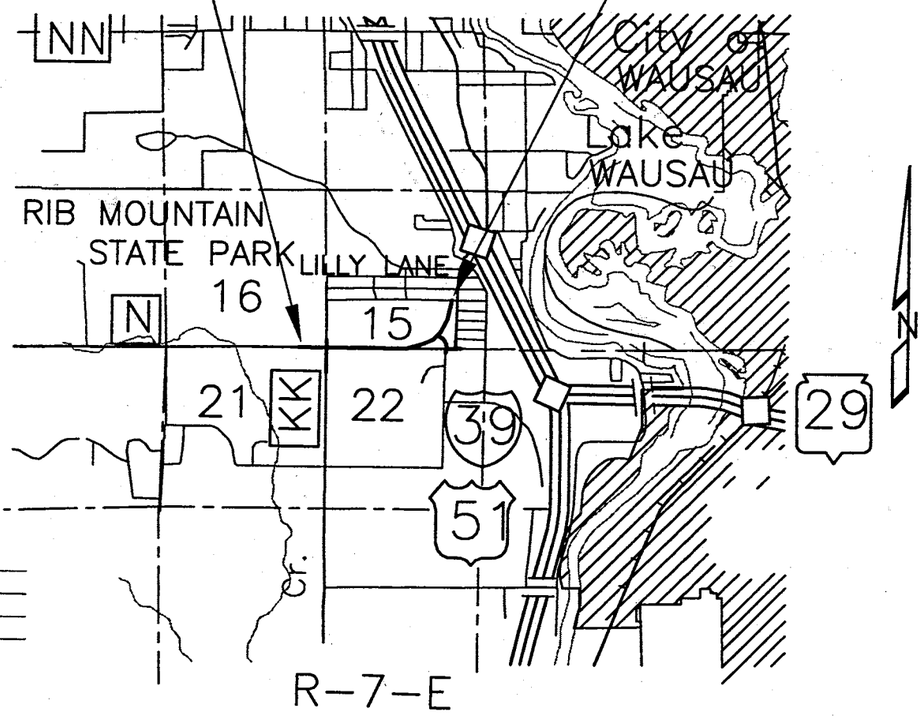

SCALE 0 0.5 mi

6651–01–00 NET LENGTH OF CENTERLINE = 1.136 mi URBAN

"Coordinates on this plan are referenced to the Wisconsin County Coordinate System (NAD 83, 1991), Marathon County.

STATE PROJECT	FEDERAL PROJECT	
	PROJECT	CONTRACT
6651–01–00		

ACCEPTED FOR
MARATHON COUNTY
BY

(Date) (Signature & Title of Official)

ORIGINAL PLANS PREPARED BY
CENTRAL WISCONSIN ENGINEERS & ARCHITECTS, INC.

WISCONSIN
JAMES R. DICKINSON
E-24004
WAUSAU, WIS.
PROFESSIONAL ENGINEER

2-26-04
(Date) (Signature)

STATE OF WISCONSIN
DEPARTMENT OF TRANSPORTATION

PREPARED BY
Surveyor TODD MROCHEK
Designer JIM DICKINSON
District Examiner CHARLIE DENU
District Supervisor MIKE O'MEARA
C.O. Examiner

APPROVED FOR DISTRICT OFFICE
DATE: (Signature)

AUTHORIZED FOR BUREAU OF HIGHWAY DEVELOPMENT
DATE: (Signature)

E

...DRAFT\28940101 CTH N KK TO LILY\TITLE Sh...eT.dwg, Layout1, 02/27/2004 02:36:10 PM

STANDARD DETAIL DRAWINGS

SSD NUMBER	TITLE
8A 5-16a	INLET COVERS, TYPE A, H, A-S, & H-S
8A 5-16b	INLET COVERS, TYPE B, B-A, C, MS-A, & WM
8A 5-16c	INLET COVERS, TYPE F, HM, HM-S, S, V, HM-GJ & HM-GJ-S
8A 5-16d	INLET COVER, TYPE2, MANHOLE COVERS, TYPE K, J, J-S, L, & M
8B 6-3	MANHOLES TYPE 1
8B 7-3	MANHOLES TYPE 2 & 3
8C 1-5	INLETS TYPE 1, 2, 3, & 4
8D 1-13	CONCRETE CURB, CONCRETE CURB & GUTTER AND PAVEMENT TIES
8D 4-3	CONCRETE SURFACE DRAIN & ASPHALTIC FLUME
8D 5-9a	CURB RAMPS TYPES 1,2 AND 3
8E 8-3	TYPICAL INSTALLATAIONS OF EROSION/TEMPORARY DITCH CHECKS
8E 9-5	SILT FENCE
8E 10-1	INLET PROTECTION TYPE A, B, AND C
8F 1-11	APRON ENDWALLS FOR CULVERT PIPE
8F 4-5	JOINT TIES FOR CONCRETE PIPE
8F 10-1	CONCRETE MASONRY ENDWALLS FOR CULVERT PIPE AND PIPE ARCH
8F 5-1	CLASS B BEDDING FOR CULVERT PIPE OR STORM SEWER
9B 2-6	CONDUIT
9B 3-2	CONDUIT FOR MAGNETIC DETECTOR
9B 4-5	PULL BOX
9C 2-2	CONCRETE BASES, TYPE 1, 2 & 5
9F 15-1b	LOOP DETECTOR INSTALLED IN BASE COURSE WITH PULL (SPLICE) BOX OFF ROADWAY (OPTION 2)
11B 2-1	CONCRETE MEDIAN NOSE
14B 15-4a	STEEL PLATE BEAM GUARD CLASS "A", INSTALLATION & ELEMENTS
14B 15-4b	STEEL PLATE BEAM GUARD CLASS "A", INSTALLATION & ELEMENTS
14B 16-3a	CLASS "A" STEEL PLATE BEAM GUARD END TREATMENT WITH ANCHORAGE, TYPE 2
14B 24-4a	STEEL PLATE BEAM GUARD ENERGY ABSORBING TERMINAL
15A 1-8	MARKER POST FOR RIGHT-OF-WAY
15C 2-4a&b	BARRICADES AND SIGNS FOR MAINLINE ROAD CLOSURES
15C 2-4c	DETOUR SIGNING FOR MAINLINE CLOSURES
15C 4-1	TRAFFIC CONTROL, ADVANCE WARING SIGNS 45 M.P.H. OR GREATER TWO-WAY UNDIVIDED ROAD OPEN TO TRAFFIC
15C 5-1	TRAFFIC CONTROL, ADVANCE WARING SIGNS 40 M.P.H. OR LESS TWO-WAY UNDIVIDED ROAD OPEN TO TRAFFIC
15C 7-6a	PAVEMENT MARKING SYMBOLS
15C 8-9a	PAVEMENT MARKING (MAINLINE)
15C 8-9d	PAVEMENT MARKING (LEFT TURN LANE)
15C 8-10e	PAVEMENT MARKING (ISLAND, STOP LINE & CROSS WALK)
15C 11-5	FLEXIBLE TUBULAR MARKER POST, ANCHOR & BASES
15C 12-2	TRAFFIC CONTROL FOR LANE CLOSURE (SUITABLE FOR MOVING OPERATIONS)
15D 6-2	TRAFFIC CONTROL, TWO LANE TWO-WAY OPERATION
15D 29-1	TRAFFIC CONTROL, VEHICLE ENTRANCE/EXIT OR HAUL ROAD
15D 20-1	TRAFFIC CONTROL, SINGLE LANE CLOSURE NON-FREEWAY/EXPRESSWAY

GENERAL NOTES

NO TREES OR SHRUBS ARE TO BE REMOVED WITHOUT APPROVAL OF THE ENGINEER. ENGINEER SHALL COORDINATE REMOVAL OF TREES WITH THE COUNTY FORESTER. CITY WILL REPLACE TREES REMOVED.

THE LOCATION OF EXISTING AND PROPOSED UTILITY INSTALLATIONS AS SHOWN ON THE PLANS ARE APPROXIMATE. THERE MAY BE OTHER UTILITY INSTALLATIONS WITHIN THE PROJECT AREA THAT ARE NOT SHOWN.

ALL BLENDING OF SLOPES BEHIND CONSTRUCTED SIDEWALKS SHALL BE TOPSOILED, FERTILIZED, AND SEEDED UNLESS OTHERWISE AUTHORIZED BY THE ENGINEER IN THE FIELD.

EROSION CONTROL IS THE SOLE RESPONSIBILITY OF THE CONTRACTOR.

DNR LIAISON

WISCONSIN DEPARTMENT OF NATURAL RESOURCES
473 GRIFITH AVE.
WISCONSIN RAPIDS, WI 54494
MR. CAMERON BUMP
PHONE: (715)-421-7867

UTILITIES

RIB MOUNTIAN SANITARY DISTRICT
5703 LILAC AVENUE
WAUSAU, WI 54401
MR. DARIN WESTOVER
PHONE: (715) 359-6177

VERIZON NORTH, INC.
521 FOURTH ST.
WAUSAU, WI 54403-4869
MS. JANET MITWEDE
PHONE: (715)-847-1500

CHARTER COMMUNICATIONS
853 McINTOSH STREET
WAUSAU, WI 54402-1818
MR. JEFF KALUSKI
PHONE: (715)-574-8241 CELL

DIGGERS HOTLINE
TOLL FREE (800) 242-8511
MILWAUKEE AREA (414) 259-1181
HEARING IMPAIRED TDD (800) 542-2289
www.DiggersHotline.com

WISCONSIN PUBLIC SERVICE CORP.
700 NORTH ADAMS STREET
GREEN BAY, WI 5407-9001
MS. LORI BUTRY
PHONE: (920) 433-1703

WISCONSIN PUBLIC SERVICE CORP.
1700 SHERMAN STREET
WAUSAU, WI 54402-1166
MR. DEE MEDHIN
PHONE: (715) 848-7364

WISCONSIN PUBLIC SERVICE CORP.
1700 SHERMAN STREET
WAUSAU, WI 54402-1166
MR. CLAYTON VIRCKS
PHONE: (715) 848-7317

QWEST COMMUNICATION NETWORK
W329 N4072 LAKELAND DRIVE
NASHOTAH, WI 53058
MR. GENE BLEUEL
PHONE: (920) 960-6003

STANDARD ABBREVIATIONS

AGG	AGGREGATE
AH	AHEAD
ASPH	ASPHALTIC
AC	ASPHALT CEMENT
AVG	AVERAGE
ADT	AVERAGE DAILY TRAFFIC
BK	BACK
BM	BENCHMARK
BOC	BACK OF CURB
BOW	BACK OF WALK
CB	CATCH BASIN
C/L	CENTERLINE
CONC	CONCRETE
D	DEGREE OF CURVE
DHV	DESIGN HOUR VOLUME
DISCH.	DISCHARGE
D	DIRECTIONAL DISTRIBUTION
E	EAST
E.B.	EAST BOUND
X	EAST GRID COORDINATE
ELEC	ELECTRIC
ELEV	ELEVATION
EXC	EXCAVATION
EBS	EXCAVATION BELOW SUBGRADE
EXIST	EXISTING
FERT	FERTILIZER
FND	FOUND
F/L	FLOW LINE
HES	HIGH EARLY STRENGTH
CWT	HUNDREDWEIGHT
HYD	HYDRANT
IN	INLET
INV	INVERT
IP	IRON PIPE
L	LENGTH OF CURVE
LS	LUMP SUM
LT	LEFT
MAINT	MAINTENANCE
MATL	MATERIAL
MH	MANHOLE
N	NORTH
N.B.	NORTH BOUND
N0R	NORMAL
Y	NORTH GRID COORDINATE
PE	PRIVATE ENTRANCE
R	RADIUS
R/L	REFERENCE LINE
RCP	REINFORCED CONCRETE PIPE
REQ'D	REQUIRED
RT	RIGHT
R/W	RIGHT-OF-WAY
SAN	SANITARY SEWER
S	SOUTH
S.B.	SOUTH BOUND
SHES	SPECIAL HIGH EARLY STRENGTH
SPECS	SPECIFICATIONS
SDD	STANDARD DETAIL DRAWINGS
STH	STATE TRUNK HIGHWAY
STA	STATION
SS	STORM SEWER
SE	SUPER ELEVATION
T	TANGENT
TEL	TELEPHONE
TLE	TEMPORARY LIMITED EASEMENT
TC	TOP OF CURB
T	TRUCKS (PERCENT OF)
TYP	TYPICAL
UG	UNDERGROUND
UNCL	UNCLASSIFIED
VAR	VARIABLE
V	VELOCITY OF DESIGN SPEED
VC	VERTICAL CURVE
WB	WEST BOUND
WM	WATERMAIN
WV	WATER VALVE
W	WEST
W	WATER

P:\DRAFT\28940101 CTH N KK TO LILY\GENERALNOTES.dwg, Layout1, 2/20/2004 2:13:31 PM

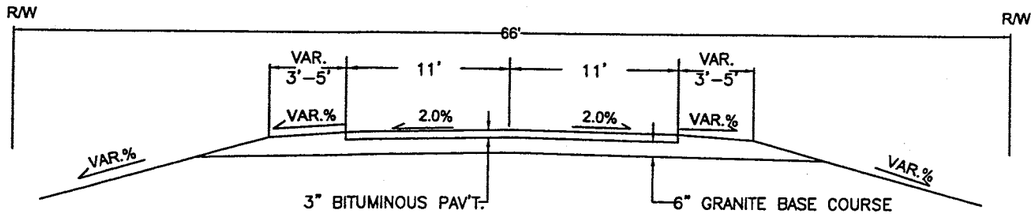

TYPICAL EXISTING SECTION SIDE ROADS,
SO. MOUNTIAN RD. AND CLOVER ROAD

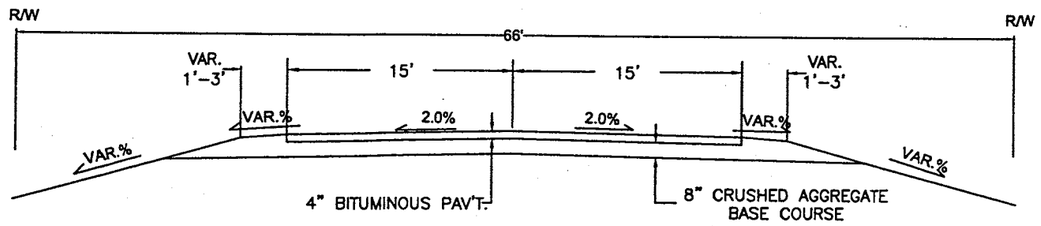

TYPICAL EXISTING SECTION SIDE ROAD
RIB MOUNTIAN DRIVE

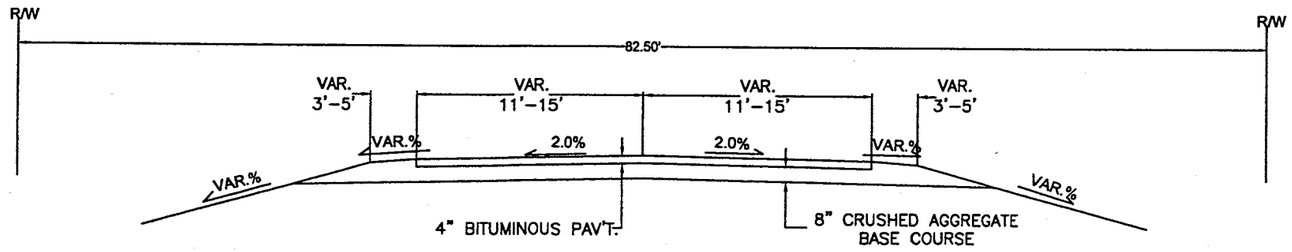

TYPICAL EXISTING SECTION
CTH N, CTH KK AND BITTERSWEET RD.

STATE PROJECT NUMBER: 6651–01–00	HWY: CTH N	COUNTY: MARATHON	TYPICAL SECTIONS	SHEET NO: 2.2	E

P:\DRAFT\28940101 CTH N KK TO LILY\EXIST Typ Sections.dwg, EXISTING, 10/28/2002 10:04:12 AM

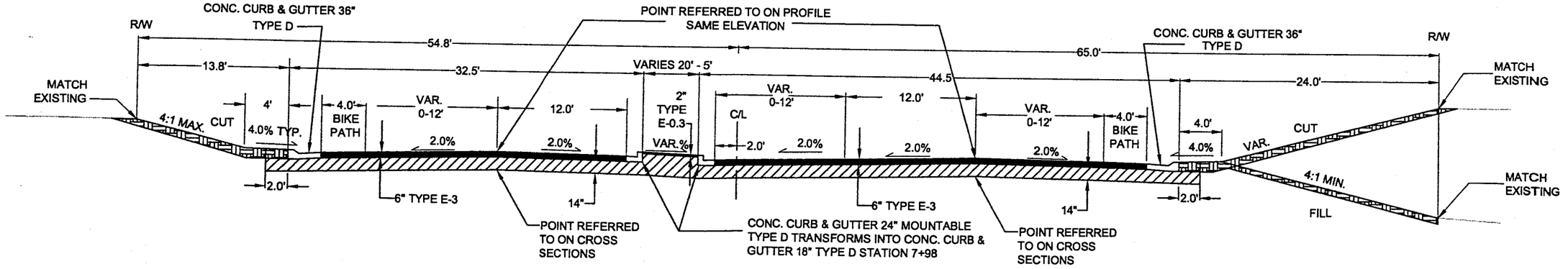

TYPICAL SECTION STATION 6+18 TO 10+75.46

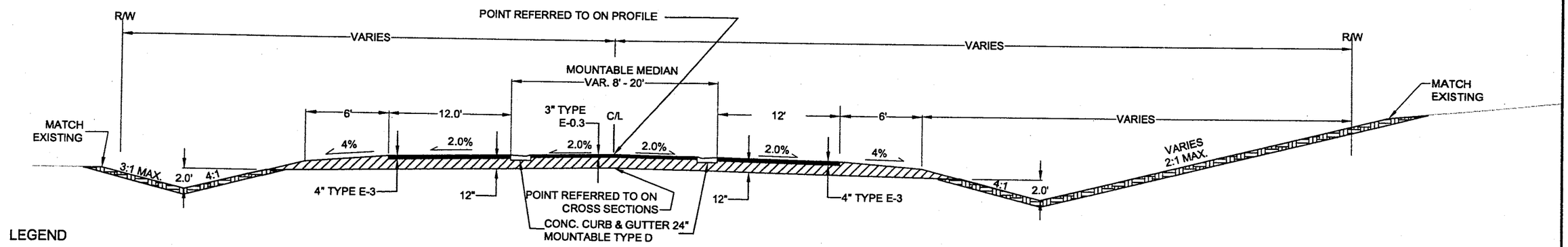

LEGEND

- ASPHALTIC CONCRETE PAVEMENT
- CRUSHED AGGREGATE BASE COURSE
- 4 INCH TOPSOIL, FERTILIZER, SEED AND MULCH

NOTE: EROSION CONTROL FABRIC REQUIRED ON 3:1 SLOPES OR GREATER, INPLACE OF MULCH.

TYPICAL SECTION STATION 2+50 TO 6+18

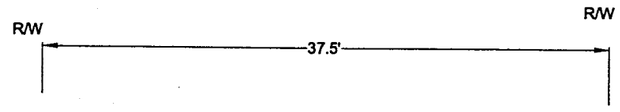

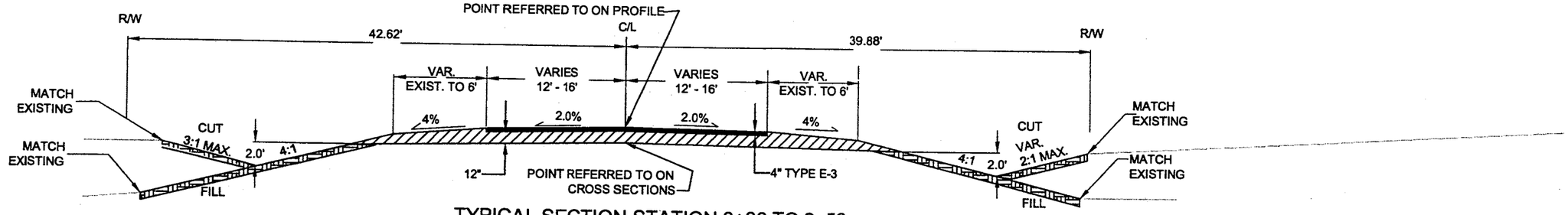

TYPICAL SECTION STATION 0+00 TO 2+50

STATE PROJECT NUMBER: 6651-01-00	HWY: CTH N	COUNTY: MARATHON	TYPICAL SECTIONS	SHEET NO: 2.3	E

P:\DRAFT\28940101 CTH N KK TO LILY\PROP Typ Sections1.dwg, SECTION 1, 10/06/2003 07:04:54 AM

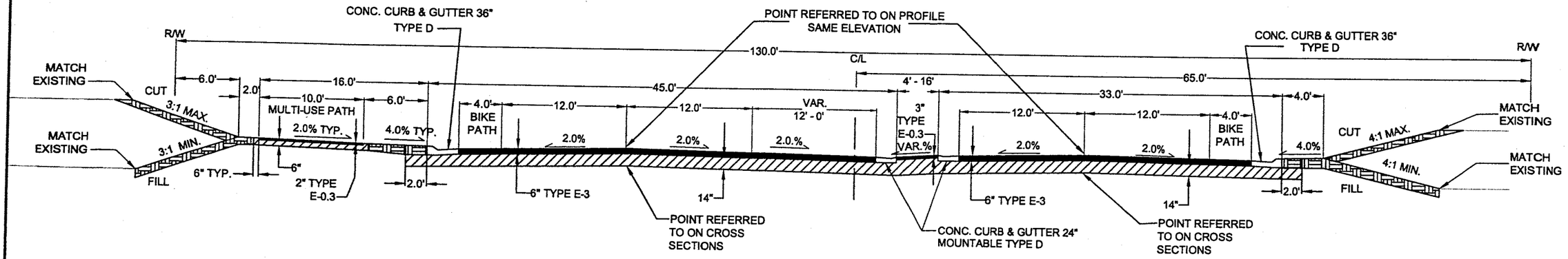

TYPICAL SECTION STATION 12+31 TO 15+05
AND STATION 21+18 TO 24+03.18

LEGEND

- ASPHALTIC CONCRETE PAVEMENT
- CRUSHED AGGREGATE BASE COURSE
- 4 INCH TOPSOIL, FERTILIZER, SEED AND MULCH

NOTE: EROSION CONTROL FABRIC REQUIRED ON 3:1 SLOPES OR GREATER, INPLACE OF MULCH.

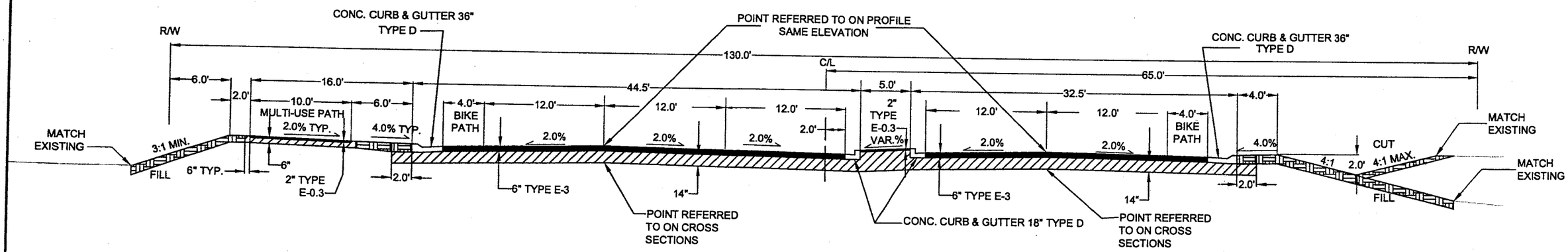

TYPICAL SECTION STATION 10+75.46 TO 12+31

STATE PROJECT NUMBER: 6651-01-00	HWY: CTH N	COUNTY: MARATHON	TYPICAL SECTIONS	SHEET NO: 2.4	E

P:\DRAFT\28940101 CTH N KK TO LILYPROP Typ Sections1.dwg, SECTION 2, 10/06/2003 07:07:55 AM

319 B
24 171 4D

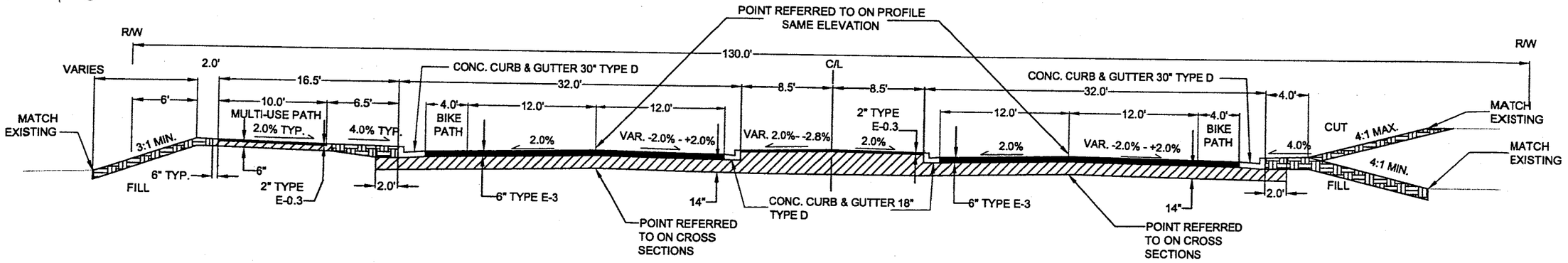

TYPICAL SECTION STATION 37+73 TO 40+33
SUPER ELEVATION TRANSITION BEGINS STA. 37+73

LEGEND

- ASPHALTIC CONCRETE PAVEMENT
- CRUSHED AGGREGATE BASE COURSE
- 4 INCH TOPSOIL, FERTILIZER, SEED AND MULCH

NOTE: EROSION CONTROL FABRIC REQUIRED ON 3:1 SLOPES OR GREATER, INPLACE OF MULCH.

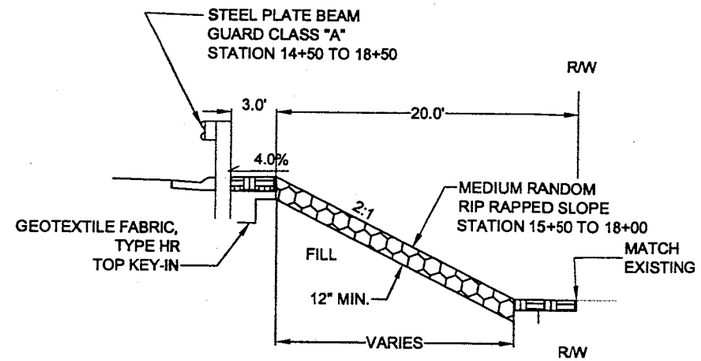

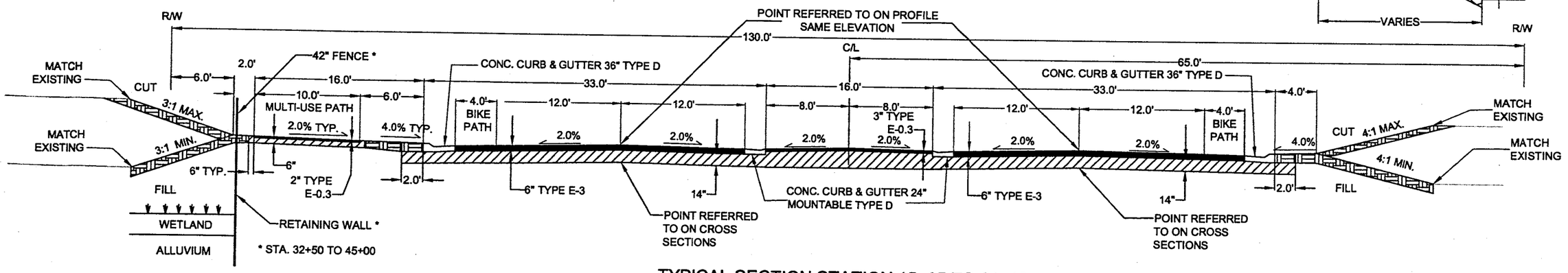

TYPICAL SECTION STATION 15+05 TO 21+18
AND STATION 24+03.18 TO 37+73

STATE PROJECT NUMBER: 6651-01-00	HWY: CTH N	COUNTY: MARATHON	TYPICAL SECTIONS	SHEET NO: 2,5	E

P:\...T\28...\CTH...\TO LIE...\OP Typ Sections1.dwg, SECTION 3, 10/06/2003 07:53:43 AM

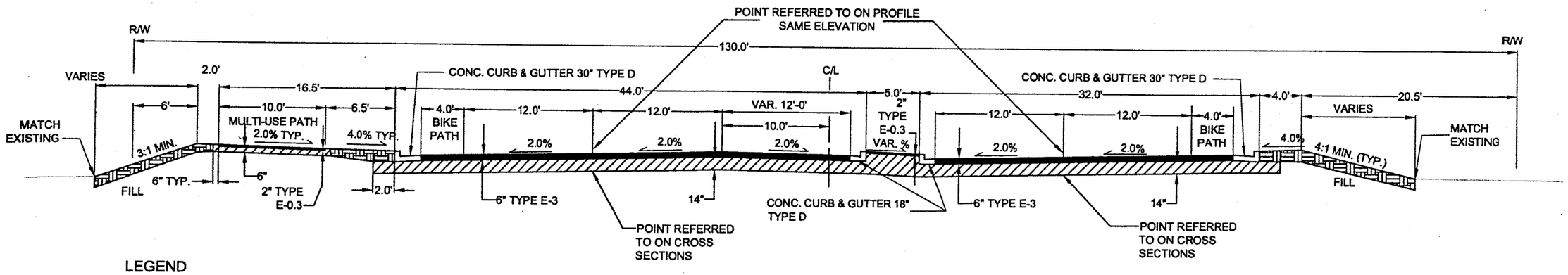

LEGEND

- ASPHALTIC CONCRETE PAVEMENT
- CRUSHED AGGREGATE BASE COURSE
- 4 INCH TOPSOIL, FERTILIZER, SEED AND MULCH

NOTE: EROSION CONTROL FABRIC REQUIRED ON 3:1 SLOPES OR GREATER, INPLACE OF MULCH.

TYPICAL SECTION STATION 47+92.6 TO 52+04
MAXIMUM SUPER ELEVATION ENDS STA. 52+04

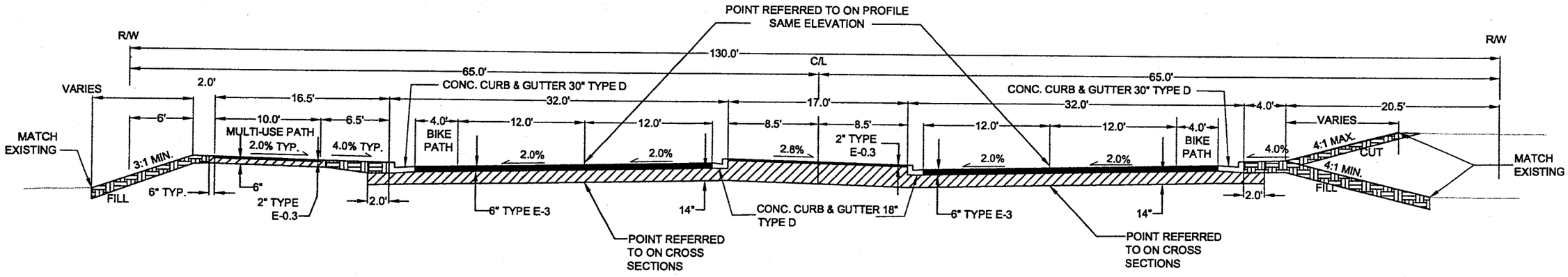

TYPICAL SECTION STATION 40+33 TO 47+92.6
MAXIMUM SUPER ELEVATION BEGINS STA. 40+33

STATE PROJECT NUMBER: 6651-01-00	HWY: CTH N	COUNTY: MARATHON	TYPICAL SECTIONS	SHEET NO: 2.6	E

P:\DRAFT\28940101 CTH N KK TO LILYPROP Typ Sections1.dwg, SECTION 4, 10/06/2003 07:54:30 AM

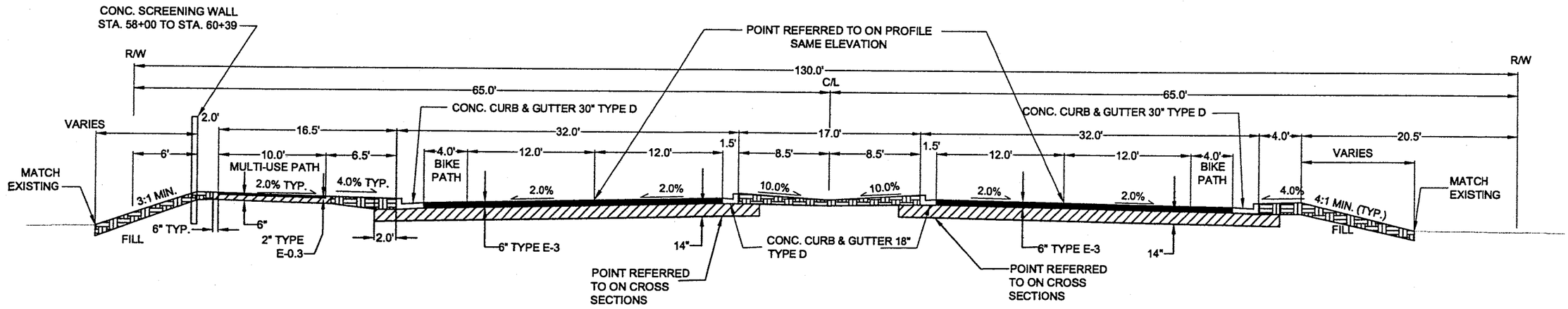

TYPICAL SECTION STATION 54+64 TO 60+00
END PROJECT 6651-01-00, BEGIN PROJECT 6651-01-71

LEGEND

- ASPHALTIC CONCRETE PAVEMENT
- CRUSHED AGGREGATE BASE COURSE
- 4 INCH TOPSOIL, FERTILIZER, SEED AND MULCH

NOTE: EROSION CONTROL FABRIC REQUIRED ON 3:1 SLOPES OR GREATER, INPLACE OF MULCH.

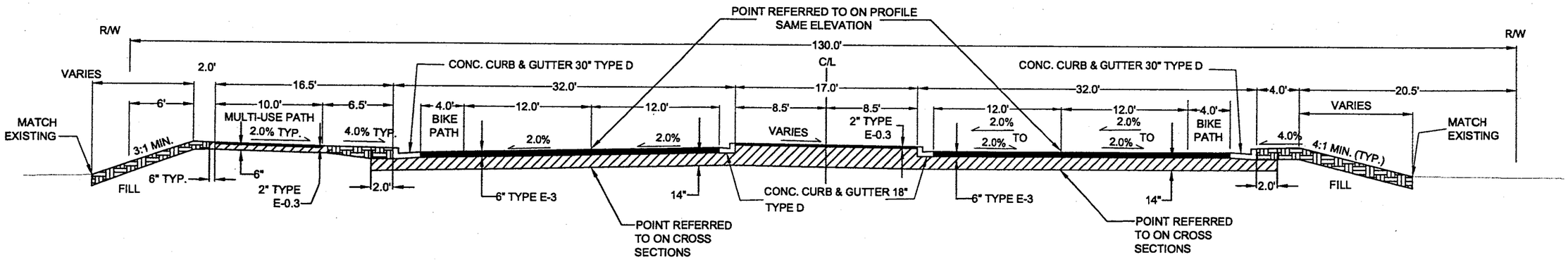

TYPICAL SECTION STATION 52+04 TO 54+64

STATE PROJECT NUMBER: 6651-01-00	HWY: CTH N	COUNTY: MARATHON	TYPICAL SECTIONS	SHEET NO: 2.7	E

P:\DRAFT\28940101 CTH N KK TO LILYPROP Typ Sections1.dwg, SECTION 5, 10/08/2003 07:58:48 AM

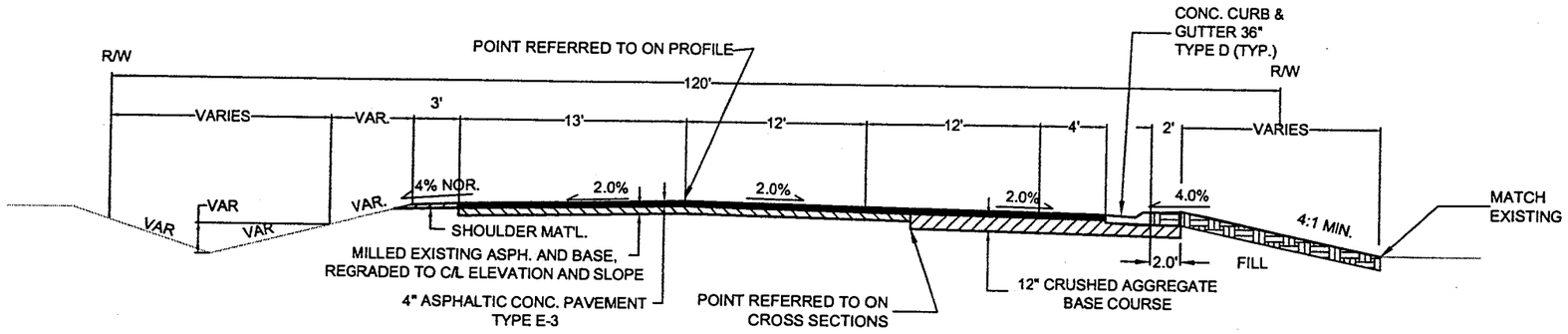

LEGEND

ASPHALTIC CONCRETE PAVEMENT

CRUSHED AGGREGATE BASE COURSE

4 INCH TOPSOIL, FERTILIZER, SEED AND MULCH

NOTE: EROSION CONTROL FABRIC REQUIRED ON 3:1 SLOPES OR GREATER, INPLACE OF MULCH.

TYPICAL SECTION
CTH KK, BITTERSWEET ROAD STA. 12+10 - STA. 21+50

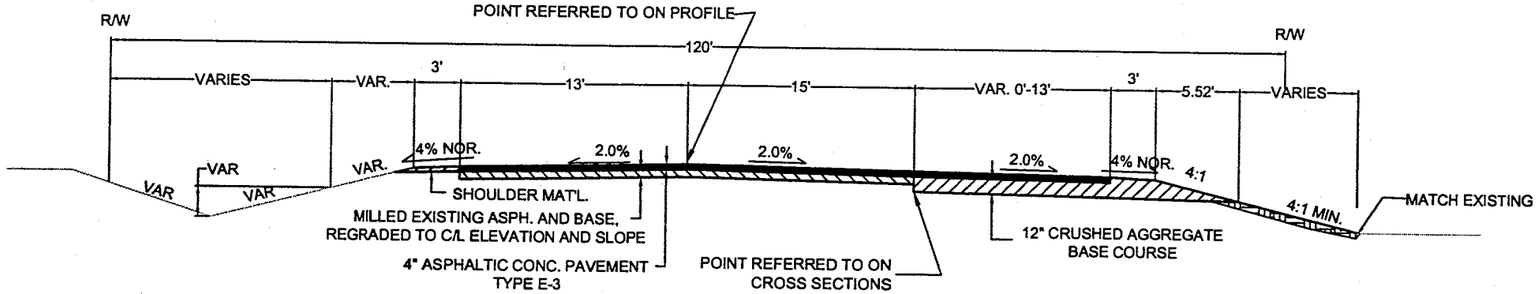

TYPICAL SECTION
CTH KK, BITTERSWEET ROAD STA. 10+00 - STA. 12+10

P:\DRAFT\28940101 CTH N KK TO LILY\EXIST Typ Sections.dwg, CTH KK, 2/20/2004 11:54:42 AM

STATE PROJECT NUMBER: 6651-01-00	HWY: CTH N	COUNTY: MARATHON	TYPICAL SECTIONS	SHEET NO: 2.8	E

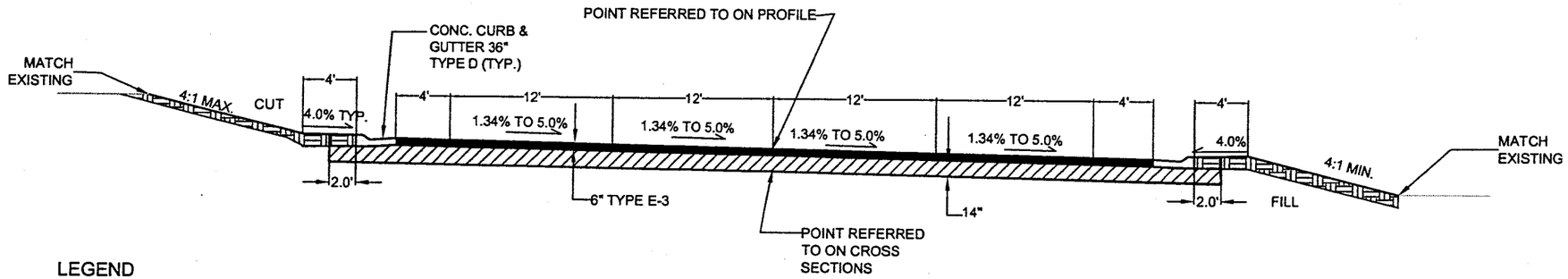

LEGEND

- ASPHALTIC CONCRETE PAVEMENT
- CRUSHED AGGREGATE BASE COURSE
- 4 INCH TOPSOIL, FERTILIZER, SEED AND MULCH

NOTE: EROSION CONTROL FABRIC REQUIRED ON 3:1 SLOPES OR GREATER, INPLACE OF MULCH.

TYPICAL SECTION
CTH KK STA. 24+03.47 - 24+62

NOTE: TRANSITION PAVEMENT AND BASE COURSE THICKNESS DIFFERENCES WITHIN 10 FEET OF JOINT.

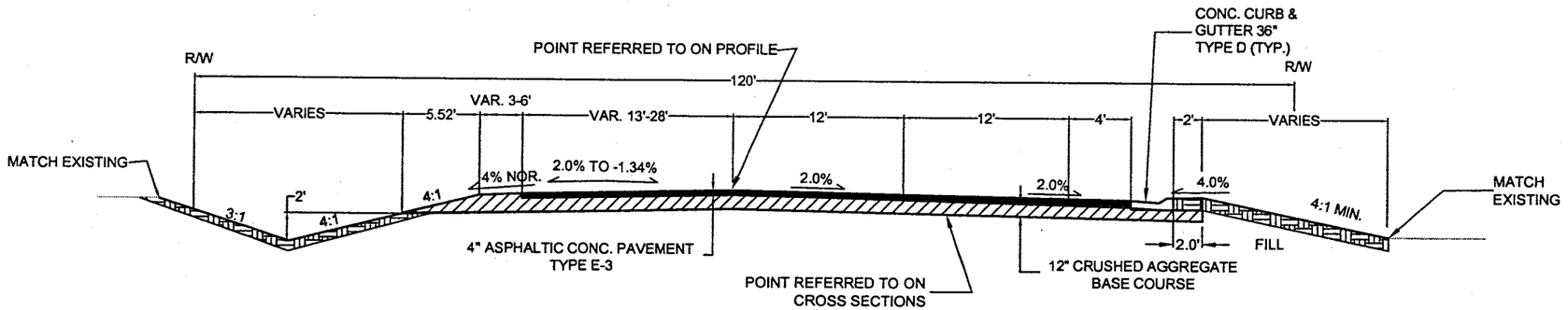

TYPICAL SECTION
CTH KK, BITTERSWEET ROAD STA. 21+50 - STA. 24+03.47

STATE PROJECT NUMBER: 6651-01-00	HWY: CTH N	COUNTY: MARATHON	TYPICAL SECTIONS	SHEET NO: 2.9	E

P:\DRAFT\28940101 CTH N KK TO LILY\EXIST Typ Sections.dwg, CTH KK (2), 2/20/2004 11:54:32 AM

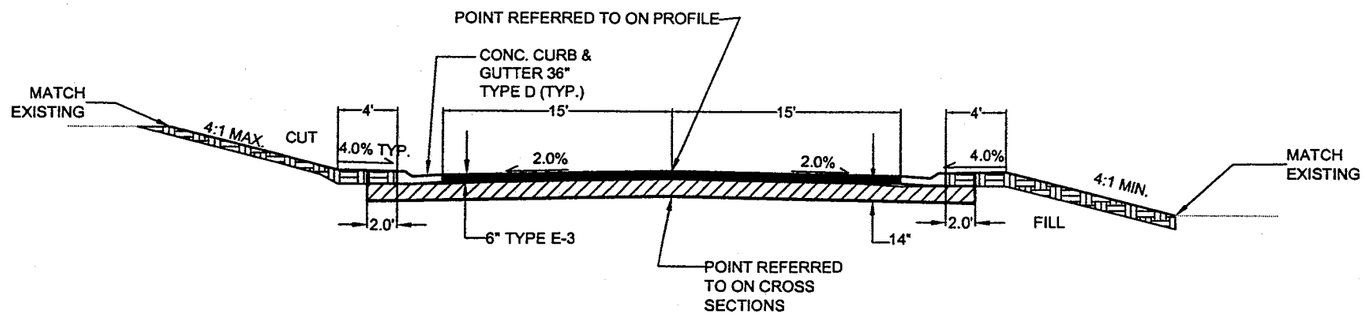

TYPICAL SECTION
BITTERSWEET ROAD STA. 25+38 - 25+98.29

STATE PROJECT NUMBER: 6651-01-00	HWY: CTH N	COUNTY: MARATHON	TYPICAL SECTIONS	SHEET NO: 2.10	E

P:\DRAFT\28940101 CTH N KK TO LILY\EXIST Typ Sections.dwg, CTH KK (3), 2/18/2004 1:51:03 PM

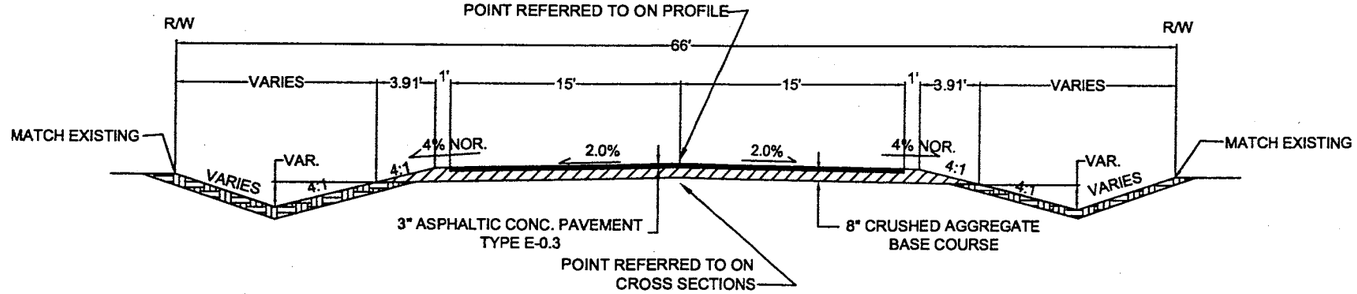

TYPICAL SECTION RIB MOUNTAIN DRIVE

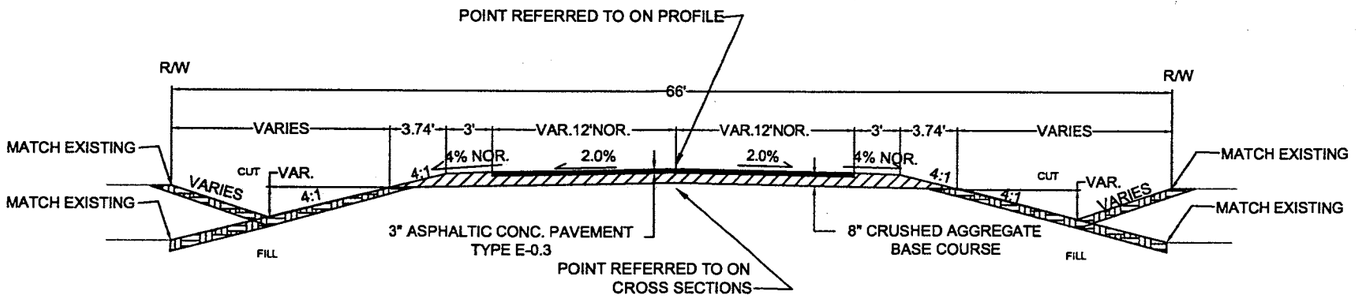

TYPICAL SECTION
CLOVER ROAD, STA. 0+95.03 - STA. 5+54.87
SOUTH MOUNTAIN ROAD

NOTE: TRANSITION PAVEMENT AND BASE COURSE THICKNESS DIFFERENCES WITHIN 10 FEET OF JOINT.

LEGEND

- ASPHALTIC CONCRETE PAVEMENT
- CRUSHED AGGREGATE BASE COURSE
- 4 INCH TOPSOIL, FERTILIZER, SEED AND MULCH

NOTE: EROSION CONTROL FABRIC REQUIRED ON 3:1 SLOPES OR GREATER, INPLACE OF MULCH.

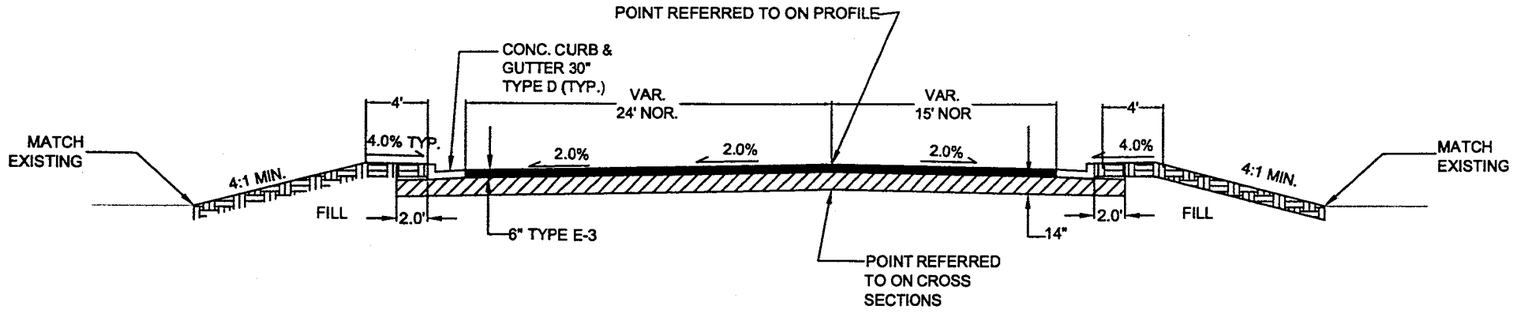

TYPICAL SECTION
CLOVER ROAD STA. 0+38 - 0+95.03

STATE PROJECT NUMBER: 6651-01-00	HWY: CTH N	COUNTY: MARATHON	TYPICAL SECTIONS	SHEET NO: 2.11	E

P:\DRAFT\28940101 CTH N KK TO LILYEXIST Typ Sections.dwg, CLOVER, 10/06/2003 08:00:58 AM

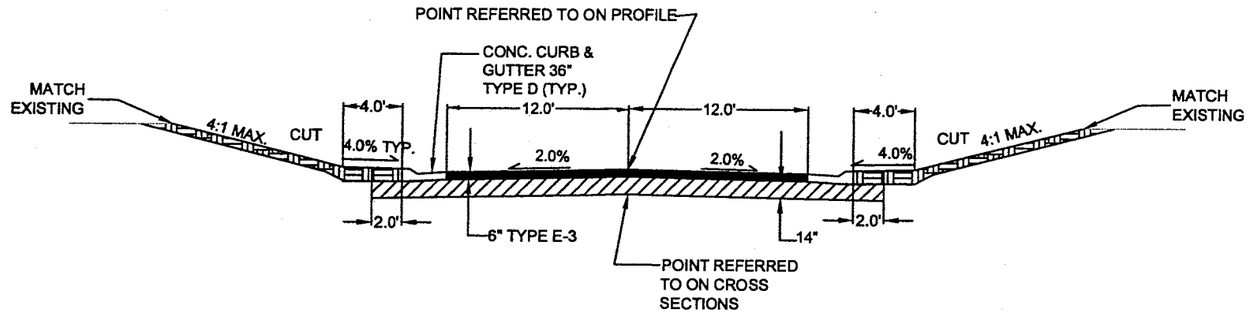

TYPICAL SECTION
MAGNOLIA AVENUE STA. 1+17 - 1+62

NOTE: TRANSITION BASE COURSE THICKNESS DIFFERENCES WITHIN 10 FEET OF JOINT.

LEGEND

- ASPHALTIC CONCRETE PAVEMENT
- CRUSHED AGGREGATE BASE COURSE
- 4 INCH TOPSOIL, FERTILIZER, SEED AND MULCH

NOTE: EROSION CONTROL FABRIC REQUIRED ON 3:1 SLOPES OR GREATER, INPLACE OF MULCH.

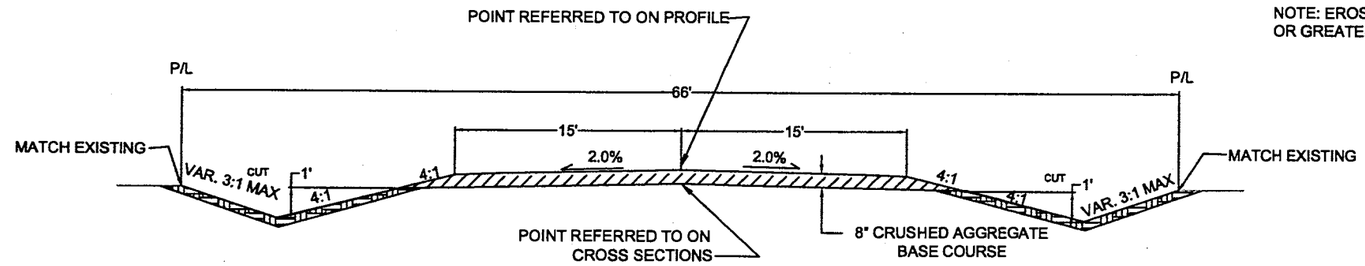

TYPICAL SECTION
MAGNOLIA AVENUE STA. 0+50 - STA. 1+17

P:\DRAFT\28940101 CTH N KK TO LILY\EXIST Typ Sections.dwg, MAGNOLIA, 10/06/2003 08:02:49 AM

STATE PROJECT NUMBER: 6651-01-00	HWY: CTH N	COUNTY: MARATHON	TYPICAL SECTIONS	SHEET NO: 2.12	E

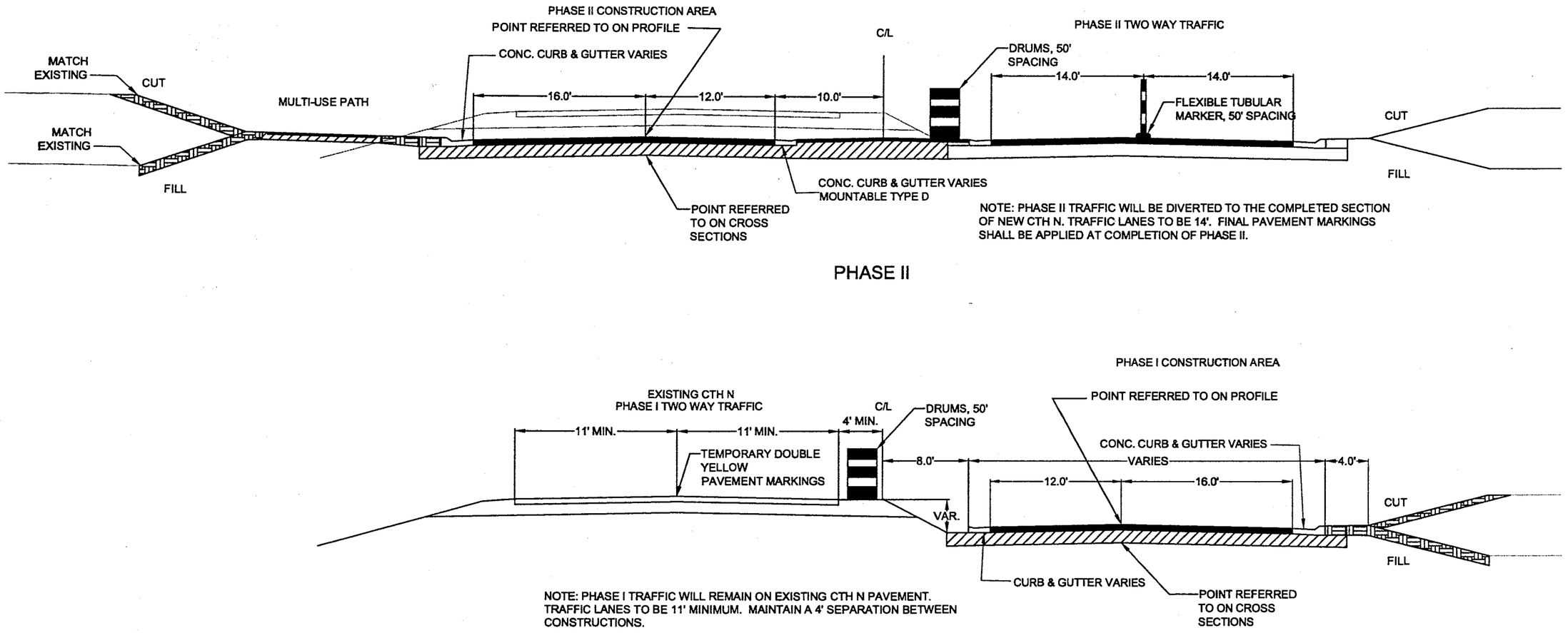

PHASE II

PHASE I

STATE PROJECT NUMBER: 6651-01-00	HWY: CTH N	COUNTY: MARATHON	TYPICAL SECTIONS, TRAFFIC CONTROL PHASING	SHEET NO: 2.13	E

P:\DRAFT\2894\0101 CTH N KK TO LILY\PROP Typ Sections1.dwg, TRAFFIC PHASING, 10/06/2003 08:03:34 AM

BEGIN PROJECT
STATION 0+00.00
Y=180960.6929
X=269963.5834
SAW CUT REQ'D.

CTH N

1+00 CROWN LINE N 87°35'20" W 618.00' 2+00

12'
8"
4"
12'

Y = 180952.12
X = 270215.45

3+00 MOUNTABLE MEDIAN

Y = 180948.06
X = 270215.27

NOT TO SCALE

Y = 180971.72
X = 270761.90

180'

Y = 180956.69
X = 270581.51

Y = 180952.72
X = 270761.46

16'

Y = 180939.12
X = 270743.11

Y = 180939.22
X = 270761.18

Y = 180944.69
X = 270581.26

12'

CROWN LINE

CTH N

LEFT

12'

E 5+00

10'

6+00

Y = 180934.69
X = 270581.04

7+00

5'

17'

8'

RAISED MEDIAN

10'

PI Sta = 6+18.00

8+00

N 88°44'13" W 382.00'

Y = 180926.70
X = 270580.83

12'

CROWN LINE

Y = 180934.16
X = 270743.07

24'

Y = 180934.22
X = 270761.07

RIGHT

Y = 180912.68
X = 270580.67

Y = 180908.73
X = 270760.44

16'

179'

Y = 180889.74
X = 270760.00

NOT TO SCALE

STATE PROJECT NUMBER: 6651-01-00	HWY: CTH N	COUNTY: MARATHON	COORDINATE LAYOUT	SHEET NO: 2.14	E

P:\draft\28940100 cth n west arterial\topo survey\CTH N topo.dwg, STAKEOUT, 2/19/2004 10:34:24 AM

END CONSTRUCTION
Sta. 26+50.00 KK
SAW CUT REQ'D.
Y = 181076.27
X = 270962.71

HOUSE

HOUSE

14'
14'
S 00°11'35" E
228.00'
34'

Y = 181024.50
X = 270944.88

Y = 181005.50
X = 270907.94

R40'

Y = 180968.51
X = 270907.13

26+00 KK

BITTERSWEET ROAD

Y = 181027.62
X = 270980.87

R60'

Y = 181024.81
X = 271037.88

Y = 180967.82
X = 271038.29

180'

Y = 180971.72
X = 270761.90

Y = 180952.72
X = 270761.46

16'

Y = 180939.12
X = 270743.11

Y = 180939.22
X = 270761.18

LINE

CTH N

LEFT C/L

Y = 180948.27
X = 270963.14

PI STA 125+22.00

16'

LEFT C/L

12'

Y = 180936.67
X = 270876.79

17'

7+00

5'

17'

8'

RAISED MEDIAN

4'

9+00

8+00

N 88°44'13" W 382.00'

N 88°44'13" W
382.00'

POT Sta 10+00.08
= Sta 25+00 KK

Y = 180923.31
X = 271037.37

24'

CTH N

Y = 1809
X = 2711

N 89°35'17" E
1403.18'

17'

11+00

CROWN LINE

Y = 180934.16
X = 270743.07

24'

Y = 180934.22
X = 270761.07

Y = 180931.68
X = 270876.68

4'

RAISED MEDIAN

Y = 180926.27
X = 270963.02

RIGHT C/L

Y = 180918.31
X = 271037.40

12'

RIGHT C/L

Y = 1809
X = 2711

Y = 180908.73
X = 270760.44

16'

Y = 180904.27
X = 270963.11

16'

179'

Y = 180889.74
X = 270760.00

Y = 180887.18
X = 270875.78

Y = 180885.76
X = 271030.55

Y = 180848.76
X = 271030.63

R40'

Y = 180848.95
X = 270993.63

Y = 180830.20
X = 270874.53

R60'

Y = 180829.90
X = 270931.53

CTH KK

24+00 KK

28'

28'

N

NOT TO SCALE

STATE PROJECT NUMBER: 6651-01-00	HWY: CTH N	COUNTY: MARATHON	COORDINATE LAYOUT	SHEET NO: 2.15	E

P:\draft\28940100 cth n west arterial\topo survey\CTH N topo.dwg, STAKEOUT (2), 2/19/2004 10:34:39 AM

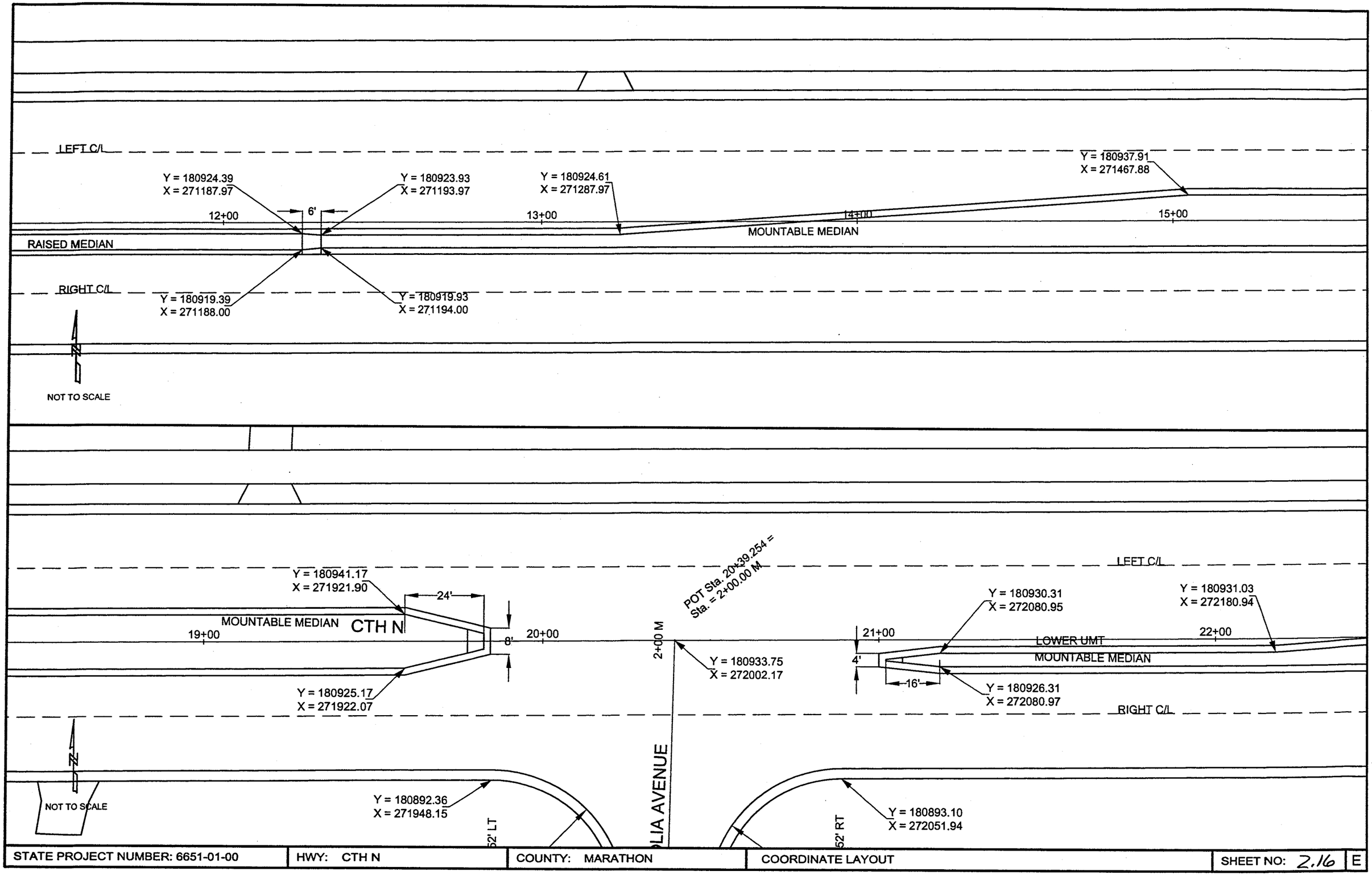

P:\draft\28940100 cth n west arterial\topo survey\CTH N topo.dwg, STAKEOUT (3), 2/19/2004 10:35:14 AM

STATE PROJECT NUMBER: 6651-01-00	HWY: CTH N	COUNTY: MARATHON	COORDINATE LAYOUT	SHEET NO: 2.16	E

P:\draft\28940100 cth n west arterial\topo survey\CTH N topo.dwg, STAKEOUT (4), 2/19/2004 10:35:31 AM

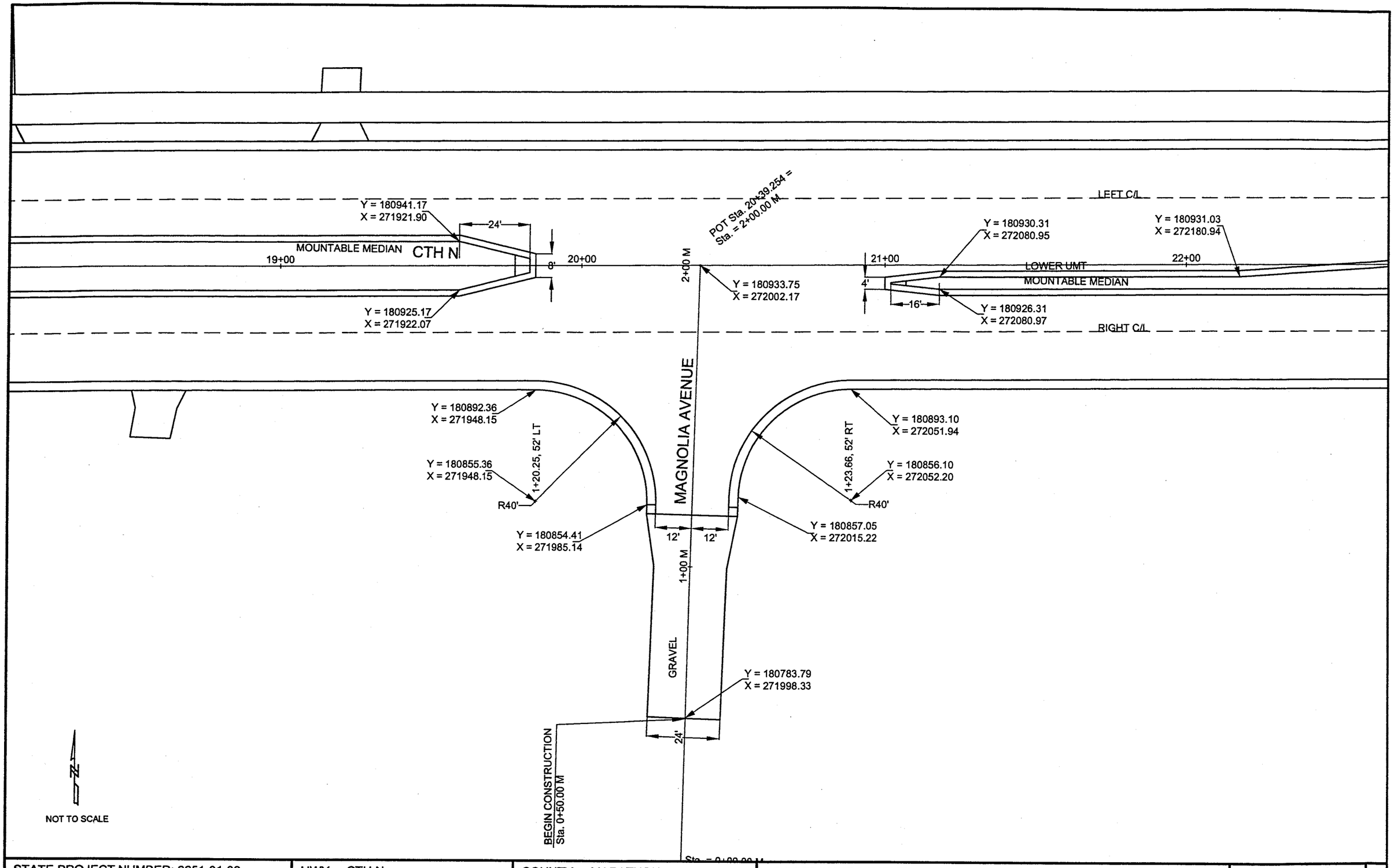

STATE PROJECT NUMBER: 6651-01-00	HWY: CTH N	COUNTY: MARATHON	COORDINATE LAYOUT	SHEET NO: 2.17	E

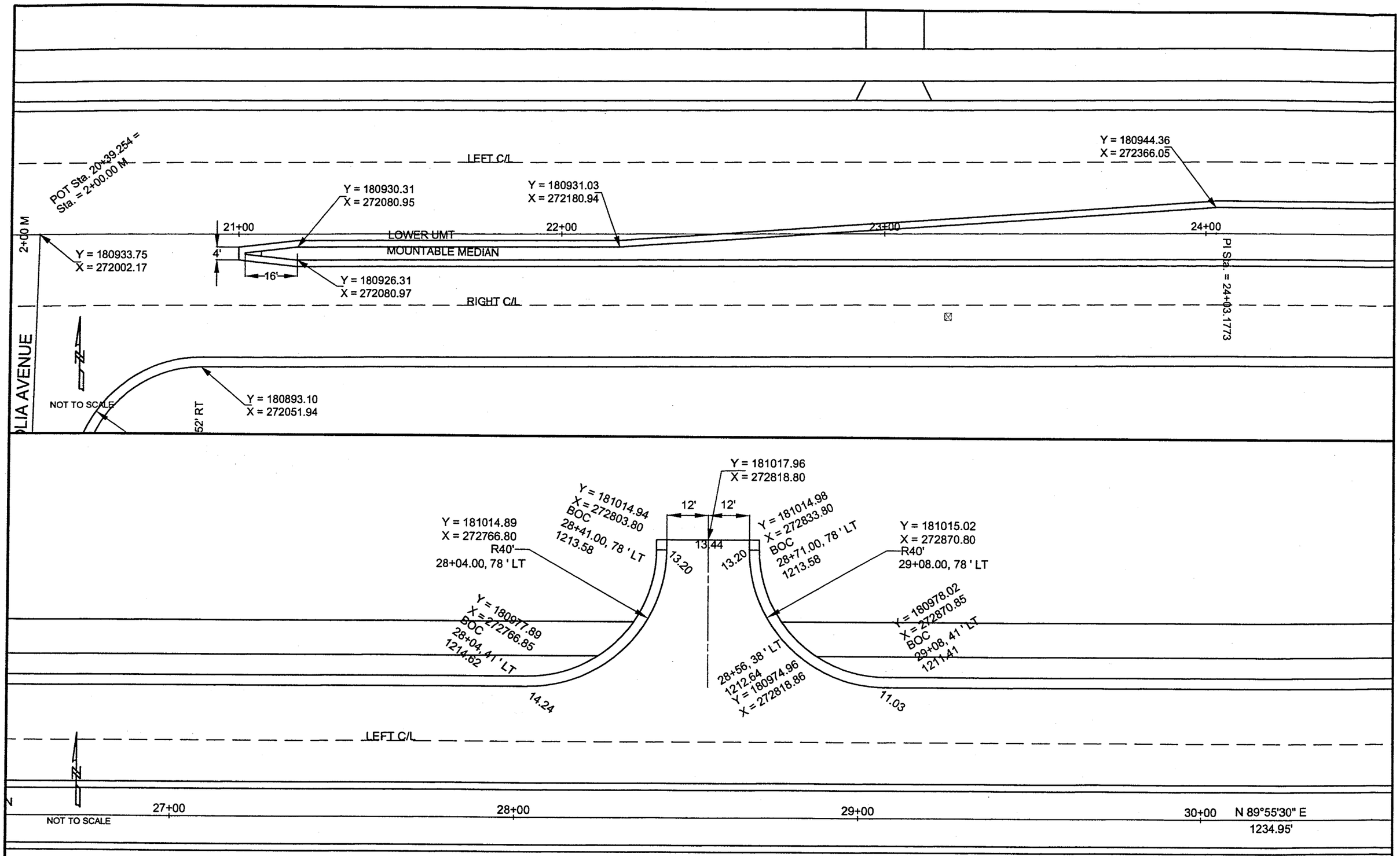

P:\draft\28940100 cth n west arterial\topo survey\CTH N topo.dwg, STAKEOUT (5), 2/19/2004 10:35:53 AM

STATE PROJECT NUMBER: 6651-01-00	HWY: CTH N	COUNTY: MARATHON	COORDINATE LAYOUT	SHEET NO: 2.18	E

NOT TO SCALE

BEGIN RETAINING WALL
STA. 32+50, 60' LT
Y = 180997.47
X = 273212.83

LEFT C/L

LEFT

MOUNTABLE MEDIAN

31+00

32+00

33+00

34+00

RIGHT C/L

RIGH

NOT TO SCALE

QUA

RETAINING WALL

Y = 180997.98
X = 273601.46

Y = 180994.98
X = 273601.47

Y = 180984.98
X = 273601.41

Y = 180978.98
X = 273601.37

Y = 180977.28
X = 273730.44

Y = 180976.70
X = 273736.43

LEFT C/L

LEFT C/L

Y = 180945.98
X = 273601.09

Y = 180937.98
X = 273601.04

Y = 180944.28
X = 273730.00

6'

Y = 180944.70
X = 273736.01

35+00

MOUNTABLE MEDIAN

36+00

CTH N

37+00

38+00

349.83'
N 89°14'37" W

39+00

RAISED MEDIAN

PI Sta. = 36+38.1302

Y = 180929.98
X = 273600.99

Y = 180928.28
X = 273729.79

Y = 180927.70
X = 273735.79

RIGHT C/L

RIGHT C/L

Y = 180896.98
X = 273600.71

Y = 180895.28
X = 273729.36

Y = 180895.70
X = 273735.36

P:\draft\28940100 cth n west arterial\topo survey\CTH N topo.dwg, STAKEOUT (6), 2/19/2004 10:36:34 AM

STATE PROJECT NUMBER: 6651-01-00	HWY: CTH N	COUNTY: MARATHON	COORDINATE LAYOUT	SHEET NO: 2.19	E

P:\draft\28940100 cth n west arterial\topo survey\CTH N topo.dwg, STAKEOUT (7), 2/19/2004 10:42:12 AM

Y = 180993.36
X = 273951.63

Y = 180990.36
X = 273951.59

Y = 180980.36
X = 273951.46

Y = 180973.86
X = 273951.38

Y = 180955.36
X = 273951.13

Y = 180941.86
X = 273950.95

CROWN LINE

Y = 180933.36
X = 273950.84

349.83'
N 89°14'37" W

39+00

40+00

41+00

42+00

CTH N

RAISED MEDIAN

RAISED MEDIAN

PC Sta. = 39+87.9628

Y = 180924.86
X = 273950.73

Y = 180911.36
X = 273950.55

CROWN LINE

Y = 180892.87
X = 273950.31

NOT TO SCALE

END RETAINING WALL
STA. 45+30, 60' LT.
Y = 181102.39
X = 274423.96

44+00

45+00

46+00

47+00

48+00

49+00

50+00

51+00

LEFT C/L

RIGHT C/L

RAISED MEDIAN

CTH N

PC Sta. = 47+11.519 =
BOC Sta. 0+00.000

Y = 181172.31
X = 274540.91

Y = 181185.46
X = 274562.32

Y = 181214.53
X = 274593.74

Y = 181271.52
X = 274645.11

Y = 181160.17
X = 274552.61

Y = 181181.51
X = 274566.30

Y = 181268.54
X = 274649.13

25'

17'

1:00N

2:00N

NOT TO SCALE

Y = 181136.94
X = 274574.62

Y = 181095.20
X = 274614.17

R60'

0+95

Y = 181137.94
X = 274652.65

CLOVER ROAD

15'

1+00

24'

10'

Y = 181234.49
X = 274863.35

Y = 181211.37
X = 274692.89

Y = 181183.51
X = 274667.79

R40'

0+75.78 64' LT

Y = 181168.67
X = 274684.36

STATE PROJECT NUMBER: 6651-01-00	HWY: CTH N	COUNTY: MARATHON	COORDINATE LAYOUT	SHEET NO: 2,20	E

P:\draft\28940100 cth n west arterial\topo survey\CTH N topo.dwg, STAKEOUT (8), 2/19/2004 10:38:21 AM

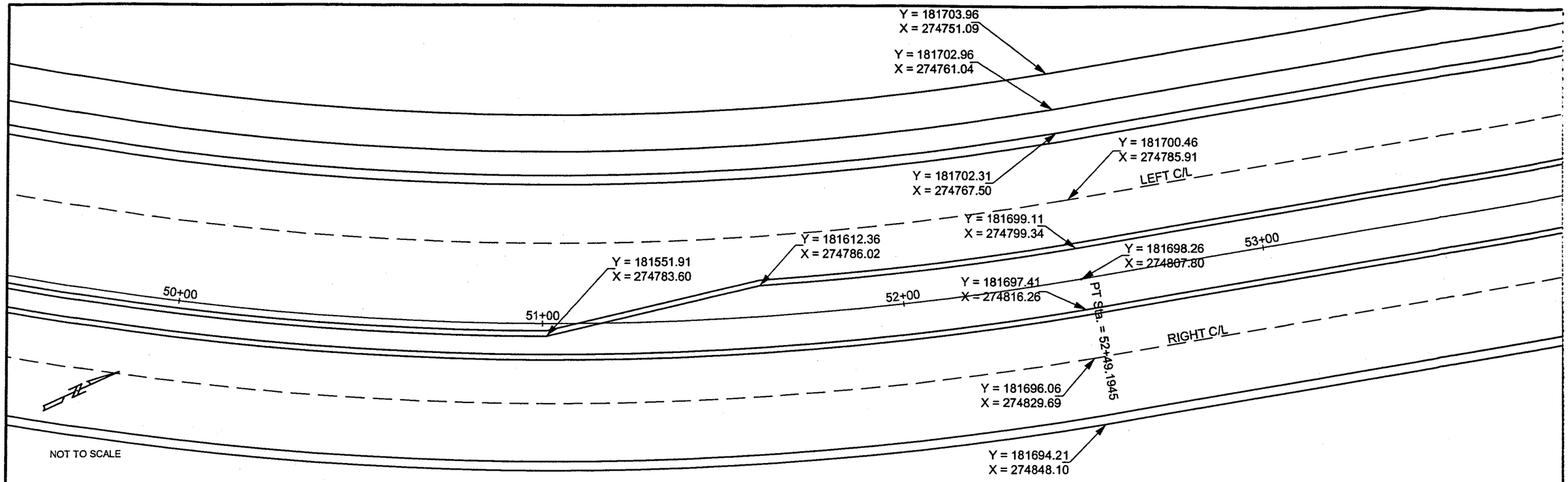

STATE PROJECT NUMBER: 6651-01-00	HWY: CTH N	COUNTY: MARATHON	COORDINATE LAYOUT	SHEET NO: 2.21	E

END PROJECT
Sta. 60+00.00
Y = 182445.30
X = 274882.90

Y = 182447.50
X = 274861.01

Y = 182449.40
X = 274842.61

Y = 182450.21
X = 274836.16

Y = 182451.13
X = 274826.20

LEFT C/L

CROWN LINE

58+00

59+00

CTH N

60+00

61+00

CROWN LINE

RIGHT C/L

SEE STATE PROJECT 6651-01-71

Y = 182441.29
X = 274923.20

Y = 182443.10
X = 274904.79

Y = 182444.49
X = 274891.36

LILY LANE

NOT TO SCALE

P:\draft\28940100 cth n west arterial\topo survey\CTH N topo.dwg, STAKEOUT (9), 2/19/2004 7:44:52 AM

STATE PROJECT NUMBER: 6651-01-00	HWY: CTH N	COUNTY: MARATHON	COORDINATE LAYOUT	SHEET NO: 2.22	E

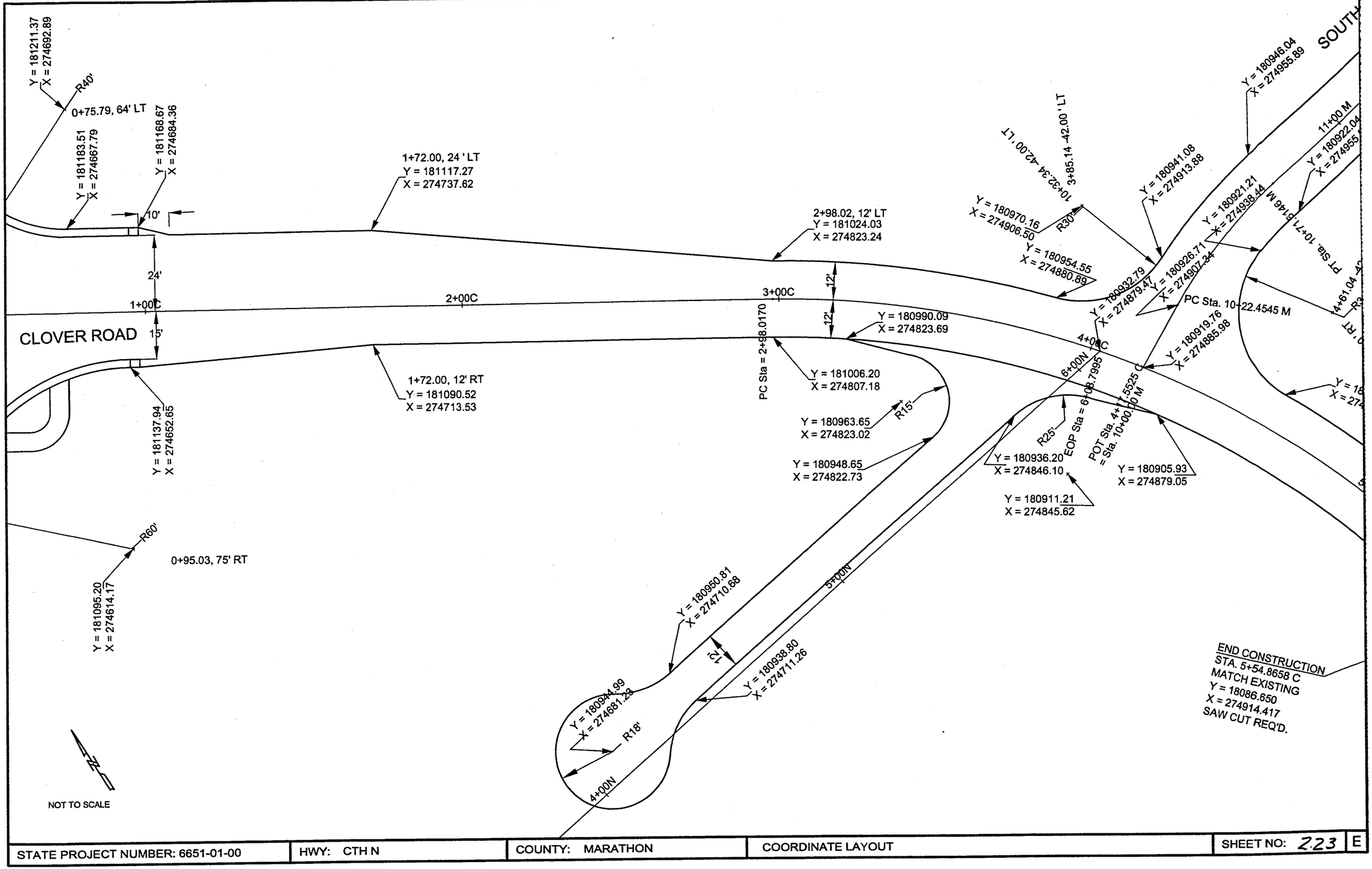

P:\draft\28940100 cth n west arterial\topo survey\CTH N topo.dwg, STAKEOUT (10), 2/19/2004 7:55:10 AM

STATE PROJECT NUMBER: 6651-01-00	HWY: CTH N	COUNTY: MARATHON	COORDINATE LAYOUT	SHEET NO: 223	E

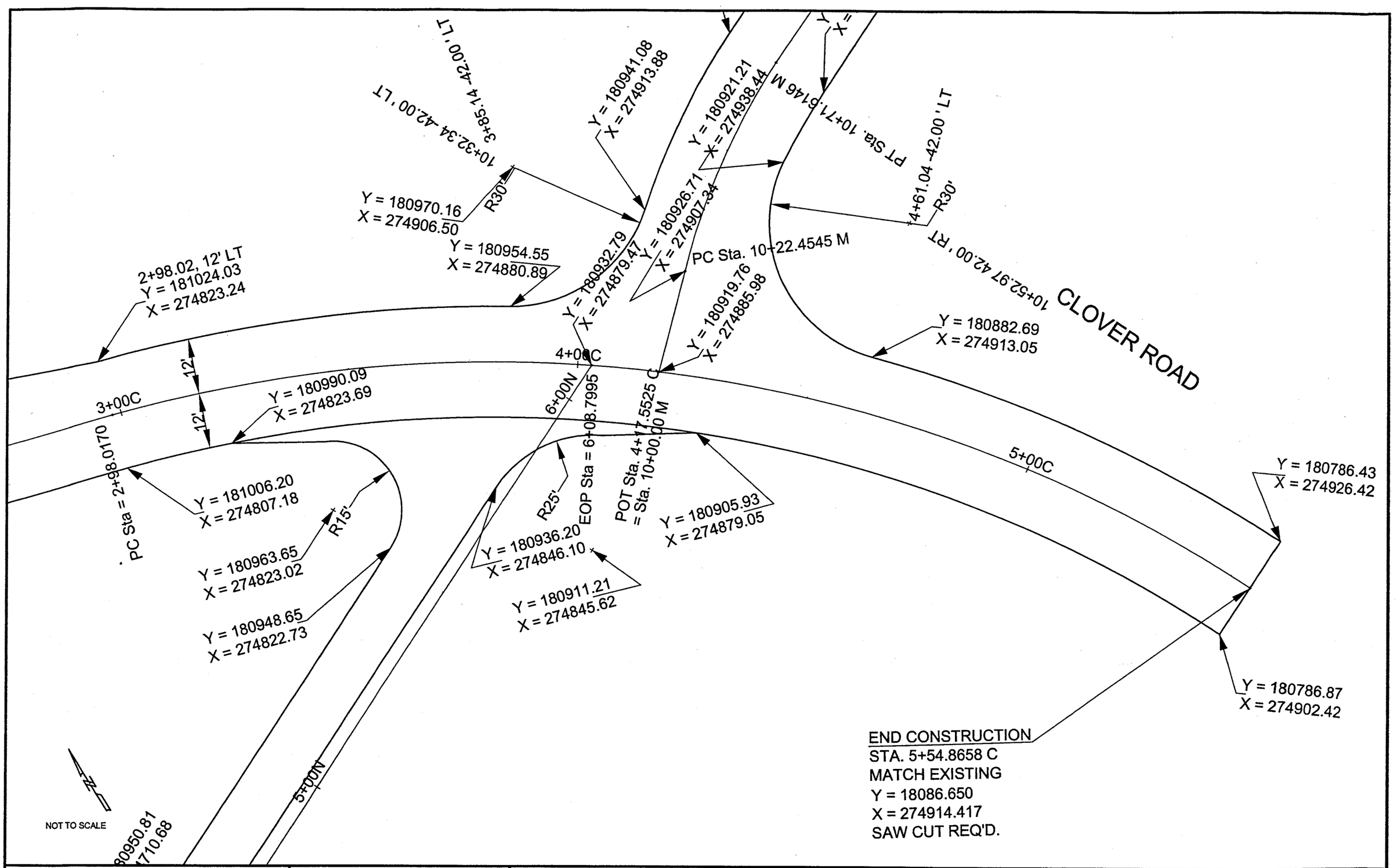

STATE PROJECT NUMBER: 6651-01-00	HWY: CTH N	COUNTY: MARATHON	COORDINATE LAYOUT	SHEET NO: 2.24	E

P:\draft\28940100 cth n west arterial\topo survey\CTH N topo.dwg, STAKEOUT (11), 2/19/2004 7:57:44 AM

SOUTH MOUNTAIN ROAD

Y = 180941.08
X = 274913.88

Y = 180946.04
X = 274955.89

Y = 180921.21
X = 274938.44

Y = 180922.04
X = 274955.56

11+00 M

12+00 M

13+00 M

14+00 M

PT Sta. 10+71.6146 M

42.00 ' RT

2.4545 M

+4+61.04 -42.00 ' LT

R30'

NOT TO SCALE

Y = 180962.81
X = 275195.23

R20'

20+31.68 -35.00 ' LT

Y = 180942.81
X = 275194.96

13+10.71 -32.00 ' LT

Y = 180962.36
X = 275215.23

RIB MOUNTAIN DRIVE

Y = 180962.32
X = 275245.23

13+80.72 -32.00 ' LT

R20'

Y = 180961.87
X = 275265.23

20+32.33 35.00 ' RT

Y = 180941.87
X = 275264.96

Y = 180940.93
X = 275334.24

Y = 180930.35
X = 275229.50

POT Sta. 13+45.4171 M
= Sta. 20+00.00 R

Y = 180916.94
X = 275333.91

END CONSTRUCTION
Sta. 14+50 M
Y= 180928.935
X = 275334.076
SAW CUT REQ'D.

21+00 R

22+00 R

23+00 R

Y = 181208.32
X = 275220.83

Y = 181207.64
X = 275250.82

END CONSTRUCTION
Sta. 22+77.709 R
Y = 181207.9826
X = 275235.8267
SAW CUT REQ'D.

NOT TO SCALE

P:\draft\28940100 cth n west arterial\topo survey\CTH N topo.dwg, STAKEOUT (12), 2/19/2004 8:09:49 AM

STATE PROJECT NUMBER: 6651-01-00	HWY: CTH N	COUNTY: MARATHON	COORDINATE LAYOUT	SHEET NO: 2.25	E

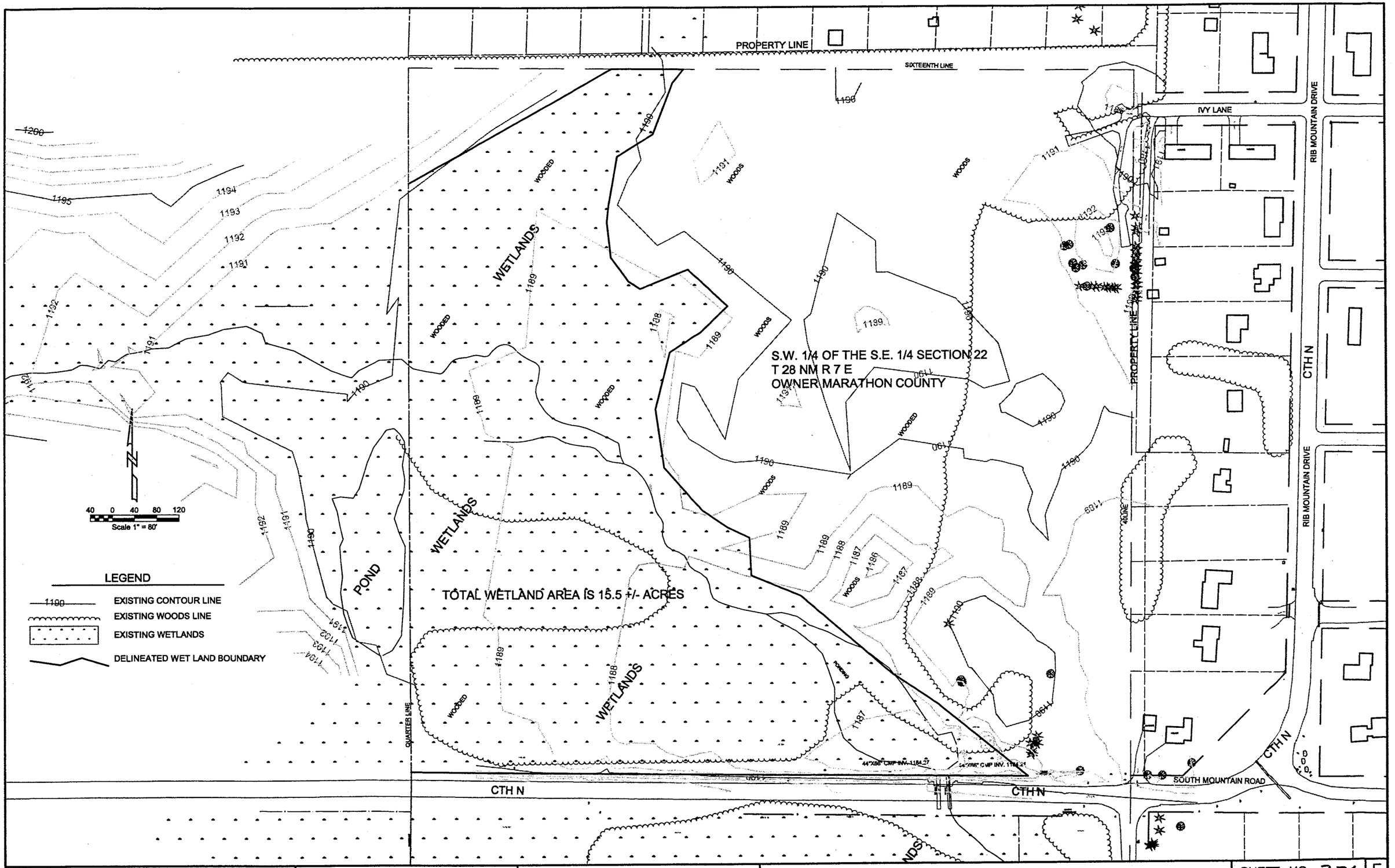

STATE PROJECT NUMBER: 6651-01-00	HWY: CTH N	COUNTY: MARATHON	CTH N WETLAND MITIGATION, EXISTING CONDITIONS	SHEET NO: 2.26 E

P:\DRAFT\28940100 CTH N Borrow Site\Borrow Site2.dwg, EXIST, 01/16/2003 12:30:57 PM

Earth Materials Balance Summary[1] for KK to Lily Lane Road Construction and Wetland Mitigation Projects

	Road Construction (Phase I and II)	Wetland Mitigation[2]	Surplus Material	Imported Material
Topsoil Salvaged[3] (cu. yd)	6,190	4,601	4,301	
Topsoil Required[4] (cu. yd)	-6,490	0		
Common Excavation (cu. yd)	35,028	46,950		
Required Fill (cu. yd)	-57,239	0		
Borrow Material (cu. yd)	-22,211	46,950	24,739	
Rock Excavation (cu. yd)	2,232	0		
Marsh Excavation (cu. yd)	12,403	0	12,403	
Hydric Soils[5] (cu. yd)	0	-9,034		9,034
Wetland liner material[6] (cu. yd)	0	-9,034		9,034
WDOT Seed Mixture No. 60 (lbs.)	0	400		
Mulching (sq. yd.)	0	28,000		

[1]Quantities generated during construction are indicated with positive numbers; quantities required during construction are indicated with negative numbers.

[2]Wetland mitigation quantities include 84 cu. yd of topsoil and 650 cu. yd of borrow material from the infiltration basin. These quantities can be increased by expanding the size of the basin.

[3] Topsoil salvaged volume calculated assuming a 6-inch salvage thickness.

[4] Topsoil required volume calculated assuming a 4-inch application thickness.

[5] The hydric soils used for wetland mitigation must be free of invasive or otherwise noxious species. The material from Marsh Excavation may not be suitable for use in the created wetlands because of the presence of reed canary grass.

[6] Material must meet the requirements for SC, ML-CL, CL, or CH under the Unified Soil Classification System.

Construction Considerations for Wetland Mitigation Areas

Upland Preservation Areas

These areas shall be preserved as undeveloped natural areas. As such, impact to these areas during construction must be avoided.

Razed-Roadway Wetlands

The stretch of CTH N that will be obliterated and razed must be excavated to at least one foot lower than the grade of the existing adjacent wetlands. The excavation must be two feet lower than the existing wetlands in a fifteen-foot wide trough centered beneath the existing road centerline. Insulation must be installed to protect the existing water and sewer lines. Hydric soils must be spread over the former roadway to a thickness of one foot if native hydric soils are not present. The area must be seeded and mulched in accordance with the *Mitigation Plan*.

Created Wetlands

The wetlands will be created by: (1) excavating to an elevation two feet below the final grades indicated on the *Grading Plan*, (2) lining the excavation with an approved clay-rich material compacted to a thickness of one foot, (3) installing a layer of hydric soils to a thickness of one foot over the entire excavated area, (4) seeding and mulching in accordance with the *Mitigation Plan*, and (5) installing two water-level measuring devices at the four monitoring stations in accordance with the *Mitigation Plan*.

Note: the goal of the final grading plan is to create a basin with an irregular base that includes two shallow "ponds" and one low "hump", neither of which should differ by more than three feet from the adjacent base grade elevation.

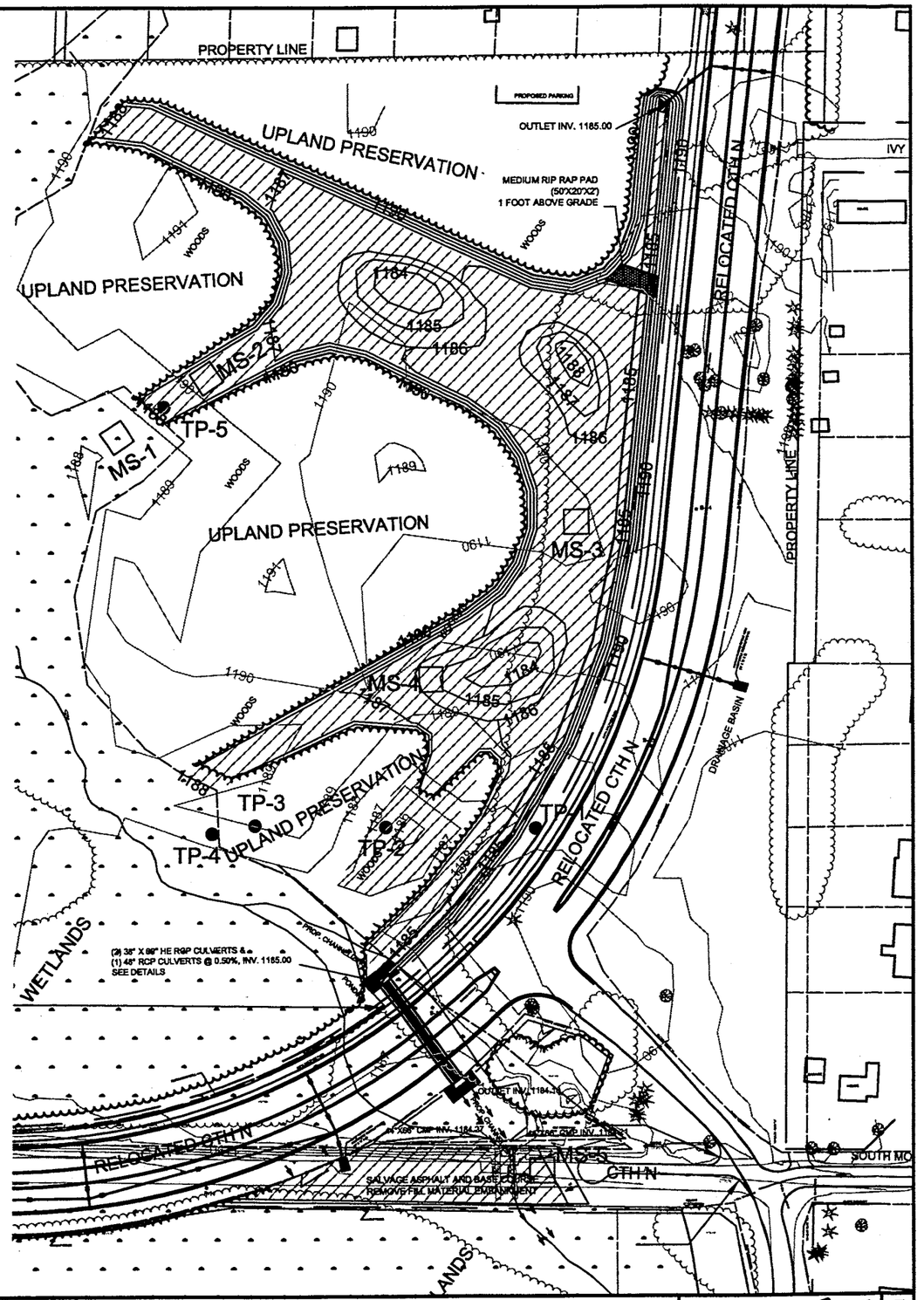

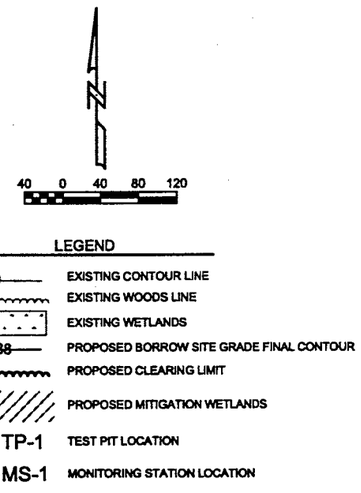

STATE PROJECT NUMBER: 6651-01-00	HWY: CTH N	COUNTY: MARATHON	CTH N WETLAND MITIGATION AND BORROW SITE GRADING PLAN	SHEET NO: 2.27 E

P:\DRAFT\2004\0100 CTH N Borrow Site\Borrow Site2.dwg, GRADING CONST, 02/25/2004 01:21:16 PM

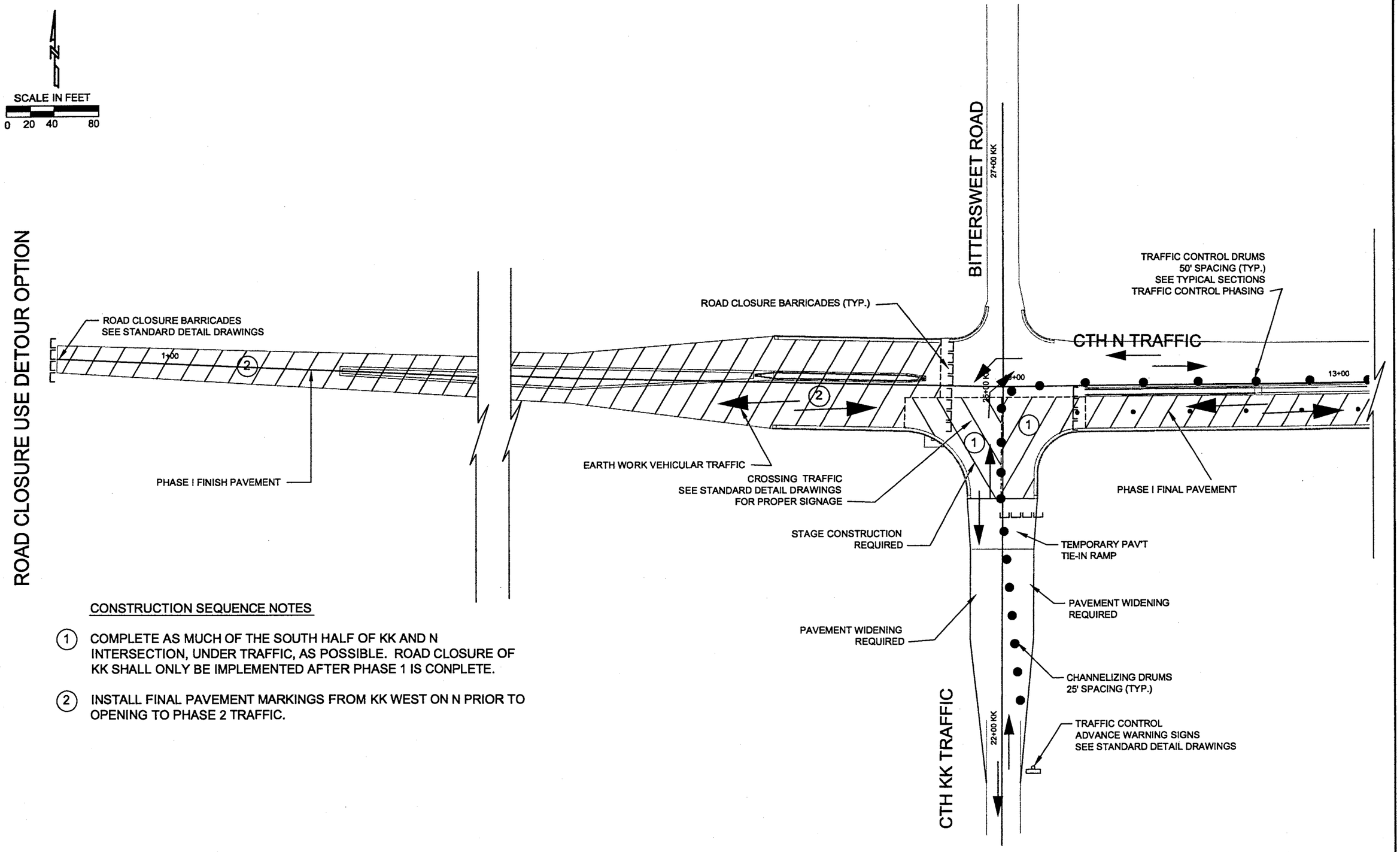

CONSTRUCTION SEQUENCE NOTES

1. COMPLETE AS MUCH OF THE SOUTH HALF OF KK AND N INTERSECTION, UNDER TRAFFIC, AS POSSIBLE. ROAD CLOSURE OF KK SHALL ONLY BE IMPLEMENTED AFTER PHASE 1 IS CONPLETE.

2. INSTALL FINAL PAVEMENT MARKINGS FROM KK WEST ON N PRIOR TO OPENING TO PHASE 2 TRAFFIC.

STATE PROJECT NUMBER: 6651-01-00	HWY: CTH N	COUNTY: MARATHON	PHASE 1 CONSTRUCTION PLAN	SHEET NO: 228	E

P:\DRAFT\28940100 CTH N West Arterial\topo survey\CTH N topo.DWG, PHASE1-2, 10/07/2003 02:56:07 PM

CONSTRUCTION SEQUENCE NOTES

1. MAINTAIN 22 FOOT WIDTH ON THE EXISTING CTH N PAVEMENT AND 4 FOOT SEPARATION BETWEEN EDGE OF PAVEMENT AND CONSTRUCTION LIMIT OF PHASE 1. SEE TYPICAL SECTIONS, TRAFFIC CONTROL PHASING.
2. EMPHASIZE EFFORTS TO OPEN TWO WAY TRAFFIC ON THE EAST TWO LANES OF THE RELOCATED HIGHWAY SECTION. COORDINATE OPENING WITH ADJOINING PROJECTS.
3. AFTER TRAFFIC CONTROL IS IN PLACE, DIVERT CTH N TRAFFIC TO THE EAST LANES. CLOSE THE EXISTING SECTION OF ROADWAY BETWEEN NEW ROADWAY AND CLOVER ROAD. (SEE PHASE 1A CONSTRUCTION PLAN)
4. PAVE THE WEST LANES WITH 4 INCHES OF ASPHALT PAVEMENT FOR TEMPORARY TRAFFIC USE.
5. ONCE EARTHWORK TRAFFIC IS AT A MINIMUM SWITCH TRAFFIC TO THE WEST LANES (TWO WAY) TO ALLOW FOR THE CONSTRUCTION OF THE EAST LANES ACROSS EXISTING CTH N. (SEE PHASE 1B CONSTRUCTION PLAN)
6. AFTER ALL PAVEMENT, RESTORATION, FLEXIBLE LANE MARKERS, AND SIGNING IS INSTALLED SWITCH TRAFFIC TO THE SOUTH AND EAST (TWO WAY) LANES AND PREPARE FOR PHASE 2 CONSTRUCTION.

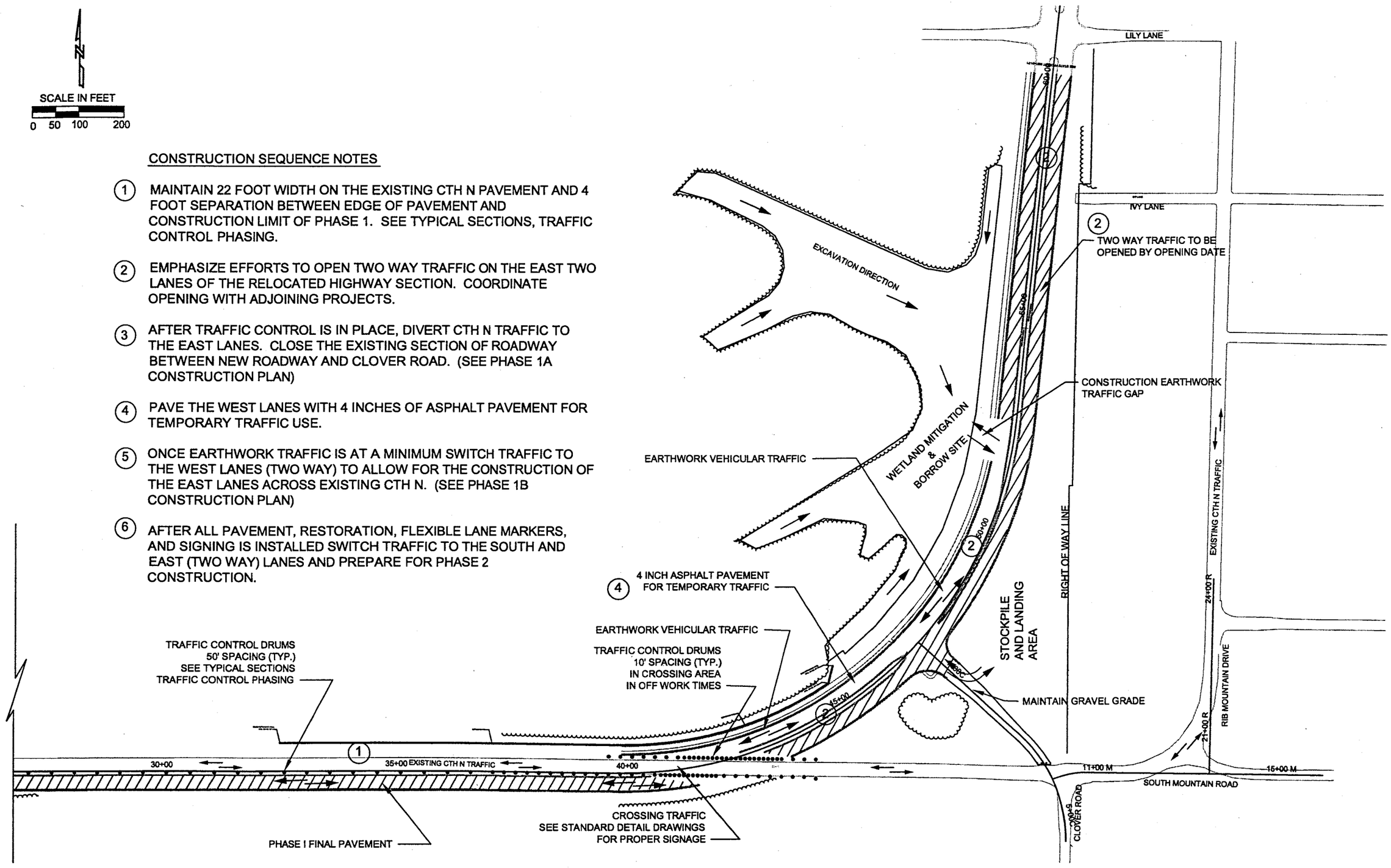

STATE PROJECT NUMBER: 6651-01-00	HWY: CTH N	COUNTY: MARATHON	PHASE 1 CONSTRUCTION PLAN	SHEET NO: 2.29	E

P:\DRAFT\28940100 CTH N West Arterial\topo survey\CTH N topo.DWG, PHASE1, 10/07/2003 09:14:26 AM

PHASE 1B CONSTRUCTION PLAN

SCALE IN FEET
0 25 50 100

CONSTRUCTION SEQUENCE NOTES

(5) ONCE EARTHWORK TRAFFIC IS AT A MINIMUM SWITCH TRAFFIC TO THE WEST LANES (TWO WAY) TO ALLOW FOR THE CONSTRUCTION OF THE EAST LANES ACROSS EXISTING CTH N.

(6) AFTER ALL PAVEMENT, RESTORATION, FLEXIBLE LANE MARKERS, AND SIGNING IS INSTALLED SWITCH TRAFFIC TO THE SOUTH AND EAST (TWO WAY) LANES AND PREPARE FOR PHASE 2 CONSTRUCTION.

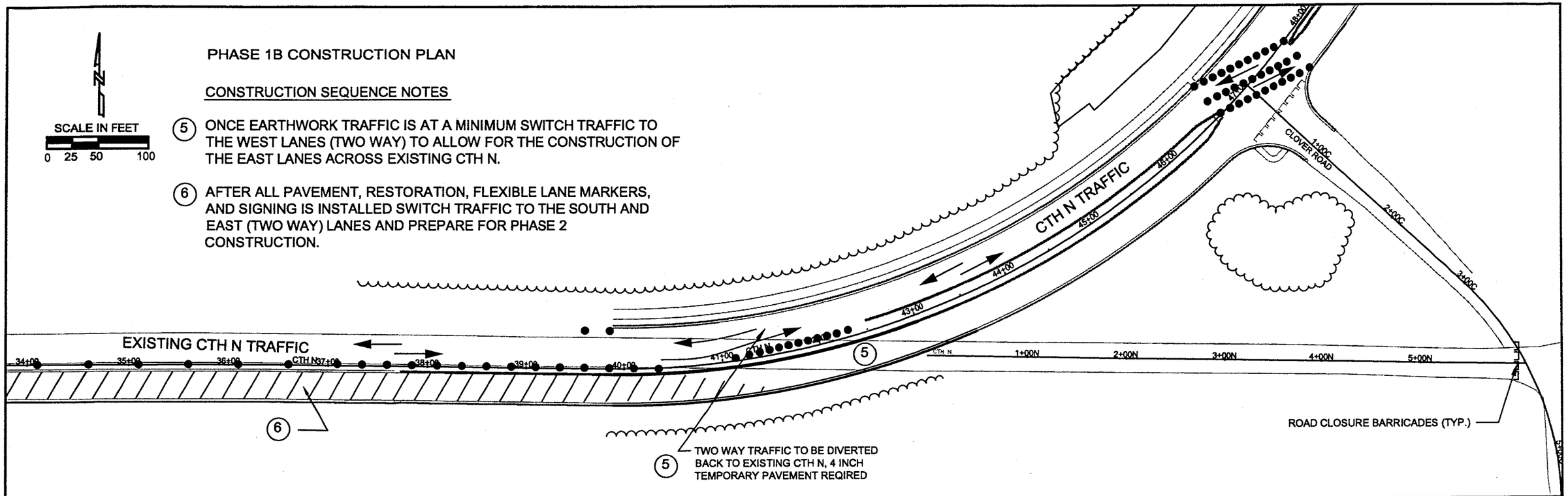

PHASE 1A CONSTRUCTION PLAN

SCALE IN FEET
0 25 50 100

CONSTRUCTION SEQUENCE NOTES

(3) AFTER TRAFFIC CONTROL IS IN PLACE, DIVERT CTH N TRAFFIC TO THE EAST LANES. CLOSE THE EXISTING SECTION OF ROADWAY BETWEEN NEW ROADWAY AND CLOVER ROAD.

(4) PAVE THE WEST LANES WITH 4 INCHES OF ASPHALT PAVEMENT FOR TEMPORARY TRAFFIC USE.

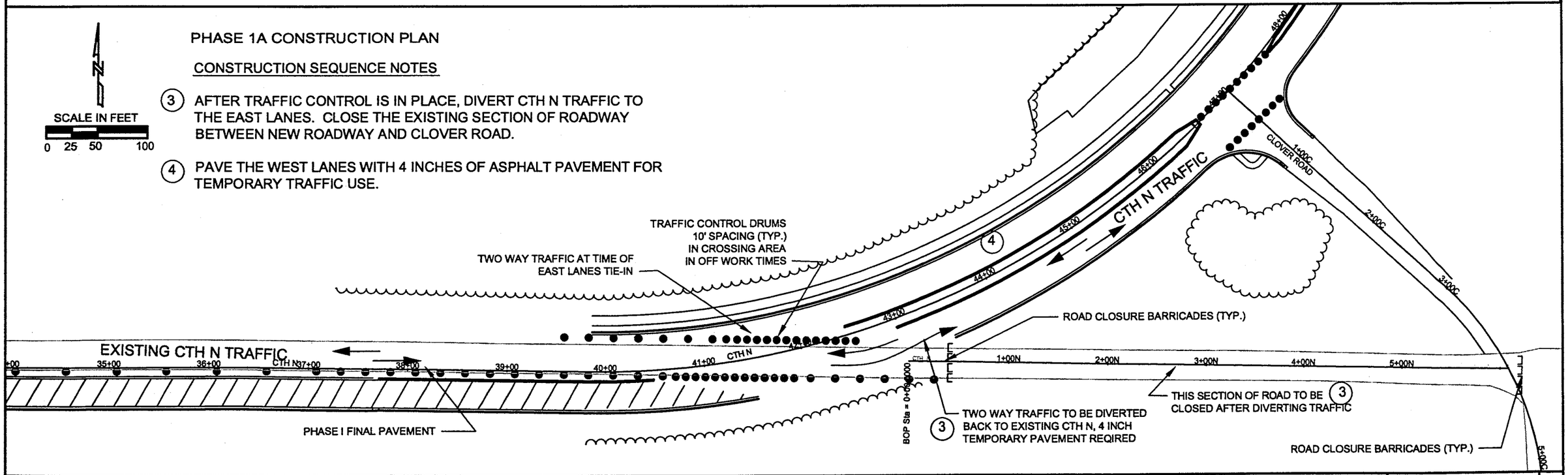

STATE PROJECT NUMBER: 6651-01-00	HWY: CTH N	COUNTY: MARATHON	PHASE 1A & 1B CONSTRUCTION PLANS	SHEET NO: 2.30	E

P:\Driver\28940\01 CTH N\02 LILY\Phase\CONSTRUCTION\DETAILS.dwg, Layout1, 10/07/2008 08:30:41 AM

SCALE IN FEET

0 50 100 200

CONSTRUCTION SEQUENCE NOTES

1. GRIND INPLACE THE EXISTING ASPHALT PAVEMENT AND RECYCLE AS A BOTTOM LAYER OF CRUSHED AGGREGATE BASE COURSE.
2. REMOVE EARTHEN FILL ROAD EMBANKMENT FROM EXISTING SECTION OF OLD CTH N. EXCAVATION SHALL BE USED AS FILL OF PHASE 2.
3. RECONSTRUCTION OF SOUTH MOUNTAIN ROAD, RIB MOUNTAIN DRIVE AND CLOVER ROAD MAY BE STARTED ANY TIME AFTER CTH N TRAFFIC SWITCHED TO PHASE 2. EXCESS EXCAVATION SHALL BE USED AS FILL ON PHASE 2.
4. ALL RESTORATION TO THE BORROW SITE SHALL BE FINISHED PRIOR TO CLOSING THE TRAFFIC GAP IN THE CURB AND GUTTER SECTION.
5. FINAL PAVEMENT MARKINGS OF PHASE 1 & 2 SHALL BE APPLIED AFTER PHASE 2 COMPLETED.
6. ANY EXCESS EXCAVATION MAYBE FORMED INTO A VISION AND SOUND BARRIER ALONG THE WEST SIDE OF THE EAST RIGHT OF WAY.

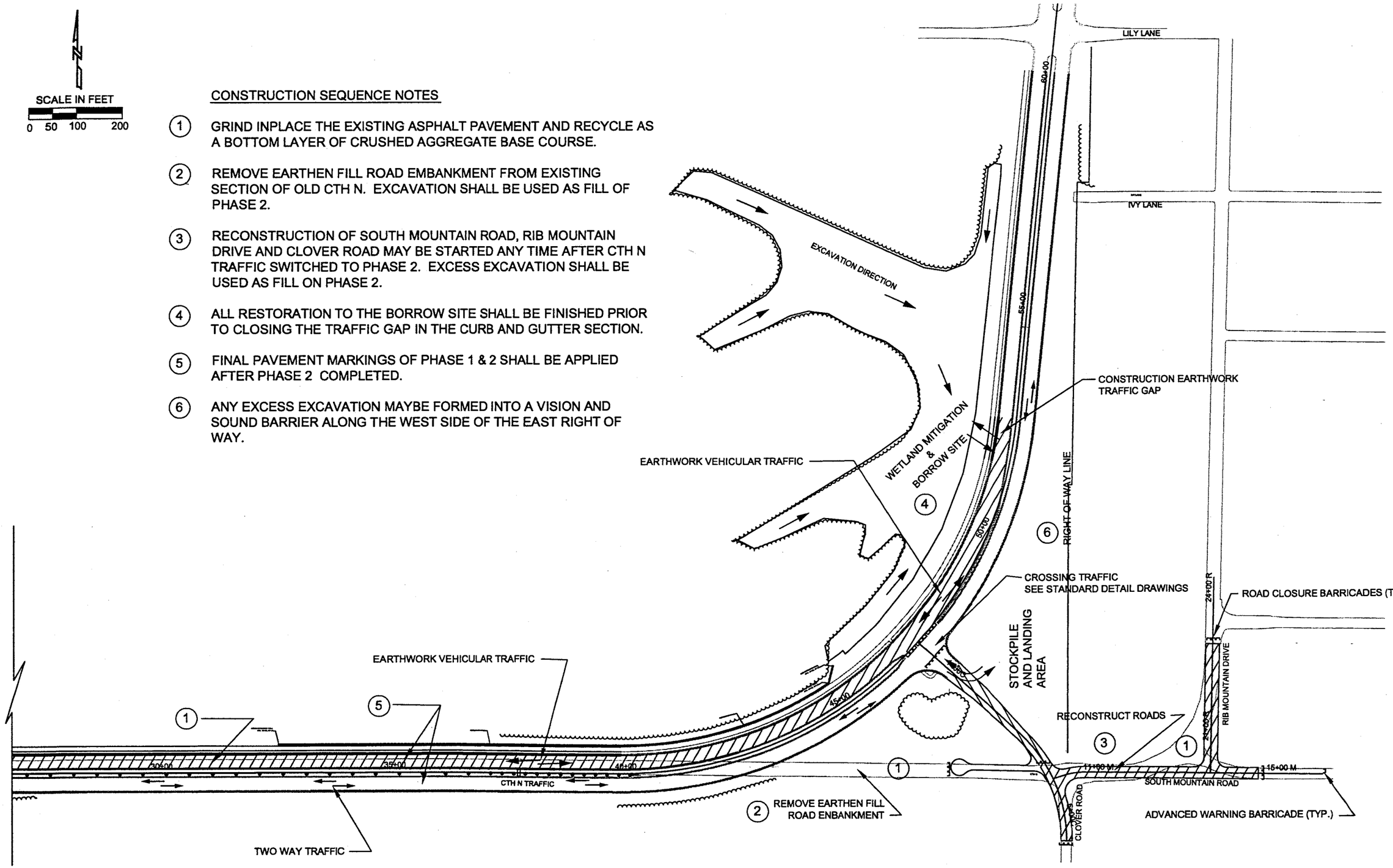

STATE PROJECT NUMBER: 6651-01-00	HWY: CTH N	COUNTY: MARATHON	PHASE 2 CONSTRUCTION PLAN	SHEET NO: 2.31	E

P:\DRAFT\28940100 CTH N West Arterial\topo survey\CTH N topo.DWG, PHASE2, 10/07/2003 09:22:25 AM

SCALE IN FEET

0 20 40 80

CONSTRUCTION SEQUENCE NOTES

1. IMPLEMENT DETOUR OPTION ON CTH KK AND FOCUS EFFORTS ON DIMINISHING THE ROAD CLOSURE TIME.
2. CTH N TRAFFIC WESTBOUND SHALL CROSS OVER MOUNTABLE MEDIAN THROUGH OUT PHASE 2 CONSTRUCTION.
3. INSTALL FINAL PAVEMENT MARKINGS ON KK PRIOR TO OPENING TO TRAFFIC.
4. FINAL PAVEMENT MARKINGS OF PHASE 1 & 2 SHALL BE APPLIED AFTER PHASE 2 IS COMPLETED.

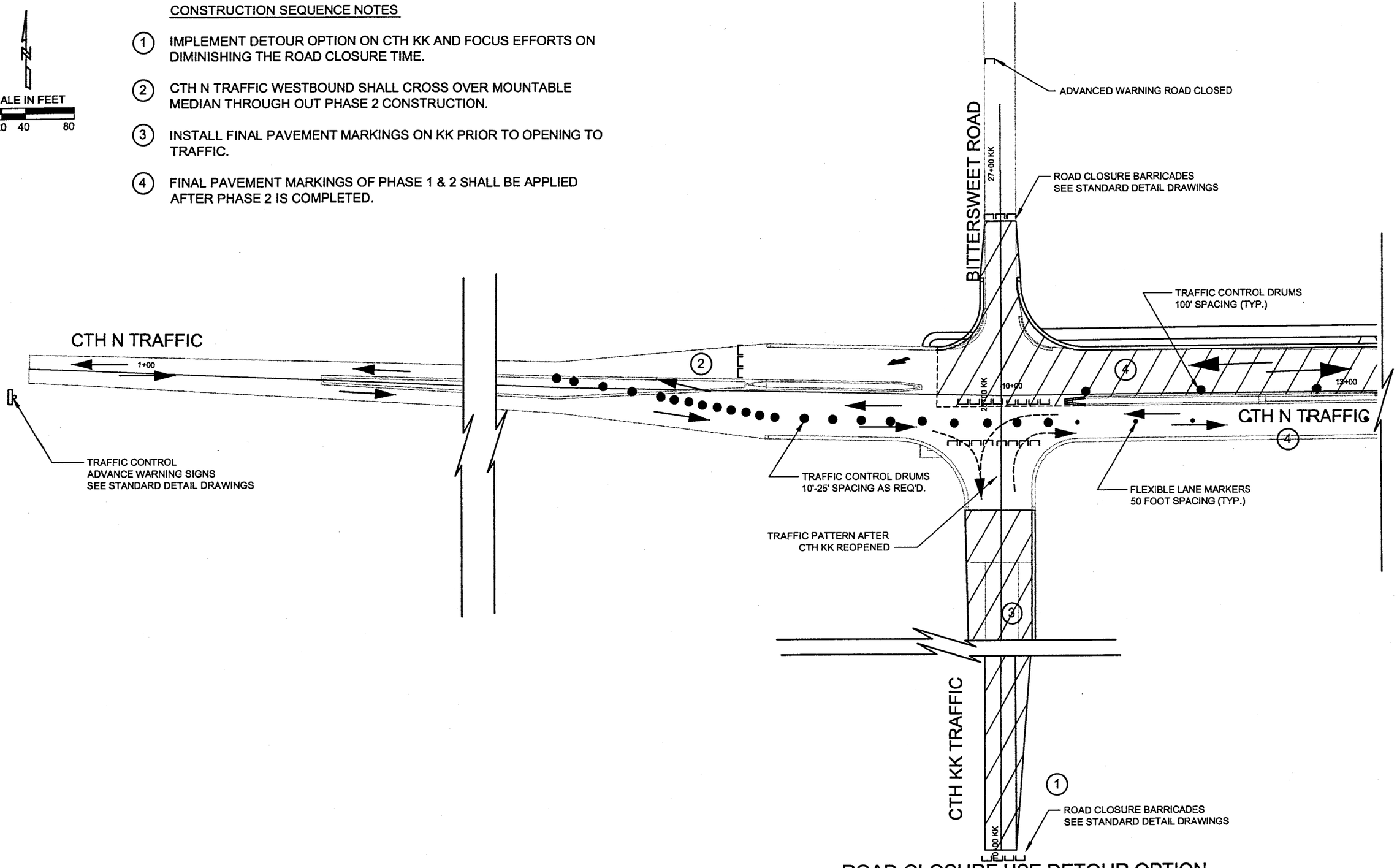

ROAD CLOSURE USE DETOUR OPTION

STATE PROJECT NUMBER: 6651-01-00	HWY: CTH N	COUNTY: MARATHON	PHASE 2 CONSTRUCTION PLAN	SHEET NO: 2.32	E

P:\dmft28940100 cth n west arterial\topo survey\CTH N topo.dwg, PHASE2-2, 2/25/2004 2:44:32 PM

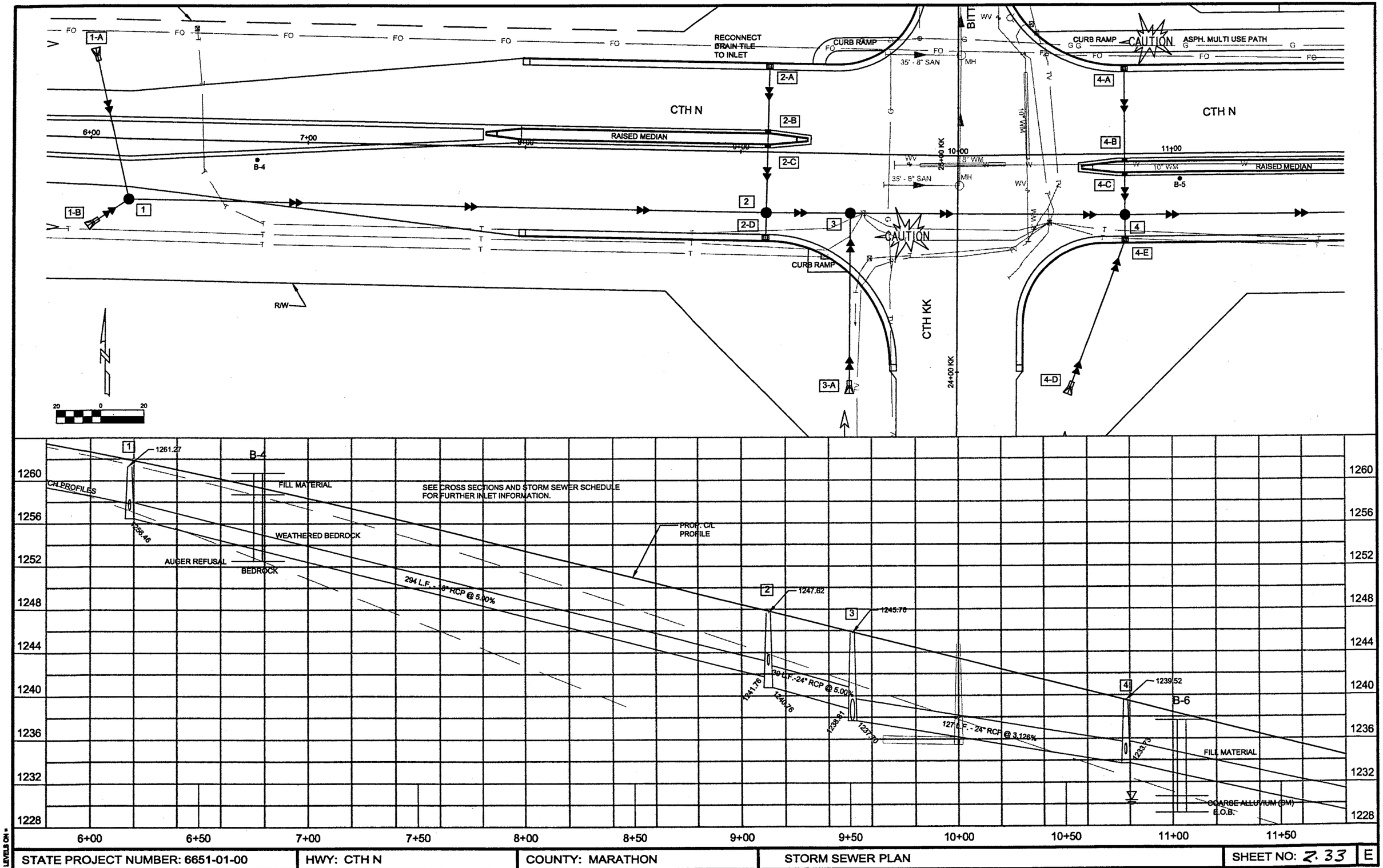

STATE PROJECT NUMBER: 6651-01-00	HWY: CTH N	COUNTY: MARATHON	STORM SEWER PLAN	SHEET NO: 2.33	E

FILE NAME : PLOT DATE: 1 2 3 PLOT SCALE : WISDOT/CADDS SHEET 40

LEVELS ON =

P:\DPA\128940100 CTH N West Arterial\ops survey\Rcp12001.dwg, Layout1, 10/07/2003 12:54:41 PM

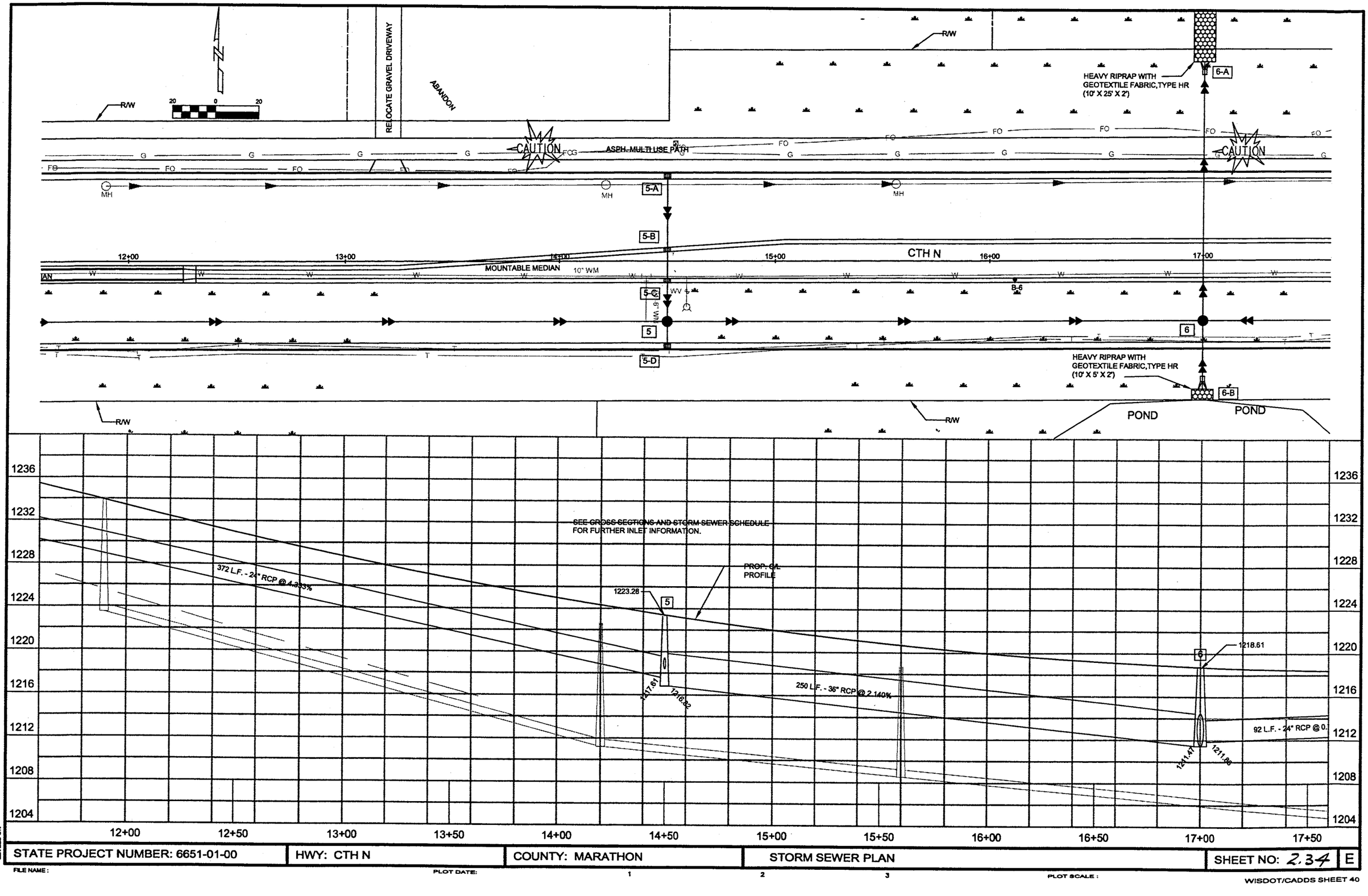

STATE PROJECT NUMBER: 6651-01-00	HWY: CTH N	COUNTY: MARATHON	STORM SEWER PLAN	SHEET NO: 2.34	E

FILE NAME: PLOT DATE: 1 2 3 PLOT SCALE:

WISDOT/CADDS SHEET 40

P:\DRAFT\28940100 CTH N West Arterial\topo survey\RCp13001.dwg, Layout1, 10/07/2003 12:55:03 PM

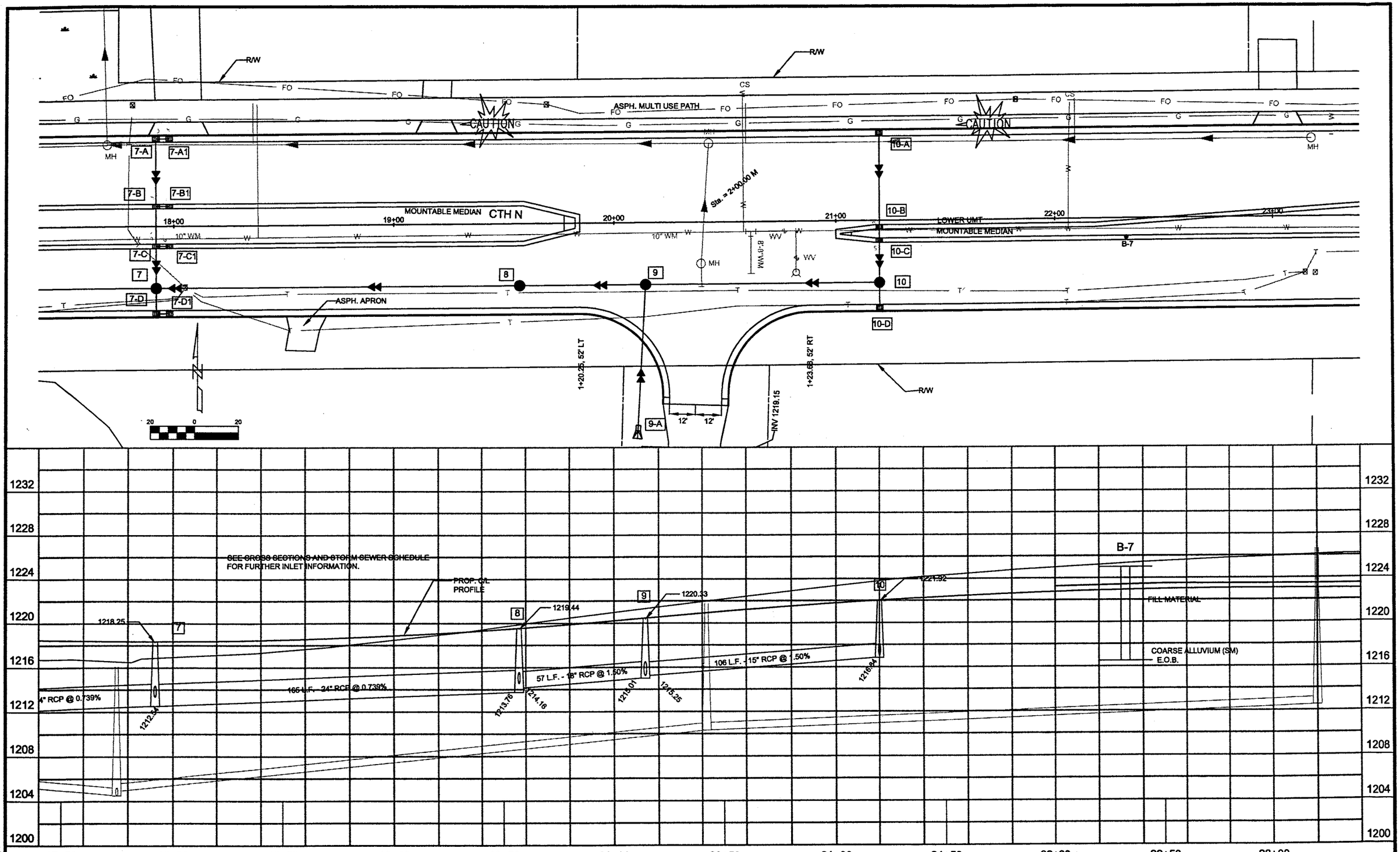

STATE PROJECT NUMBER: 6651-01-00	HWY: CTH N	COUNTY: MARATHON	STORM SEWER PLAN	SHEET NO: 2.35 E

FILE NAME: P:\DRAFT\26940100 CTH N West Arterial\topo survey\RCp14001.dwg, Layout1, 12/04/2003 03:18:42 PM

PLOT DATE: 1 2 3

PLOT SCALE:

LEVELS ON

WISDOT/CADDS SHEET 40

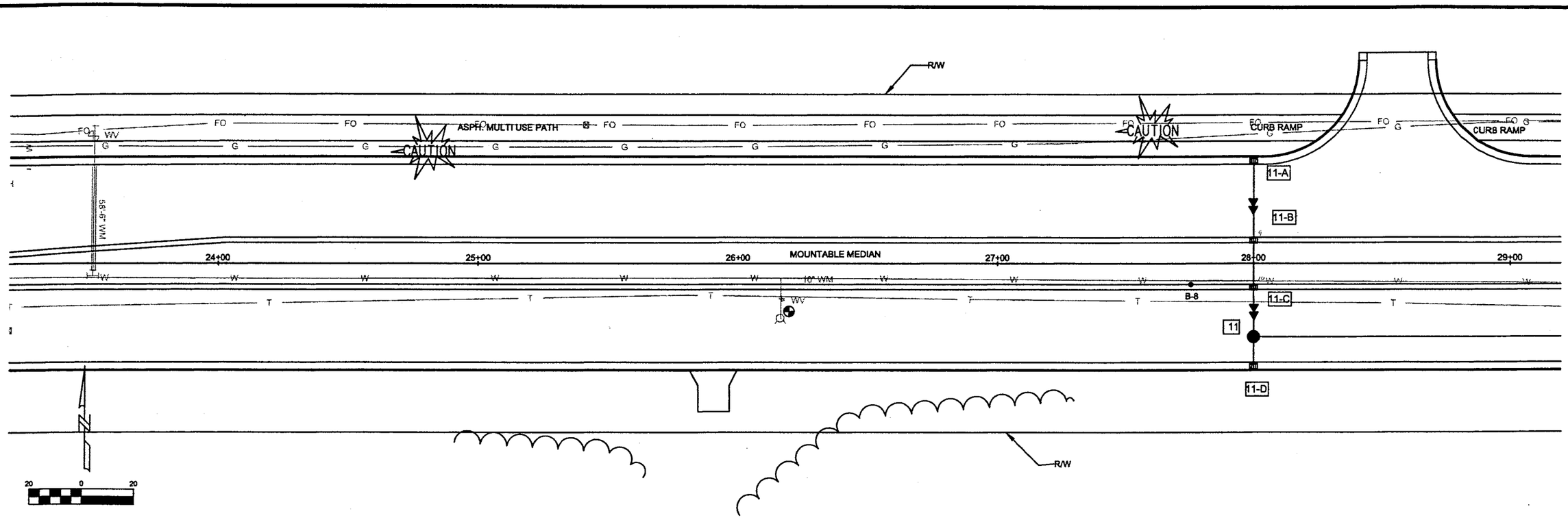

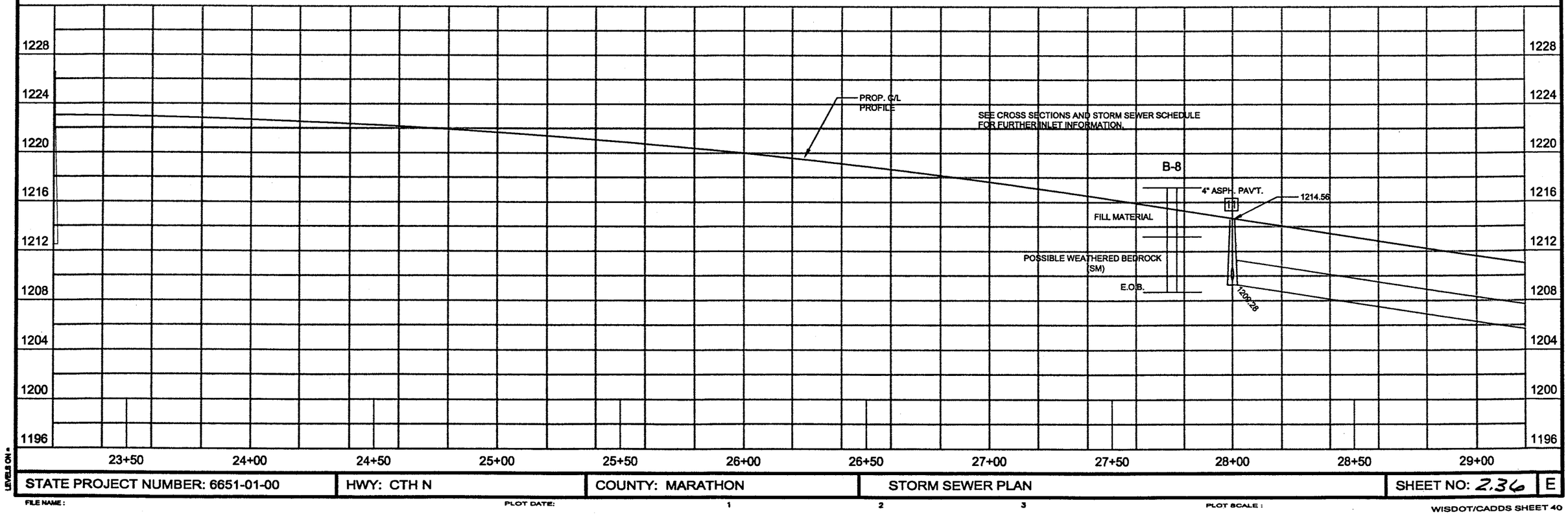

STATE PROJECT NUMBER: 6651-01-00	HWY: CTH N	COUNTY: MARATHON	STORM SEWER PLAN	SHEET NO: 2.36	E

P:\DRAFT\28940100 CTH N West Arterial\topo survey\RCp15001.dwg, Layout1, 10/07/2003 12:56:27 PM

LEVELS ON =

FILE NAME :

PLOT DATE:

1 2 3

PLOT SCALE :

WISDOT/CADDS SHEET 40

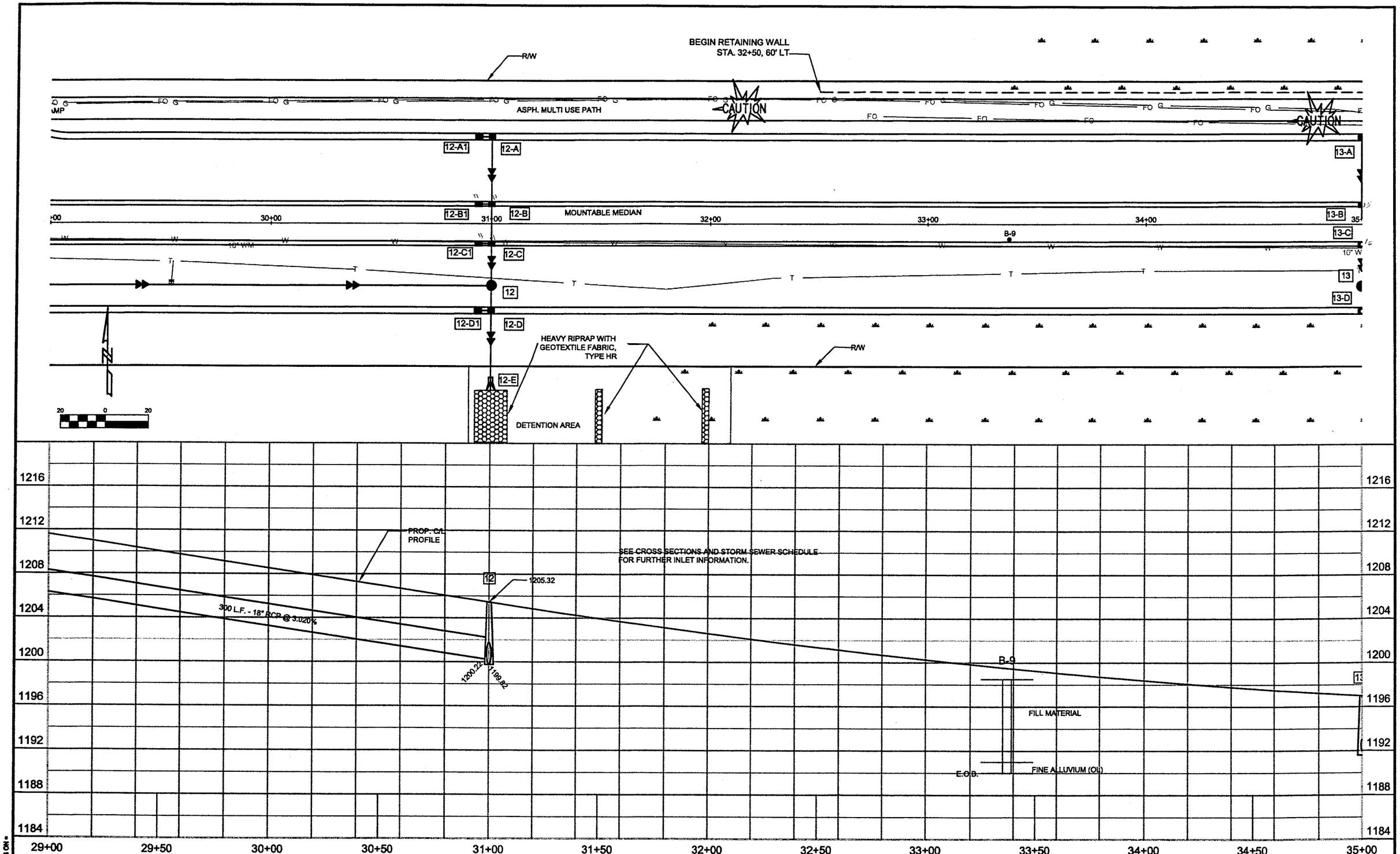

STATE PROJECT NUMBER: 6651-01-00	HWY: CTH N	COUNTY: MARATHON	STORM SEWER PLAN	SHEET NO: 2.37	E

FILE NAME : PLOT DATE: 1 2 3 PLOT SCALE :

WISDOT/CADDS SHEET 40

RETAINING WALL

R/W

ASPH. MULTI USE PATH

CAUTION

13-A

14-A

13-B

13-C

13

13-D

14-B

14-C

14

14-D

35+00

MOUNTABLE MEDIAN

36+00

CTH N

37+00

38+00

TAPER B.O.C.
SEE DETAIL
RAISED MEDIAN

39+00

40+00

RAISED MEDIAN

B-10

MH

10" WM

R/W

QUARTER LINE

SEE CROSS SECTIONS AND STORM SEWER SCHEDULE FOR FURTHER INLET INFORMATION.

PROP. C/L PROFILE

1196.87

1194.67

1191.59

300 L.F. - 24" RCP @ 0.667%

300 L.F. - 24" RCP @ 0.720%

FILL MATERIAL

POSSIBLE SWAMP DEPOSIT (OL)

1189.59

1189.59

E.O.B.

COARSE ALLUVIUM (SP)

1200
1196
1192
1188
1184
1180
1176
1172
1168

35+00 35+50 36+00 36+50 37+00 37+50 38+00 38+50 39+00 39+50 40+00 40+50

STATE PROJECT NUMBER: 6651-01-00	HWY: CTH N	COUNTY: MARATHON	STORM SEWER PLAN	SHEET NO: 2.38	E

FILE NAME : P:\DRAFT\28940100 CTH N West Arterial\topo survey\RCp17001.dwg, Layout1, 10/06/2003 10:35:00 AM

PLOT DATE:

PLOT SCALE :

LEVELS ON =

WISDOT/CADDS SHEET 40

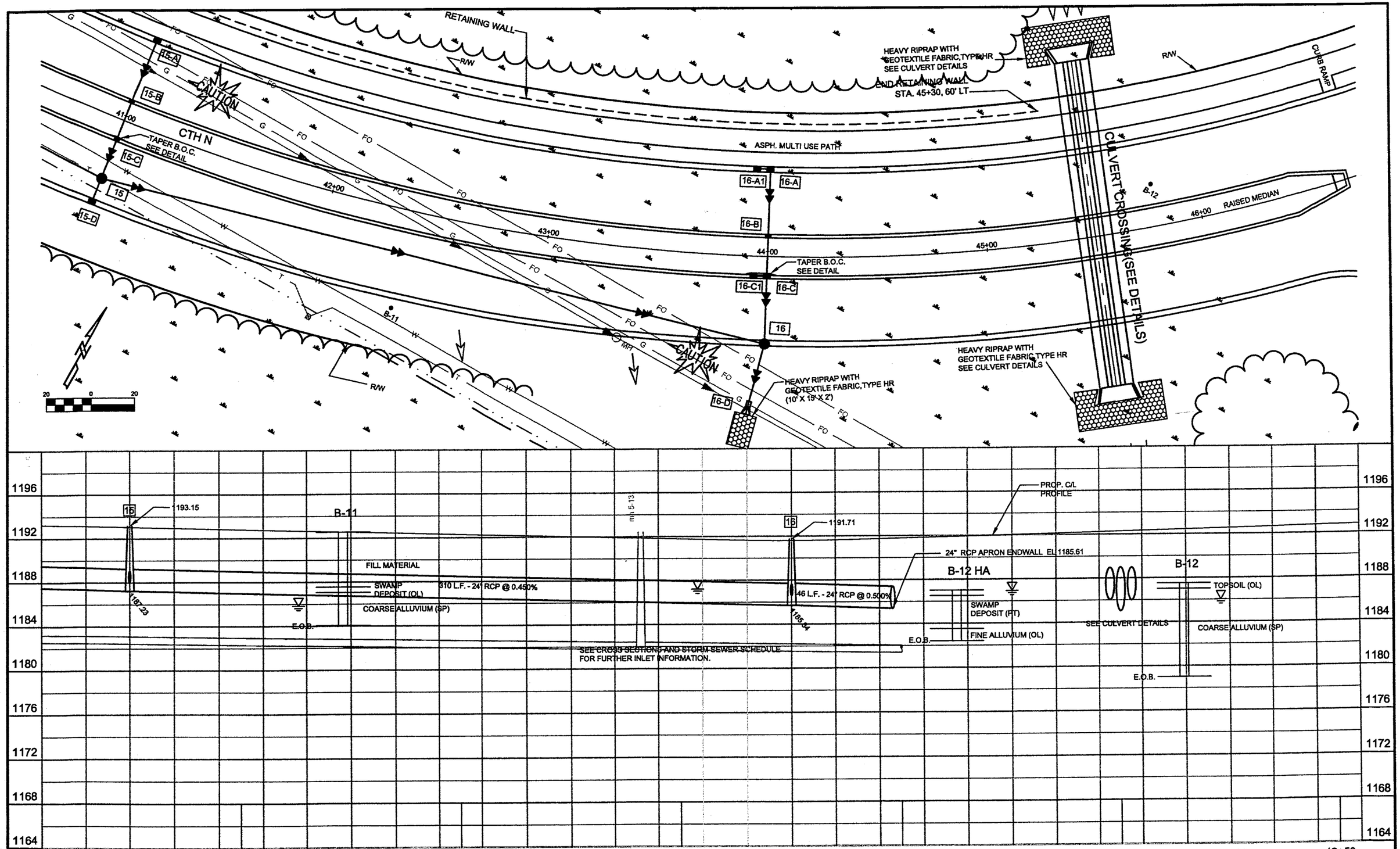

STATE PROJECT NUMBER: 6651-01-00	HWY: CTH N	COUNTY: MARATHON	STORM SEWER PLAN	SHEET NO: 2.39	E

FILE NAME : PLOT DATE: 1 2 3 PLOT SCALE : WISDOT/CADDS SHEET 40

P:\DRAFT\28940100 CTH N West Arterial\topo survey\RCp18001.dwg, Layout1, 02/26/2004 07:42:42 AM

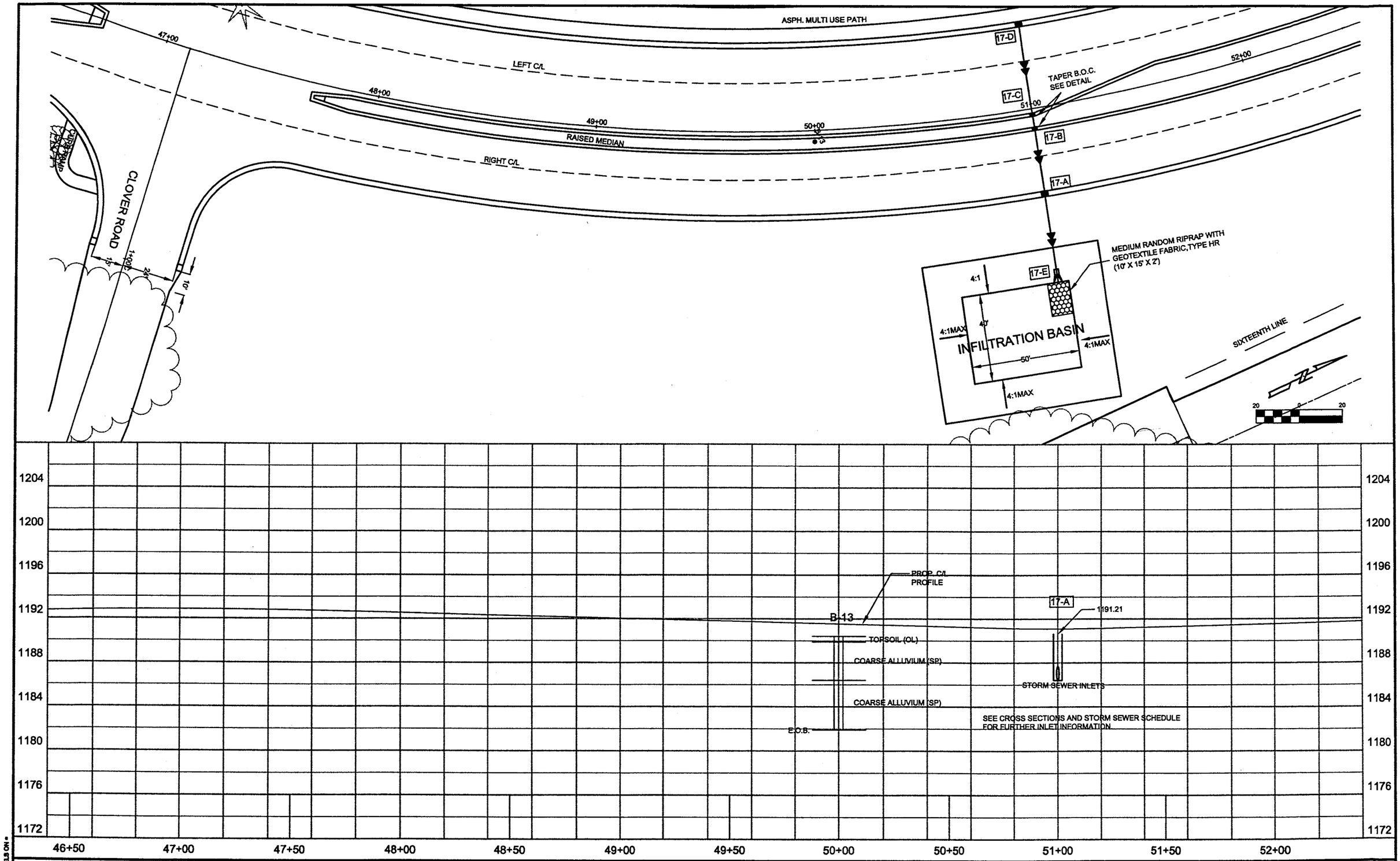

STATE PROJECT NUMBER: 6651-01-00	HWY: CTH N	COUNTY: MARATHON	STORM SEWER PLAN	SHEET NO: 2.40	E

FILE NAME : PLOT DATE: 1 2 3 PLOT SCALE :

WISDOT/CADDS SHEET 40

MEDIUM RANDOM RIPRAP WITH GEOTEXTILE FABRIC, TYPE HR (10' X 10' X 2')

18-C

SIXTEENTH LINE

R/W

ASPH. MULTI USE PATH

18

CTH N

837.09'

57+00

58+00

18-B

59+00

60+00

61+00

62+

19

SEE STATE PROJECT 6651-01-71

CAUTION

18-A

SIXTEENTH LINE

LILY LANE

20 0 20

1200
1196
1192
1188
1184
1180
1176
1172
1168

PROP. C/L PROFILE

18

1190.53

VPI 60+00.00
EL 1192.22

19

ADJOINING PROJECT INLET MANHOLE

210 L.F. - 24" RCP @ 0.757%

1189.24

1186.93

NOTE: ACTUAL TIE-IN LOCATION TO BE COORDINATED BETWEEN CONTRACTORS.

SEE CROSS SECTIONS AND STORM SEWER SCHEDULE FOR FURTHER INLET INFORMATION.

56+00 56+50 57+00 57+50 58+00 58+50 59+00 59+50 60+00 60+50 61+00 61+50 62+00

STATE PROJECT NUMBER: 6651-01-00	HWY: CTH N	COUNTY: MARATHON	STORM SEWER PLAN	SHEET NO: 2.41	E

FILE NAME : P:\DRAFT\26940100 CTH N West Arterial\topo survey\RCp20001.dwg, Layout1, 10/06/2003 11:08:04 AM

PLOT DATE:

LEVELS ON = 1 2 3

PLOT SCALE :

WISDOT/CADDS SHEET 40

STORM SEWER SCHEDULE

UNIT NO.	STATION	LOCATION	CENTER TO CENTER FEET	TO UNIT	INLET & COVER TYPES	MH & COVER TYPES	RIM GRATE ELEVATION	TOP OF STRUCTURE ELEVATION	DEPTH FEET	DISCHARGE PIPE INFORMATION							REMARKS (EXTRA PIPE INVERT ELEVATIONS)
										12 INCH L.F.	15 INCH L.F.	18 INCH L.F.	24 INCH L.F.	36 INCH L.F.	INLET ELEVATION	DISCHARGE ELEVATION	
1	6+18	28.0' RT	294	2	-	1-J	1261.27	1260.02	3.56			294			1256.46	1241.76	(1257.26 12" N) (1257.82 12" S)
1-A	6+00	41.0' LT	71	1	-	-	-	-	-	71					1258.69	1257.27	APRON ENDWALL, 12"
1-B	6+00	41.0' RT	23	1	-	-	-	-	-	23					1258.69	1258.46	APRON ENDWALL, 12"
2	9+12	28.0' RT	39	3	-	1-J	1247.62	1246.37	5.61				39		1240.76	1238.81	(1241.76 18" W) (1242.83 12"N) (1242.39 12"S)
2-A	9+12	39.5' LT	30	2-B	3-HM	-	1247.31	1246.51	3.00	30					1243.51	1243.21	
2-B	9+12	9.5' LT	7	2-C	1-Z	-	1247.45	1246.59	3.38	7					1243.21	1243.14	
2-C	9+12	2.5' LT	30.5	2	1-Z	-	1247.21	1246.35	3.21	30.5					1243.14	1242.83	
2-D	9+12	39.5' RT	11.5	2	3-HM	-	1247.31	1246.51	3.00	11.5					1243.51	1243.39	
3	9+51	28.0' RT	127	4	-	1MOD-J	1245.76	1244.51	6.81				127		1237.70	1233.73	60" DIA.(1237.70 24" S) (1238.81 18" W)
3-A	23+90KK	50.5' LT	83	3	-	-	-	-	-				83		1240.19	1237.70	APRON ENDWALL, 24"
4	10+78	28.0' RT	372	5	-	1-J	1239.52	1238.27	4.54				372		1233.73	1217.61	(1233.73 24" W) (1234.53 12" N) (1235.09 12" S)
4-A	10+78	39.5' LT	42	4-B	3-HM	-	1239.01	1238.21	3.00	42					1235.21	1234.79	
4-B	10+78	2.5' LT	7	4-C	1-Z	-	1238.91	1238.05	3.26	7					1234.79	1234.72	
4-C	10+78	9.5' RT	18.5	4	1-Z	-	1239.15	1238.29	3.57	18.5					1234.72	1234.53	
4-D	23+90KK	51.5' RT	75	4-E	-	-	-	-	-	75					1239.90	1235.21	APRON ENDWALL, 12"
4-E	10+78	39.5' RT	11.5	4	3-HM	-	1239.01	1238.21	3.00	11.5					1235.21	1235.09	
5	14+50	28.0' RT	250	6	-	1MOD-J	1223.28	1222.03	5.21					250	1216.82	1211.47	60" DIA.(1217.61 24" W)(1218.41 12"N)(1218.96 12"N)
5-A	14+50	39.5' LT	34	5-B	3-HM	-	1222.88	1222.08	3.00	34					1219.08	1218.74	
5-B	14+50	5.25' LT	14	5-C	3-H	-	1222.88	1222.08	3.34	14					1218.74	1218.60	CURB PLATE
5-C	14+50	9.0' RT	19	5	3-H	-	1222.96	1222.16	3.56	19					1218.60	1218.41	CURB PLATE
5-D	14+50	39.5' RT	11.5	5	3-HM	-	1222.88	1222.08	3.00	11.5					1219.08	1218.96	
6	17+00	28.0' RT	120	6-A	-	3MOD-J	1218.61	1217.36	5.89					120	1211.47	1208.43	96" DIA.(1211.86 24" E) (1211.47 36" W)
6-A	17+00	92.0' LT	-	-	-	-	-	-	-						-	-	APRON ENDWALL, 36"
6-B	17+00	60.0' RT	32	6	-	-	-	-	-					32	1212.28	1211.47	APRON ENDWALL, 36"
7	17+92	28.0' RT	92	6	-	1-J	1218.25	1217.00	4.46				92		1212.54	1211.86	(1213.37 12" N) (1213.92 12" S)
7-A	17+92	39.5' LT	30.5	7-B	3-HM	-	1217.85	1217.05	3.00	30.5					1214.05	1213.74	
7-A1	17+98	39.5' LT	6	7-A	3-HM	-	1217.85	1217.13	3.94	6					1214.11	1214.05	
7-B	17+92	9.0' LT	18	7-C	3-H	-	1217.93	1217.13	3.39	18					1213.74	1213.56	CURB PLATE
7-B1	17+98	9.0' LT	6	7-B	3-H	-	1217.93	1217.13	3.33	6					1213.80	1213.74	
7-C	17+92	9.0' RT	19	7	3-H	-	1217.93	1217.13	3.57	19					1213.56	1213.37	CURB PLATE
7-C1	17+98	9.0' RT	6	7-C	3-H	-	1217.93	1217.13	3.51	6					1213.62	1213.56	
7-D	17+92	39.5' RT	11.5	7	3-HM	-	1217.85	1217.05	3.00	11.5					1214.05	1213.92	
7-D1	17+98	39.5' RT	6	7-D	3-HM	-	1217.85	1217.05	3.94	6					1214.11	1214.05	
8	19+57	28.0' RT	165	7	-	1-J	1219.44	1218.19	4.43				165		1213.76	1212.54	(1214.16 18" E) (1214.56 12" N) (1215.12 12" S)
8-A	19+57	39.5' LT	30.5	8-B	3-HM	-	1219.04	1218.24	3.00	30.5					1215.24	1214.93	
8-B	19+57	9.0' LT	18	8-C	3-H	-	1219.12	1218.32	3.39	18					1214.93	1214.75	CURB PLATE
8-C	19+57	9.0' RT	19	8	3-H	-	1219.12	1218.32	3.57	19					1214.75	1214.56	
8-D	19+57	39.5' RT	11.5	8	3-HM	-	1219.04	1218.24	3.00	11.5					1215.24	1215.12	
9	20+14	28.0' RT	57	8	-	1-J	1220.33	1219.08	4.07			57			1215.01	1214.16	(1215.25 15" E,S)
9-A	1+00M	24' LT	69	9	-	-	-	-	-		69				1218.59	1215.25	APRON ENDWALL, 15"
10	21+20	28.0' RT	106	9	-	1-J	1221.92	1220.67	3.83		106				1216.84	1215.25	(1217.04 12" N) (1217.60 12" S)
10-A	21+20	39.5' LT	42.5	10-B	3-HM	-	1221.52	1220.72	3.00	42.5					1217.72	1217.29	
10-B	21+20	3.0' RT	6	10-C	3-H	-	1221.36	1220.56	3.27	6					1217.29	1217.23	CURB PLATE
10-C	21+20	9.0' RT	19	10	3-H	-	1221.60	1220.80	3.57	19					1217.23	1217.04	CURB PLATE
10-D	21+20	39.5' RT	11.5	10	3-HM	-	1221.52	1220.72	3.00	11.5					1217.72	1217.60	

NOTES:
30"-36" CURB AND GUTTER GRATE ELEVATIONS = 0.2' - FLANGE ELEVATION.
18" CURB AND GUTTER GRATE ELEVATIONS = 0.14' - FLANGE ELEVATION.
TOP OF STRUCTURE OF MANHOLE = 1.25' - RIM ELEVATION.
TOP OF STRUCTURE OF INLET = 1.00' - FLANGE ELEVATION.
STANDARD ADJUSTMENT IS 6 INCHES.
(6% X 2' GUTTER WIDTH + 0.08') = 0.2'
(6% X 1' GUTTER WIDTH + 0.08') = 0.14'

	12 INCH L.F.	15 INCH L.F.	18 INCH L.F.	24 INCH L.F.	36 INCH L.F.
TOTAL L.F.	666.5	175	351	878	402

STORM SEWER SCHEDULE

UNIT NO.	STATION	LOCATION	CENTER TO CENTER FEET	TO UNIT	INLET & COVER TYPES	MH & COVER TYPES	RIM GRATE ELEVATION	TOP OF STRUCTURE ELEVATION	DEPTH FEET	DISCHARGE PIPE INFORMATION 12 INCH L.F.	15 INCH L.F.	18 INCH L.F.	24 INCH L.F.	36 INCH L.F.	INLET ELEVATION	DISCHARGE ELEVATION	LENGTH FEET	SLOPE %	REMARKS (EXTRA PIPE INVERT ELEVATIONS)
11	28+00	28.0' RT	300	12	-	1-J	1214.56	1213.31	4.03			300			1209.28	1200.22	300	3.02	(1209.68 12" N) (1210.24 12" S)
11-A	28+00	39.5' LT	30.5	11-B	3-HM	-	1214.16	1213.36	3.00	30.5					1210.36	1210.05	30.5	1.00	
11-B	28+00	9.0' LT	18	11-C	3-H	-	1214.24	1213.44	3.39	18					1210.05	1209.87	18	1.00	CURB PLATE
11-C	28-00	9.0' RT	19	11	3-H	-	1214.24	1213.44	3.57	19					1209.87	1209.68	19	1.00	CURB PLATE
11-D	28+00	39.5' RT	11.5	11	3-HM	-	1214.16	1213.36	3.00	11.5					1210.36	1210.24	11.5	1.00	
12	31+00	28.0' RT	11.5	12-D	-	1-J	1202.48	1204.07	4.25				11.5		1199.82	1199.42	11.5	3.45	(1197.20 18" W) (1197.60 12" N)
12-A	31+00	39.5' LT	30.5	12-B	3-HM	-	1204.92	1204.12	2.83	30.5					1201.29	1200.99	30.5	1.00	(1198.38 12" W)
12-A1	30+94	39.5' LT	6	12-A	3-HM	-	1205.10	1204.30	2.95	6					1201.35	1201.29	6	1.00	
12-B	31+00	9.0' LT	18	12-C	3-H	-	1205.00	1204.20	3.21	18					1200.99	1200.81	18	1.00	CURB PLATE (1198.46 12" W)
12-B1	30+94	9.0' LT	6	12-B	3-H	-	1205.18	1204.38	3.33	6					1201.05	1200.99	6	1.00	CURB PLATE
12-C	31+00	9.0' RT	19	12	3-H	-	1205.00	1204.20	3.39	19					1200.81	1200.62	19	1.00	CURB PLATE (1198.46 12" W)
12-C1	30+94	9.0' RT	6	12-C	3-H	-	1205.18	1204.38	3.51	6					1200.87	1200.81	6	1.00	CURB PLATE
12-D	31+00	39.5' RT	36.5	12-E	-	1-HM	1204.92	1204.12	4.70				36.5		1199.42	1198.16	36.5	3.45	TYPE HM INLET COVER (1198.38 12" W)
12-D1	30+94	39.5' RT	6	12-D	3-HM	-	1205.10	1204.30	4.82	6					1199.48	1199.42	6	1.00	
12-E	31+00	76.0' RT	-	-	-	-	-	-	-						-	-	-	-	APRON ENDWALL, 24"
13	35+00	28.0' RT	300	14	-	1-J	1196.87	1195.62	4.03				300		1191.59	1189.59	300	0.67	(1191.99 12" N) (1192.55 12" S)
13-A	35+00	39.5' LT	30.5	13-B	3-HM	-	1196.47	1195.67	3.00	30.5					1192.67	1192.36	30.5	1.00	
13-B	35+00	9.0' LT	18	13-C	3-H	-	1196.55	1195.75	3.39	18					1192.36	1192.18	18	1.00	CURB PLATE
13-C	35+00	9.0' RT	19	13	3-H	-	1196.55	1195.75	3.57	19					1192.18	1191.99	19	1.00	CURB PLATE
13-D	35+00	39.5' RT	11.5	13	3-HM	-	1196.47	1195.67	3.00	11.5					1192.67	1192.55	11.5	1.00	
14	38+00	28.0' RT	300	15	-	1-J	1194.67	1193.42	4.03				300		1189.39	1187.23	300	0.72	(1189.59 18" W) (1189.77 12" N) (1190.40 12" S)
14-A	38+00	39.5' LT	30.5	14-B	3-H	-	1194.25	1193.45	3.00	30.5					1190.45	1190.14	30.5	1.00	
14-B	38+00	9.0' LT	18	14-C	3-H	-	1194.38	1193.58	3.44	18					1190.14	1189.96	18	1.00	TAPER BACK OF CURB TO 18" GUTTER
14-C	38+00	9.0' RT	19	14	3-H	-	1194.25	1193.45	3.49	19					1189.96	1189.77	19	1.00	TAPER BACK OF CURB TO 18" GUTTER
14-D	38+00	39.5' RT	11.5	14	3-H	-	1194.31	1193.51	3.00	11.5					1190.51	1190.40	11.5	1.00	
15	41+00	28.0' RT	310	16	-	1-J	1193.15	1191.90	4.67				310		1187.23	1185.84	310	0.45	(1187.23 24" W) (1188.04 12" N) (1189.15 12" S)
15-A	41+00	39.5' LT	30	15-B	3-H	-	1192.51	1191.71	3.00	30					1188.71	1188.41	30	1.00	
15-B	41+00	9.25' LT	18	15-C	1-Z	-	1193.13	1192.27	3.86	18					1188.41	1188.23	18	1.00	
15-C	41+00	9.0' RT	19	15	3-H	-	1192.59	1191.79	3.56	19					1188.23	1188.04	19	1.00	TAPER BACK OF CURB TO 18" GUTTER
15-D	41+00	39.5' RT	11.5	15	1-A	-	1193.07	1192.27	3.00	11.5					1189.27	1189.15	11.5	1.00	
16	44+00	28.0' RT	46	16-D	-	1-HM	1191.71	1190.91	5.07				46		1185.84	1185.61	46	0.50	(1185.69 24" W) (1186.60 12" N) (1187.80 12" S)
16-A	44+00	39.5' LT	30	16-B	3-H	-	1191.07	1190.27	3.00	30					1187.27	1186.97	30	1.00	
16-A1	43+94	39.5' LT	6	16-A	3-H	-	1191.09	1190.29	2.96	6					1187.33	1187.27	6	1.00	
16-B	44+00	9.25' LT	18	16-C	1-Z	-	1191.69	1190.83	3.86	18					1186.97	1186.79	18	1.00	TAPER BACK OF CURB TO 18" GUTTER
16-C	44+00	9.0' RT	30	16	3-H	-	1191.15	1190.35	3.56	30					1186.79	1186.49	30	1.00	TAPER BACK OF CURB TO 18" GUTTER
16-C1	43+94	9.0' RT	6	16-C	3-H	-	1191.17	1190.37	3.52	6					1186.85	1186.79	6	1.00	
16-D	44+50	72.0' RT	-	-	-	-	-	-	-						-	-	-		APRON ENDWALL, 24"
17-A	51+00	39.5' RT	29	17-E	3-H	-	1191.21	1190.41	4.25		29				1186.16	1185.87	29	1.00	
17-B	51+00	9.0' RT	30.5	17-A	1-A	-	1190.65	1189.85	3.19	30.5					1186.66	1186.36	30.5	1.00	TAPER BACK OF CURB TO 18" GUTTER
17-C	51+00	3.0' LT	6	17-B	1-A	-	1190.93	1190.13	3.34	6					1186.79	1186.66	6	2.17	TAPER BACK OF CURB TO 18" GUTTER
17-D	51+00	39.5' LT	42.5	17-C	3-H	-	1190.57	1189.77	2.56	42.5					1187.21	1186.79	42.5	1.00	
17-E	51+00	82.5' RT-		-	-	-	-	-	-						-	-	-	-	APRON ENDWALL, 15"
18	58+28	39.5' LT	72	18-C	-	1MOD-H	1190.63	1189.83	4.59				72		1185.24	1185.00	72	0.33	60" DIA. TYPE H INLET COVER (1185.24 24" N) (1186.04 12" E)
18-A	58+28	39.5' RT	39.5	18-B	3-H	-	1190.63	1189.83	3.00	39.5					1186.83	1186.44	39.5	1.00	
18-B	58+28	0	39.5	18	1-B	-	1191.04	1189.79	3.35	39.5					1186.44	1186.04	39.5	1.00	
18-C	57+77	90' LT	-	-	-	-	-	-	-						-	-	-	-	APRON ENDWALL, 24"
19	60+38	39.5' LT	210	18	-	-	-	-	-				210		1186.83	1185.24	210	0.76	PROJECT 6651-01-71 INLET MANHOLE

NOTES: 30"-36" CURB AND GUTTER GRATE ELEVATIONS = 0.2' - FLANGE ELEVATION.
18" CURB AND GUTTER GRATE ELEVATIONS = 0.14' - FLANGE ELEVATION.
TOP OF STRUCTURE OF MANHOLE = 1.25' - RIM ELEVATION.
TOP OF STRUCTURE OF INLET = 1.00' - FLANGE ELEVATION.
STANDARD ADJUSTMENT IS 6 INCHES.
(6% X 2' GUTTER WIDTH + 0.08') = 0.2'
(6% X 1' GUTTER WIDTH + 0.08') = 0.14'

	12 INCH L.F.	15 INCH L.F.	18 INCH L.F.	24 INCH L.F.	36 INCH L.F.
TOTAL SHEET 2	655	29	300	1286	0
TOTAL SHEET 1	666.5	175	351	878	402
TOTAL	1321.5	204	651	2164	402

STATE PROJECT NUMBER: 6651-01-00	HWY: CTH N	COUNTY: MARATHON	STORM SEWER SCHEDULE	SHEET NO: 2.43	E

FILE NAME: P:\24519800\WisDOT STH 52\Details\MSBORDER.PRT ORIGINATOR: REV. DATE: PLOT DATE:

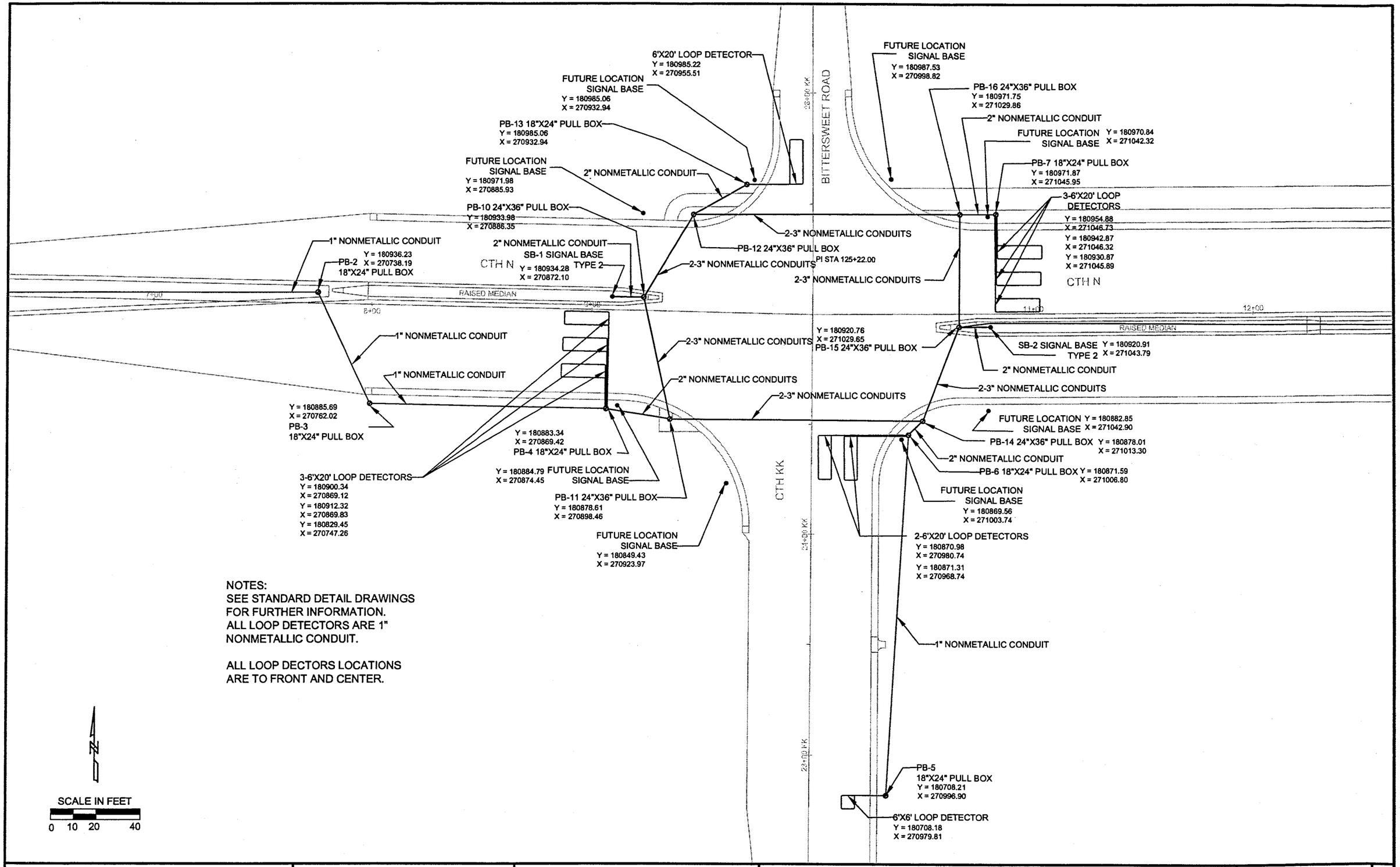

NOTES:
SEE STANDARD DETAIL DRAWINGS FOR FURTHER INFORMATION.
ALL LOOP DETECTORS ARE 1" NONMETALLIC CONDUIT.

ALL LOOP DECTORS LOCATIONS ARE TO FRONT AND CENTER.

SCALE IN FEET
0 10 20 40

P:\draft\28940100 cth n west arterial\topo survey\CTH N topo.dwg, SIGNAL, 2/19/2004 10:13:57 AM

STATE PROJECT NUMBER: 6651-01-00	HWY: CTH N	COUNTY: MARATHON	LOOP DETECTORS, BASES, CONDUITS AND PULL BOXES	SHEET NO: 2.44 E

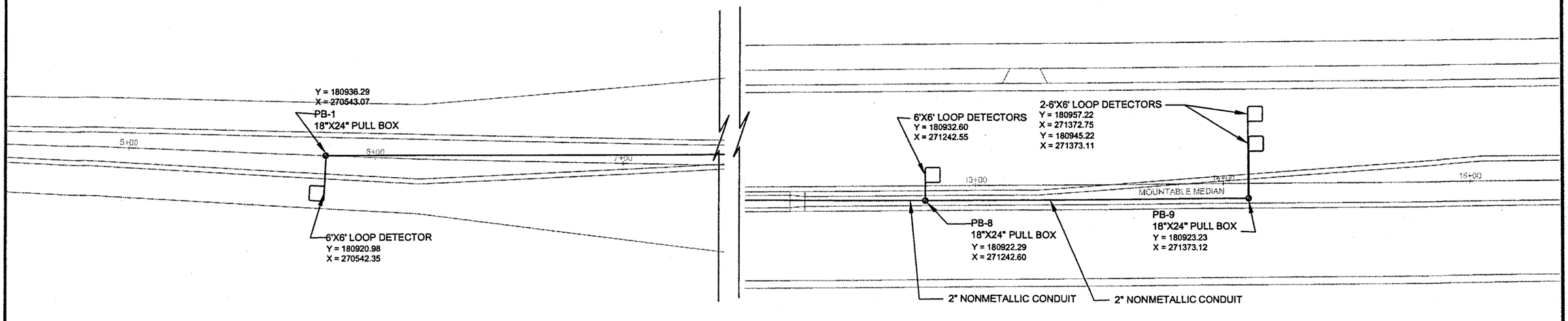

NOTES:
SEE STANDARD DETAIL DRAWINGS FOR FURTHER INFORMATION.
ALL LOOP DETECTORS ARE 1" NONMETALLIC CONDUIT.

ALL LOOP DECTORS LOCATIONS ARE TO FRONT AND CENTER.

N

SCALE IN FEET
0 10 20 40

STATE PROJECT NUMBER: 6651-01-00	HWY: CTH N	COUNTY: MARATHON	LOOP DETECTORS, BASES, CONDUITS AND PULL BOXES	SHEET NO: 2.45	E

P:\draft\28940100 cth n west arterial\topo survey\CTH N topo.dwg, SIGNAL (2), 2/19/2004 10:04:16 AM

NOTE:
SEE STANDARD DETAIL DRAWINGS
FOR FURTHER INFORMATION.

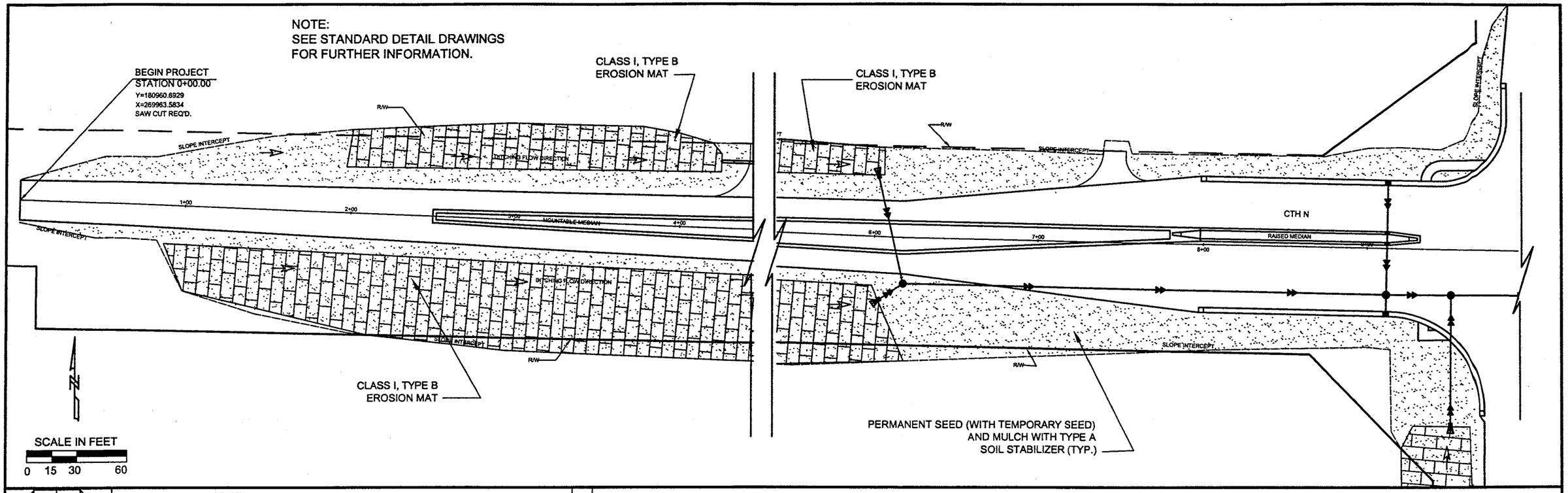

NOTE:
SEE STANDARD DETAIL DRAWINGS
FOR FURTHER INFORMATION.

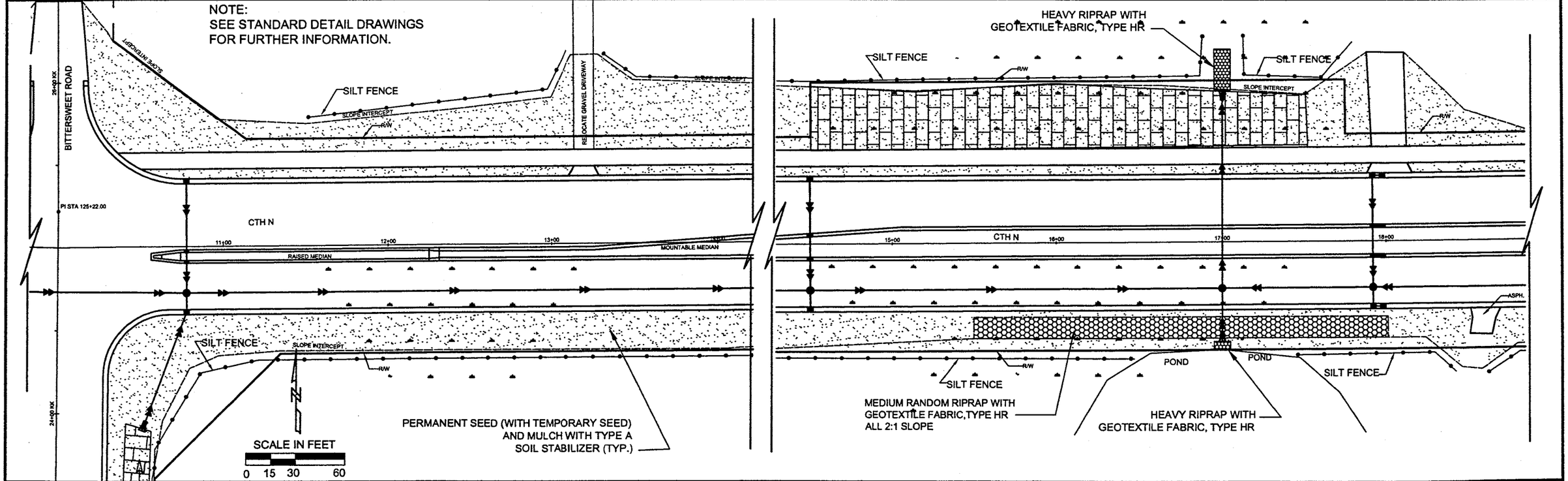

STATE PROJECT NUMBER: 6651-01-00	HWY: CTH N	COUNTY: MARATHON	RESTORATION AND EROSION CONTROL PLAN	SHEET NO: 2.46	E

P:\draft\28940100 cth n west arterial\topo survey\CTH N topo.dwg, EROSION, 2/24/2004 12:58:39 PM

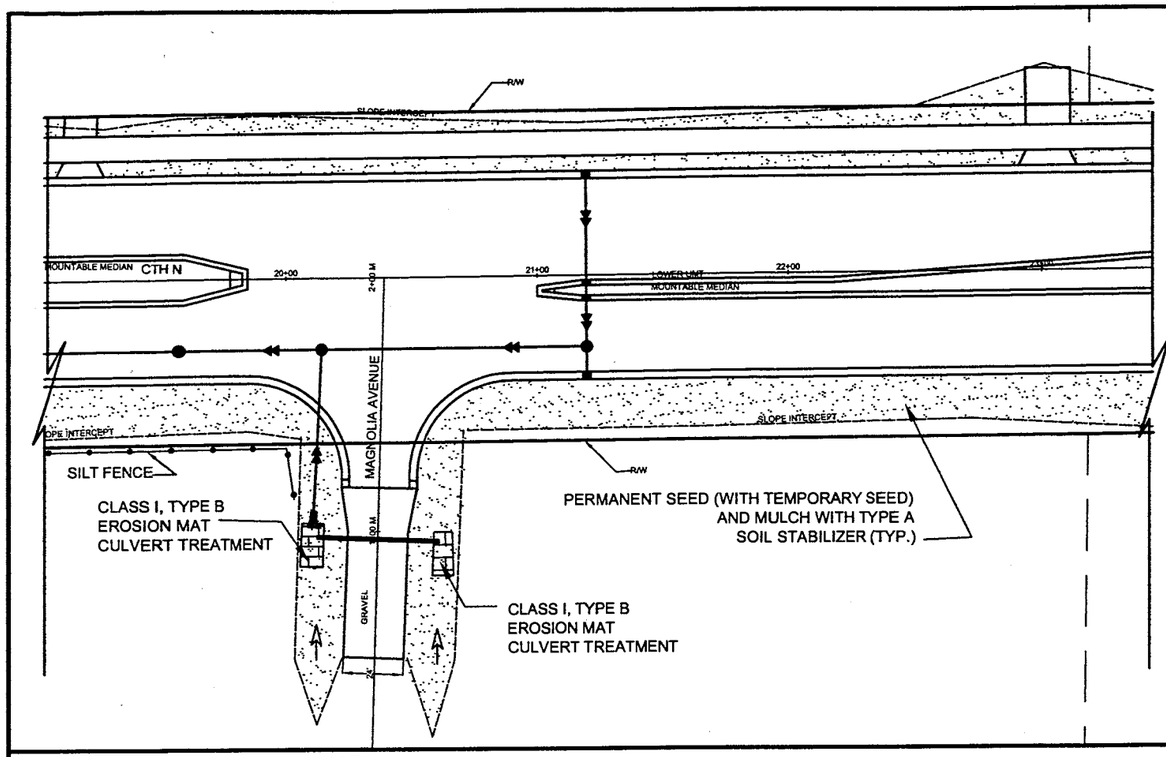

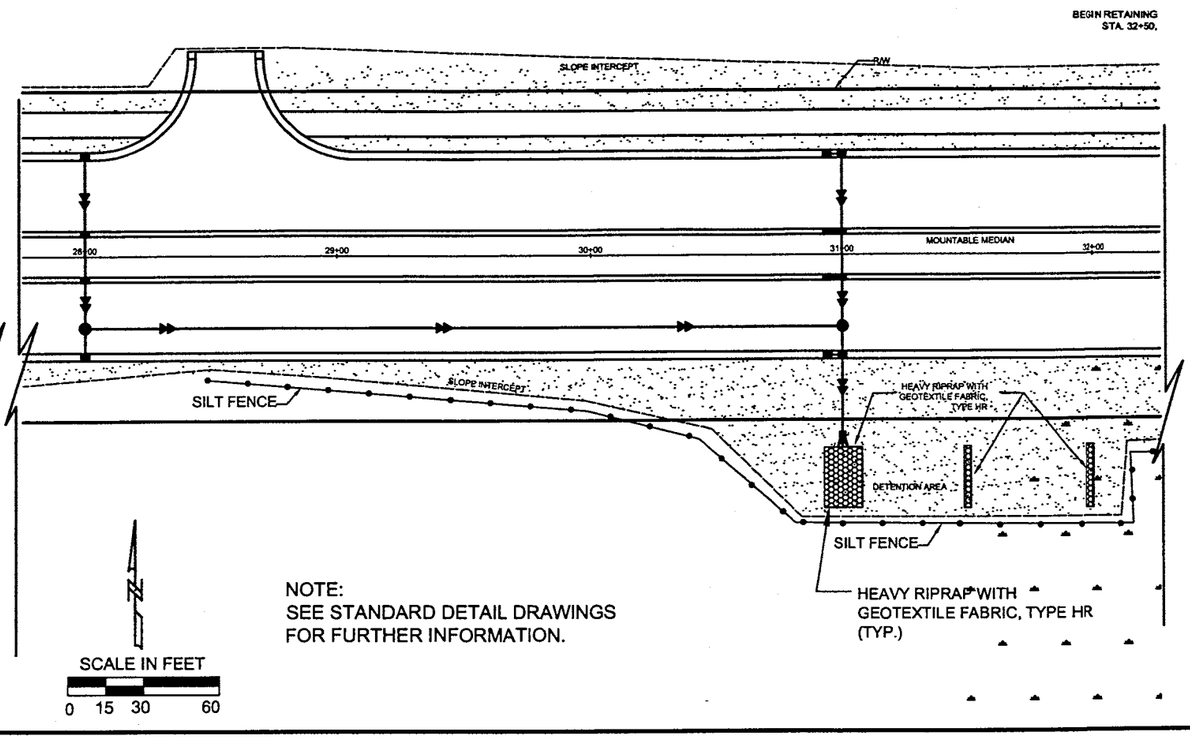

NOTE:
SEE STANDARD DETAIL DRAWINGS
FOR FURTHER INFORMATION.

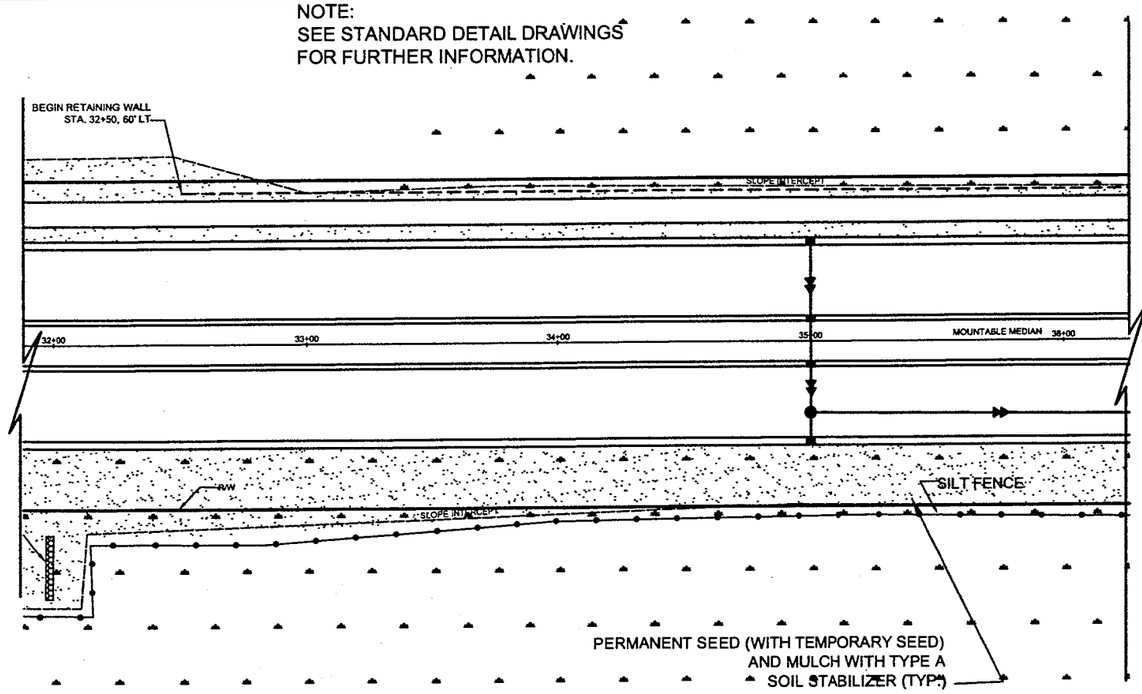

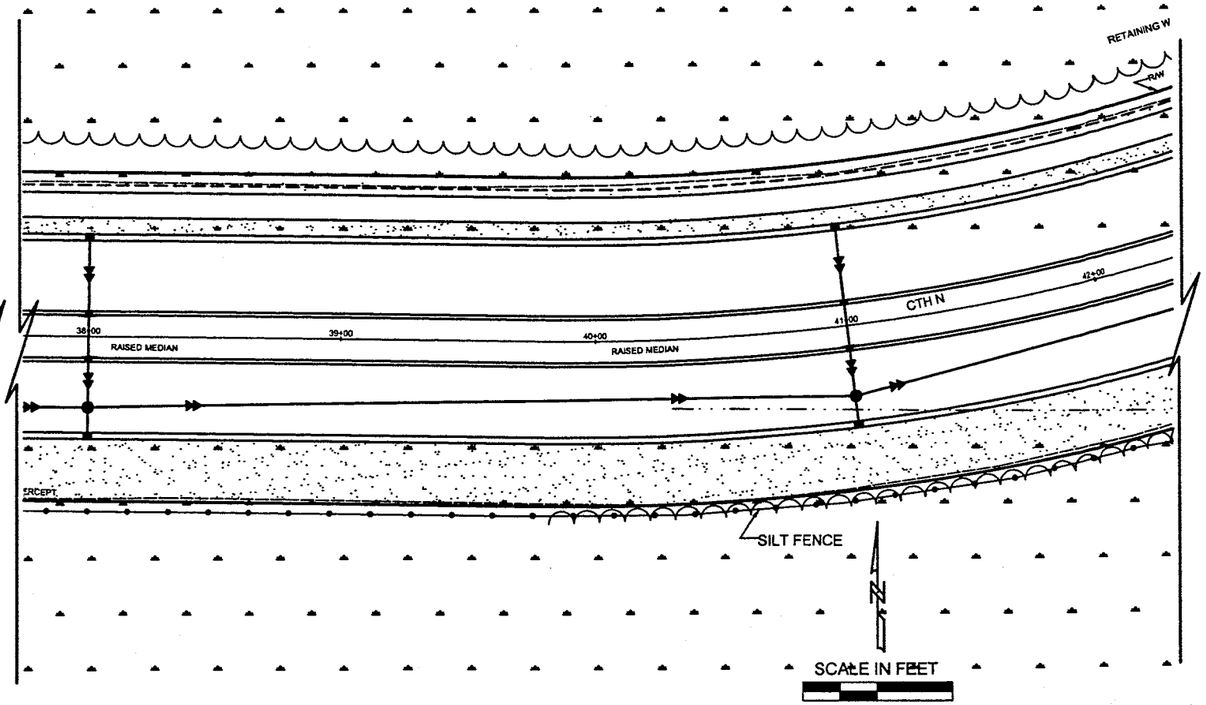

STATE PROJECT NUMBER: 6651-01-00	HWY: CTH N	COUNTY: MARATHON	RESTORATION AND EROSION CONTROL PLAN	SHEET NO: 2.47	E

P:\draft\28940100 cth n west arterial\topo survey\CTH N topo.dwg, EROSION2, 2/20/2004 7:50:50 AM

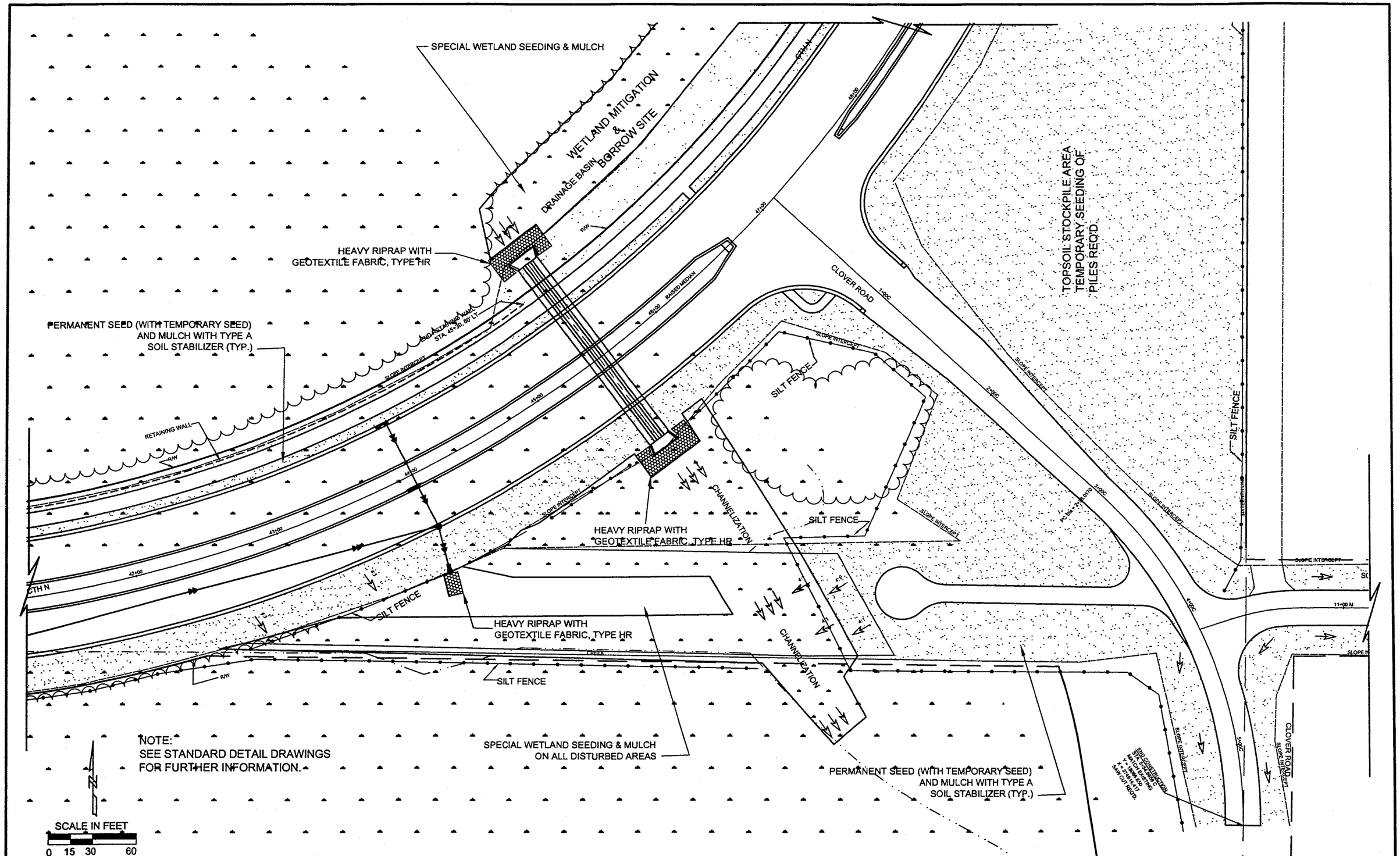

P:\draft\28940100 cth n west arterial\topo survey\CTH N topo.dwg, EROSION3, 2/20/2004 7:46:37 AM

STATE PROJECT NUMBER: 6651-01-00	HWY: CTH N	COUNTY: MARATHON	RESTORATION AND EROSION CONTROL PLAN	SHEET NO: 2.48	E

P:\DRAFT\28940100 CTH N West Arterial\topo survey\CTH N topo.dwg, EROSION4, 02/27/2004 10:28:22 AM

PERMANENT SEED (WITH TEMPORARY SEED) AND MULCH WITH TYPE A SOIL STABILIZER (TYP.)

SPECIAL WETLAND SEEDING & MULCH

WETLAND MITIGATION & BORROW SITE

DRAINAGE BASIN

DRAINAGE BASIN

DRAINAGE BASIN

SLOPE INTERCEPT

SLOPE INTERCEPT

RW

54:00

ASPH. RAISED MEDIAN

55:00

GRASS RAISED MEDIAN

53:00

53:00

51:00

49:00

MEDIUM RANDOM RIPRAP WITH GEOTEXTILE FABRIC, TYPE HR (10'X 15'X 2')

INFILTRATION BASIN

MEDIUM RANDOM RIPRAP WITH GEOTEXTILE FABRIC, TYPE HR

TOPSOIL STOCKPILE AREA
TEMPORARY SEEDING OF PILES REQ'D.

NOTE:
SEE STANDARD DETAIL DRAWINGS FOR FURTHER INFORMATION.

N

SCALE IN FEET

0 15 30 60

STATE PROJECT NUMBER: 6651-01-00	HWY: CTH N	COUNTY: MARATHON	RESTORATION AND EROSION CONTROL PLAN	SHEET NO: 2.99	E

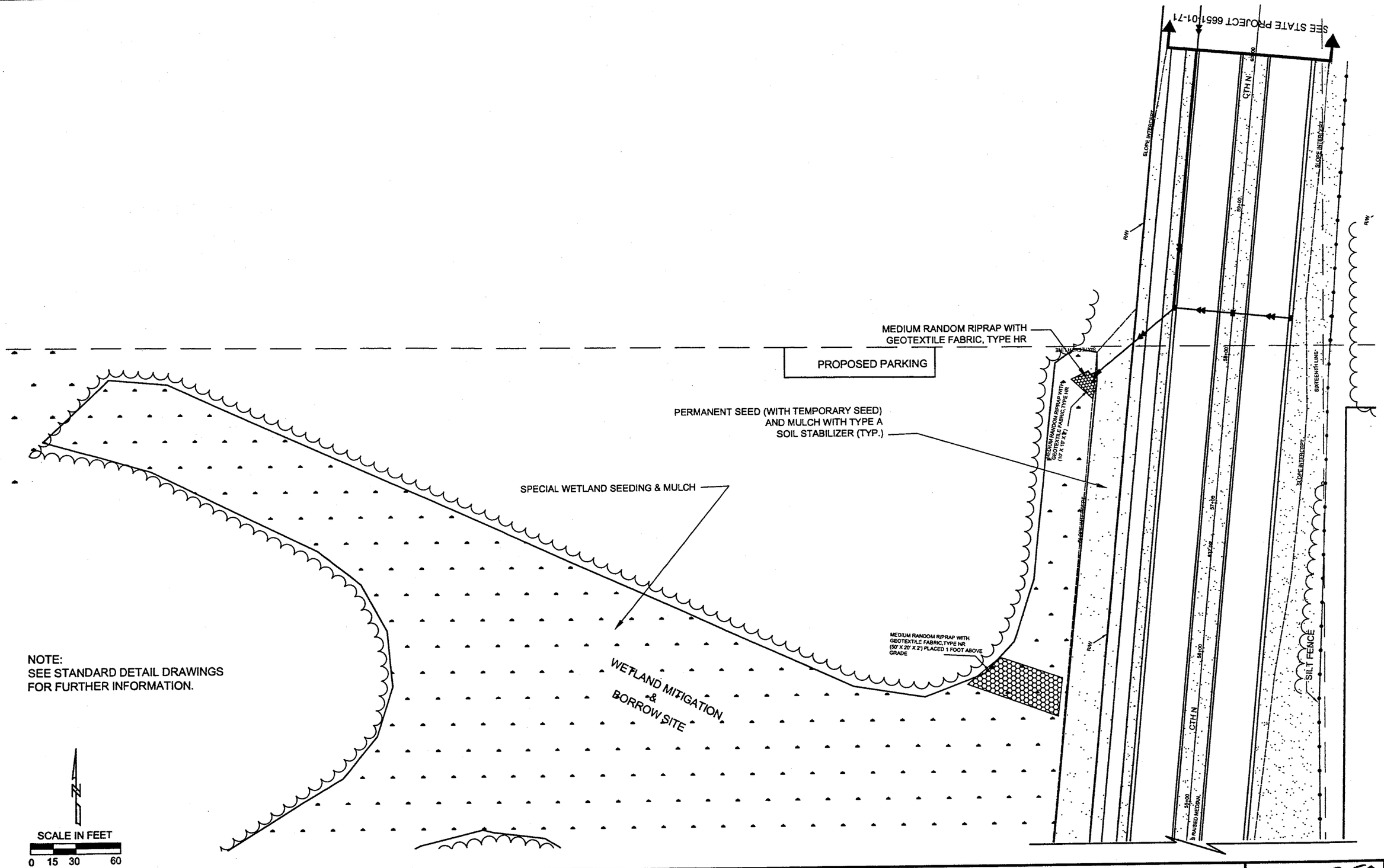

P:\draft\28940100 cth n west arterial\topo survey\CTH N topo.dwg, EROSION5, 2/26/2004 8:04:12 AM

STATE PROJECT NUMBER: 6651-01-00	HWY: CTH N	COUNTY: MARATHON	RESTORATION AND EROSION CONTROL PLAN	SHEET NO: 2.50	E

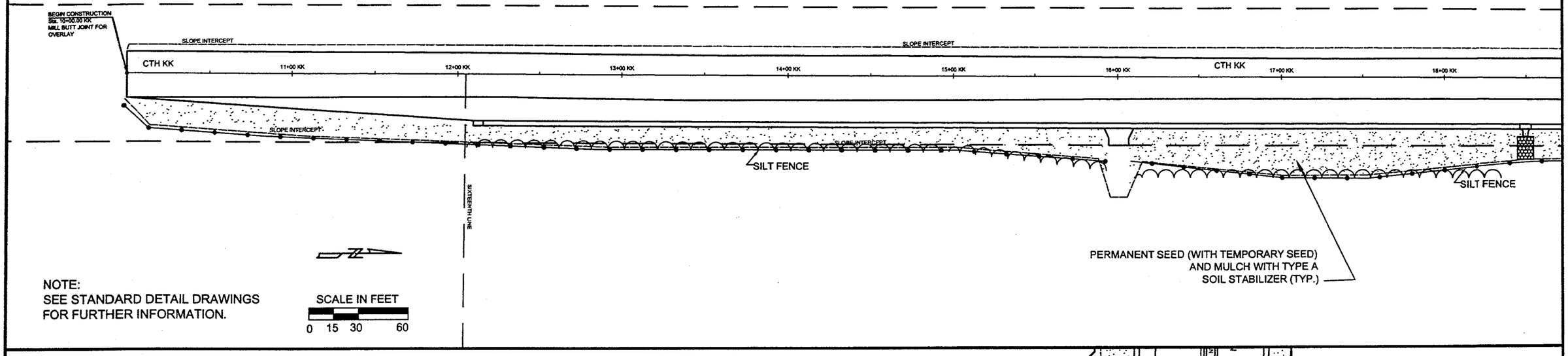

NOTE:
SEE STANDARD DETAIL DRAWINGS
FOR FURTHER INFORMATION.

SCALE IN FEET
0 15 30 60

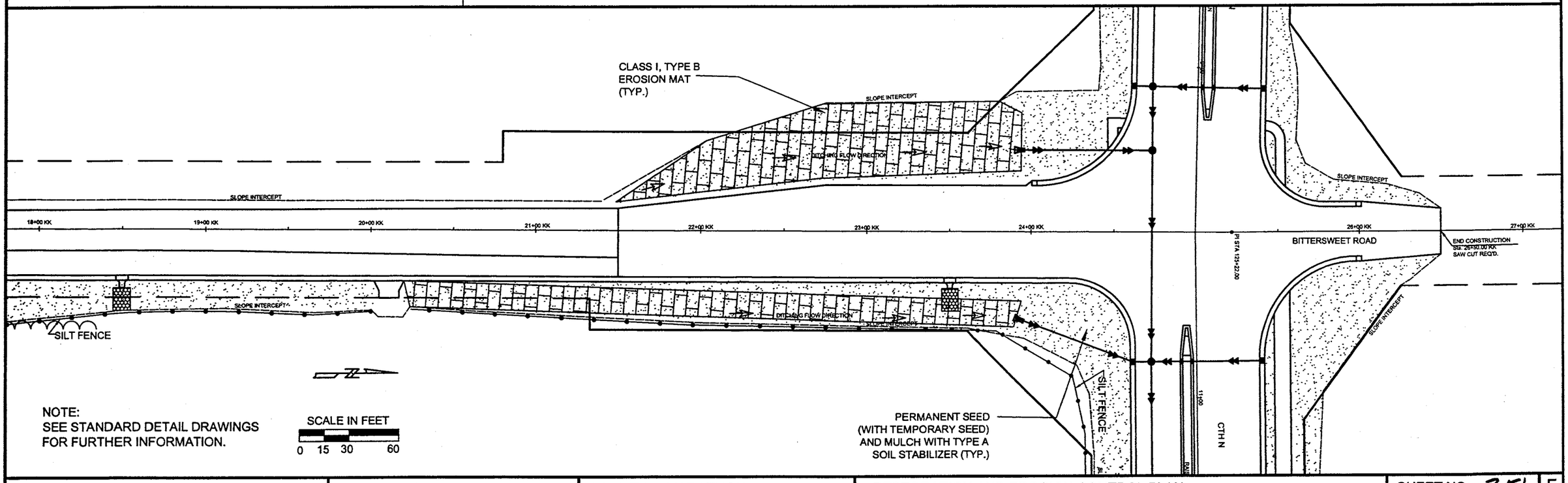

NOTE:
SEE STANDARD DETAIL DRAWINGS
FOR FURTHER INFORMATION.

SCALE IN FEET
0 15 30 60

STATE PROJECT NUMBER: 6651-01-00	HWY: CTH N	COUNTY: MARATHON	RESTORATION AND EROSION CONTROL PLAN	SHEET NO: 2.51	E

P:\dratt\28940100 cth n west arterial\topo survey\CTH N topo.dwg, EROSION6, 2/24/2004 1:06:41 PM

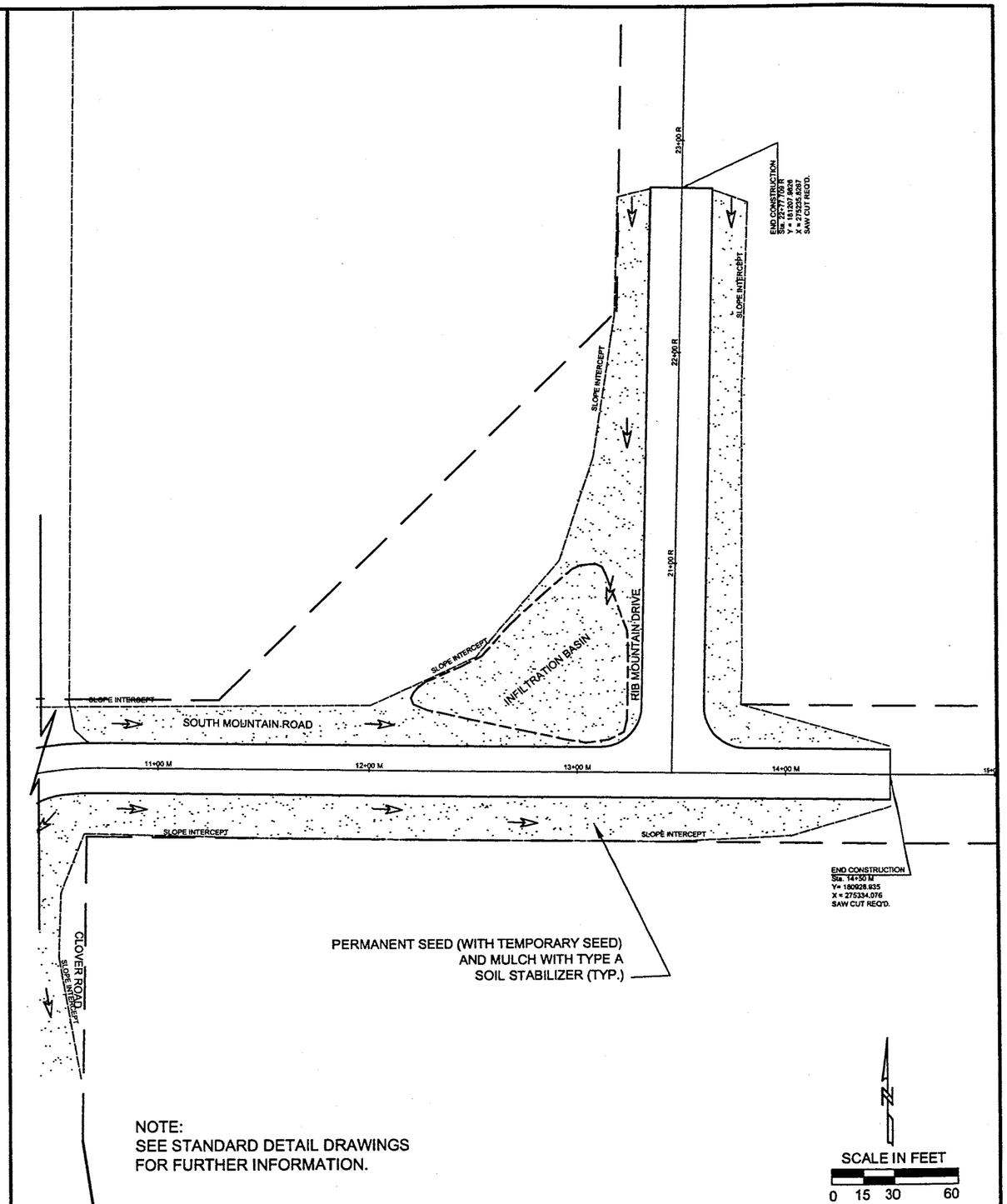

P:\draft\28940100 cth n west arterial\topo survey\CTH N topo.dwg, EROSION7, 2/20/2004 10:39:59 AM

STATE PROJECT NUMBER: 6651-01-00	HWY: CTH N	COUNTY: MARATHON	RESTORATION AND EROSION CONTROL PLAN	SHEET NO: 2.52	E

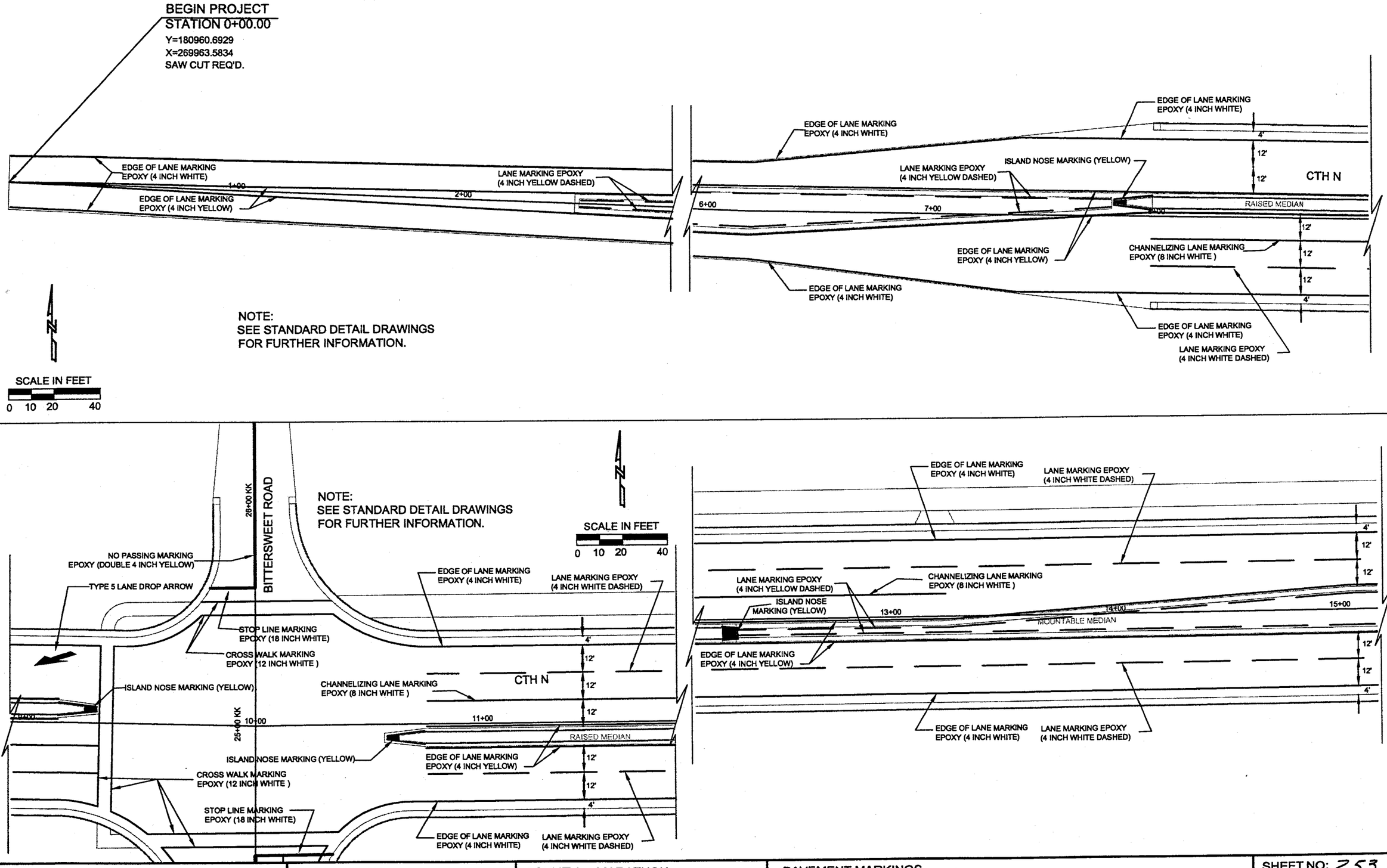

STATE PROJECT NUMBER: 6651-01-00	HWY: CTH N	COUNTY: MARATHON	PAVEMENT MARKINGS	SHEET NO: 2.53	E

P:\DRAFT\28840100 CTH N West Arterial\topo survey\CTH N topo.DWG, PAVTMARK, 10/07/2003 02:08:24 PM

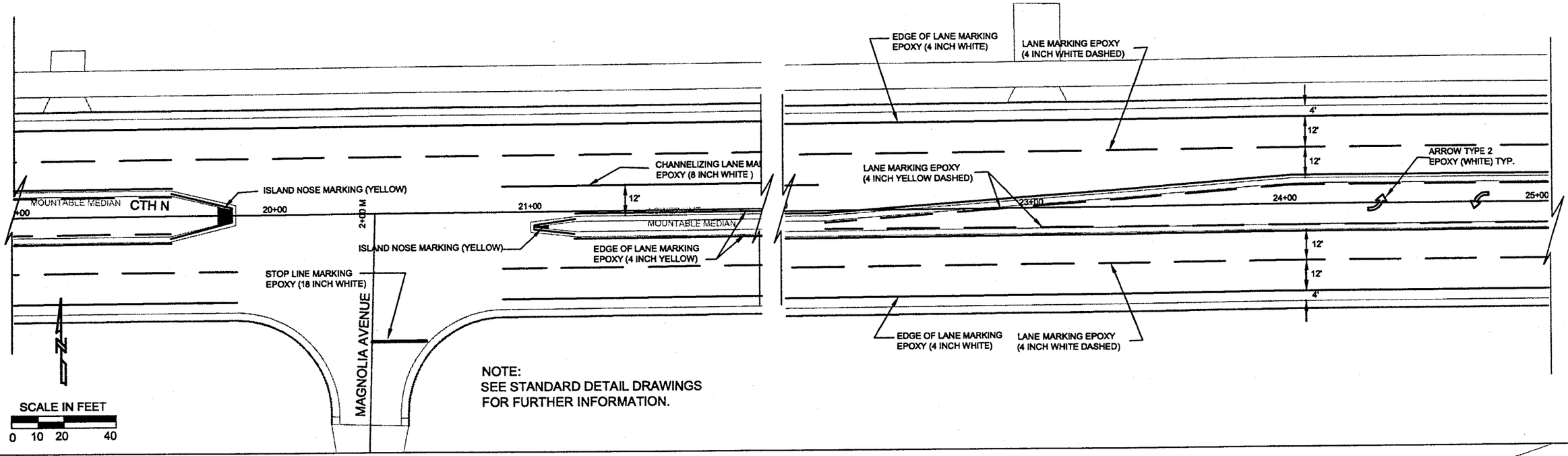

NOTE:
SEE STANDARD DETAIL DRAWINGS
FOR FURTHER INFORMATION.

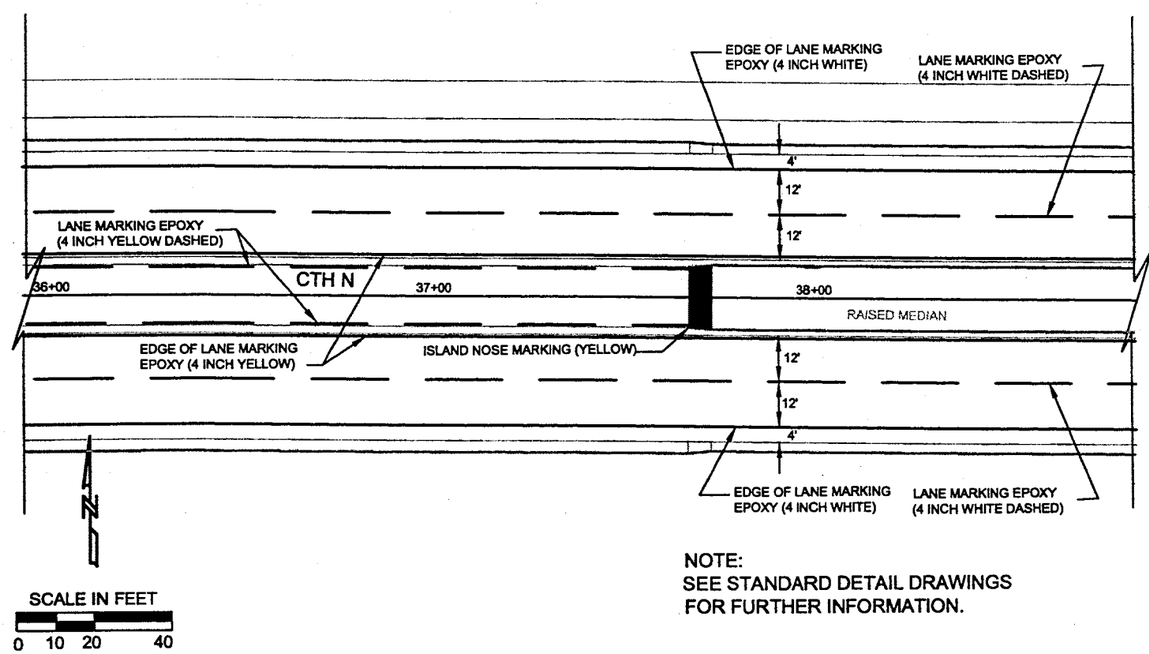

NOTE:
SEE STANDARD DETAIL DRAWINGS
FOR FURTHER INFORMATION.

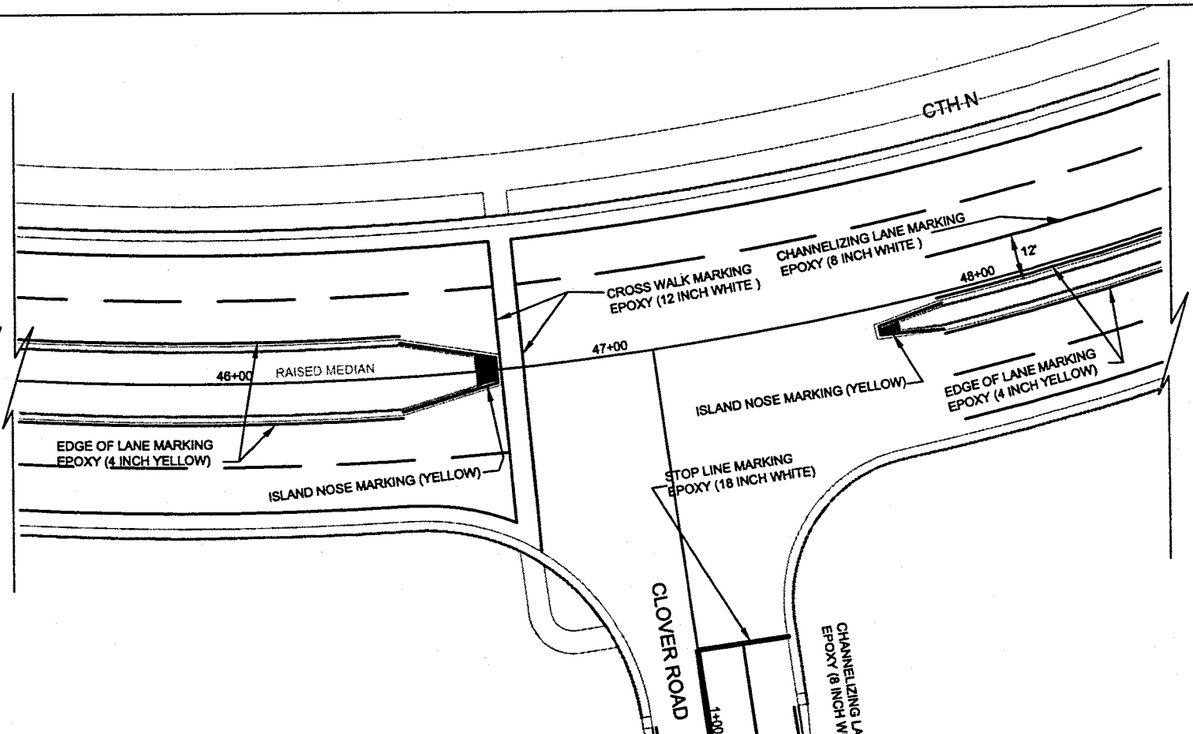

STATE PROJECT NUMBER: 6651-01-00	HWY: CTH N	COUNTY: MARATHON	PAVEMENT MARKINGS	SHEET NO: 2.54	E

P:\DRAFT\26940100 CTH N West Arterial\topo survey\CTH N topo.DWG, PAVTMARK2, 10/07/2003 02:04:32 PM

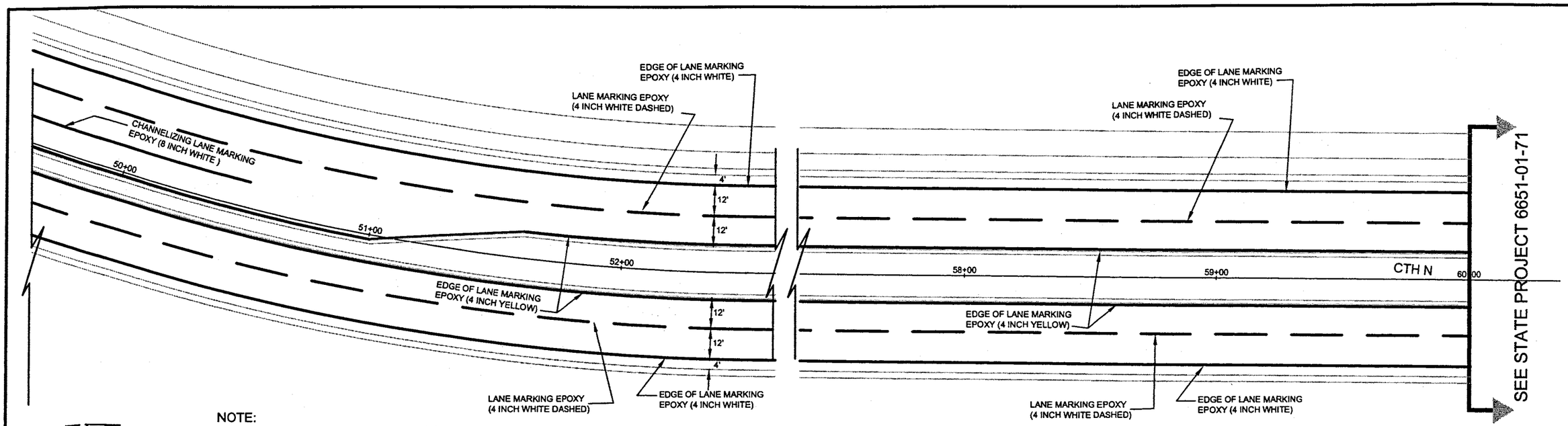

NOTE:
SEE STANDARD DETAIL DRAWINGS
FOR FURTHER INFORMATION.

SCALE IN FEET
0 10 20 40

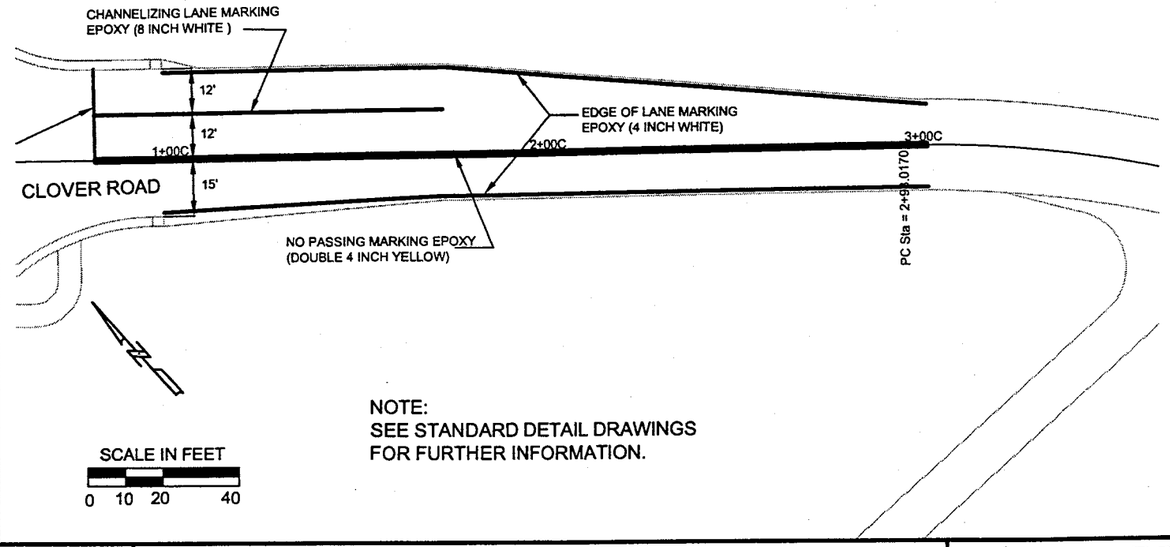

NOTE:
SEE STANDARD DETAIL DRAWINGS
FOR FURTHER INFORMATION.

SCALE IN FEET
0 10 20 40

STATE PROJECT NUMBER: 6651-01-00	HWY: CTH N	COUNTY: MARATHON	PAVEMENT MARKINGS	SHEET NO: 2.55	E

P:\draft\28940100 cth n west arterial\topo survey\CTH N topo.dwg, PAVTMARK3, 2/20/2004 11:34:47 AM

P:\DRAFT\28940100 CTH N West Arterial\topo survey\CTH N topo.dwg, PAVTMARK4, 02/27/2004 11:00:15 AM

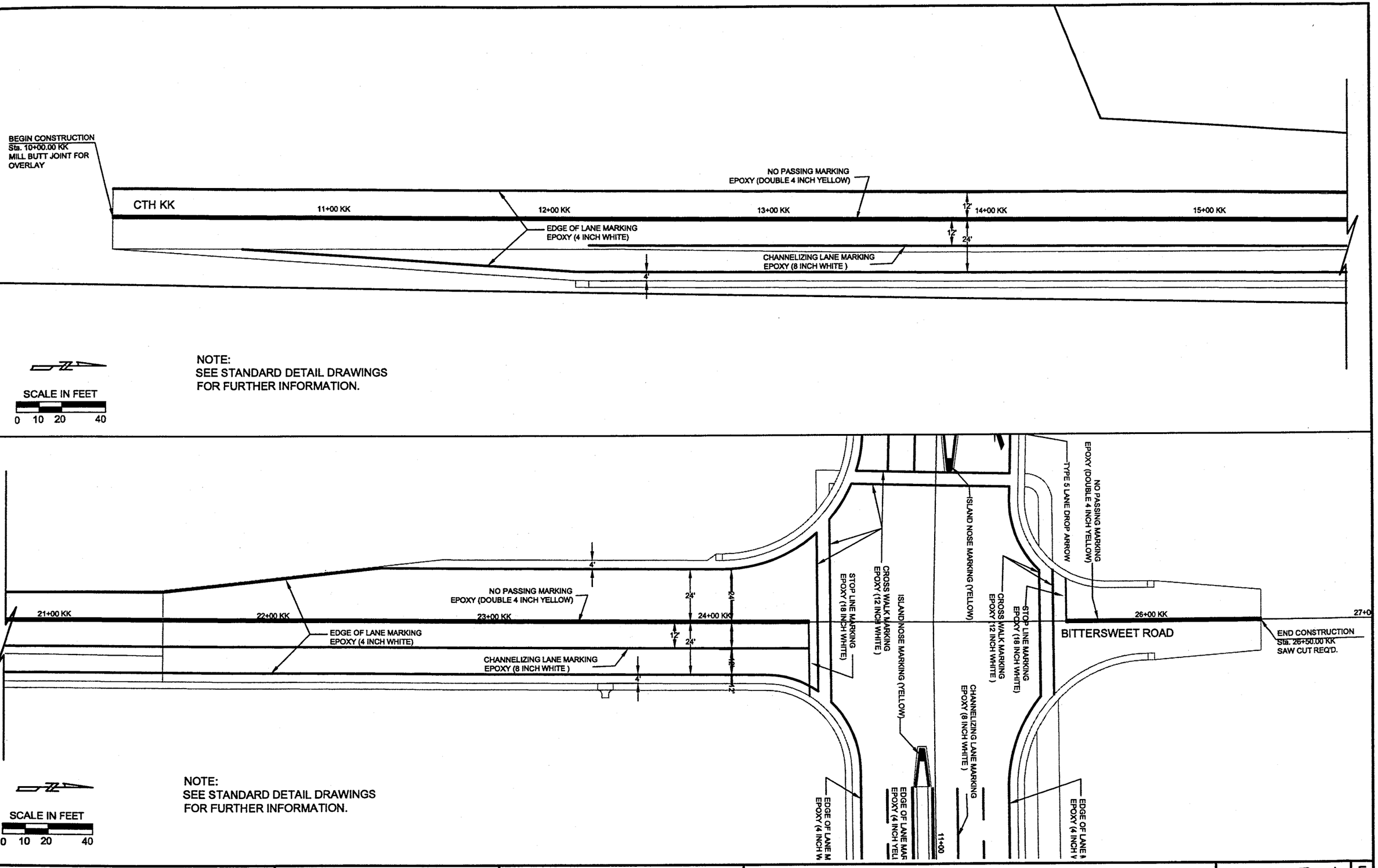

STATE PROJECT NUMBER: 6651-01-00	HWY: CTH N	COUNTY: MARATHON	PAVEMENT MARKINGS	SHEET NO: 2.56	E

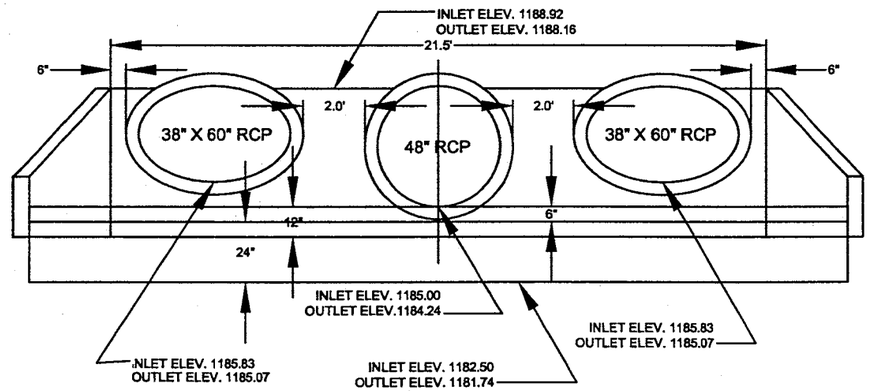

SECTION A-A

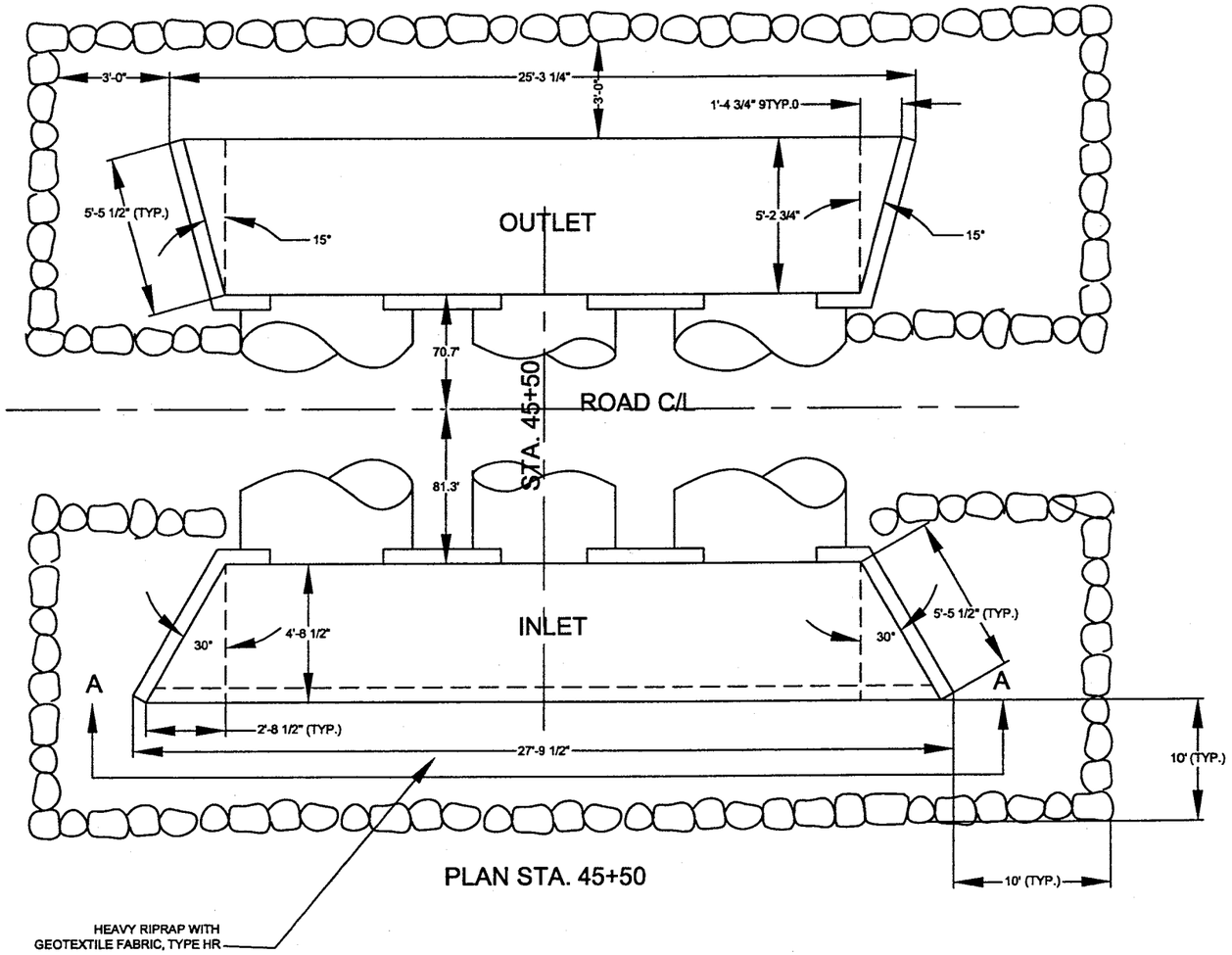

PLAN STA. 45+50

NOTE: SEE STANDARD DETAIL DRAWING
8F 10-1 FOR FURTHER INFORMATION.

INLET AND OUTLET ENDWALL DETAIL AT CULVERT CROSSING

STATE PROJECT NUMBER: 6651-01-00	HWY: CTH N	COUNTY: MARATHON	CULVERT DETAILS	SHEET NO: 257	E

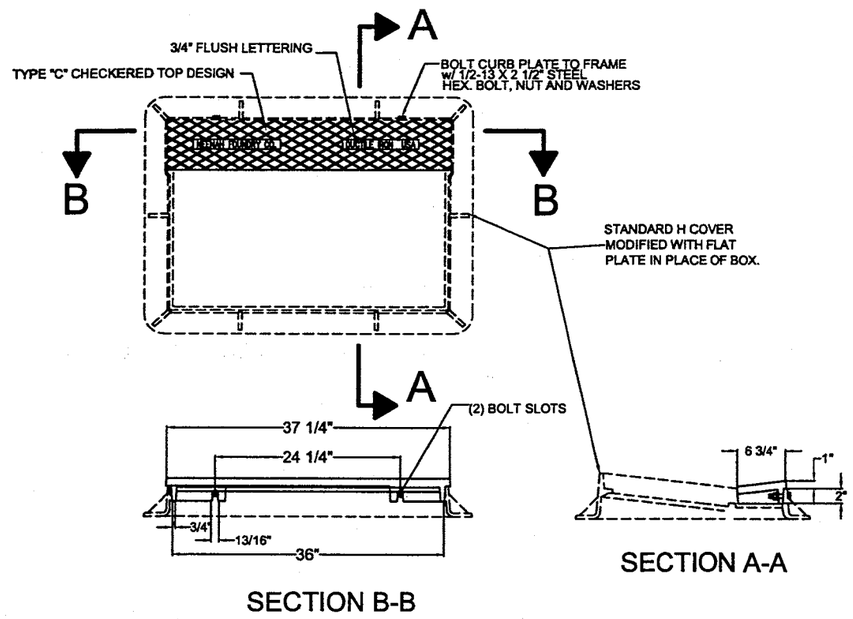

SECTION B-B

SECTION A-A

TYPE H COVER WITH CURB PLATE

NOT TO SCALE

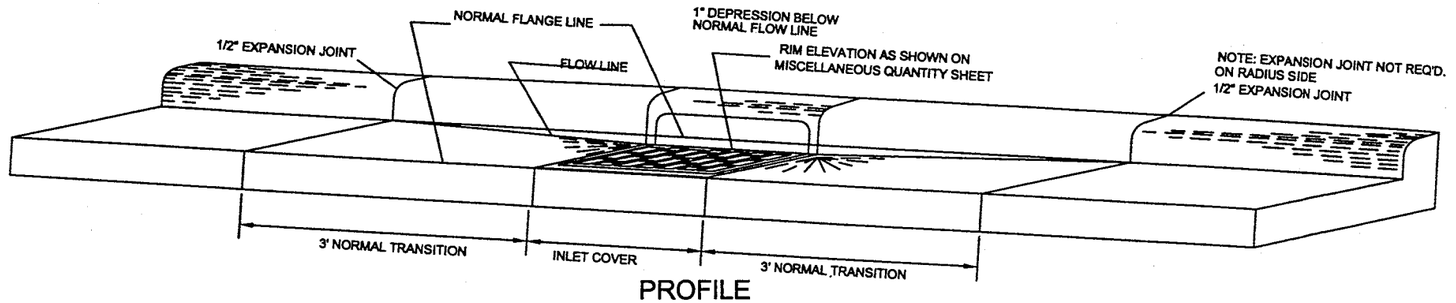

PROFILE

SECTION A-A

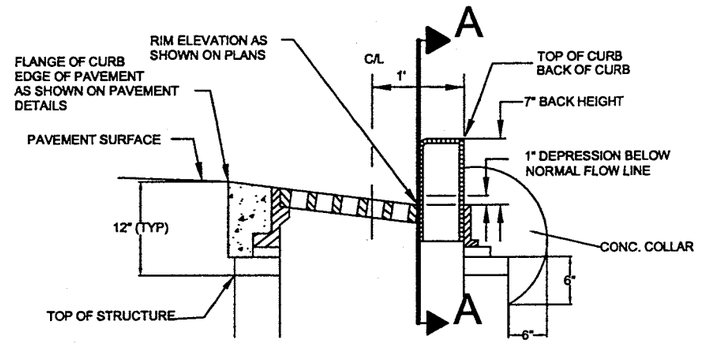

DEPRESSED GUTTER AT INLETS

NOT TO SCALE

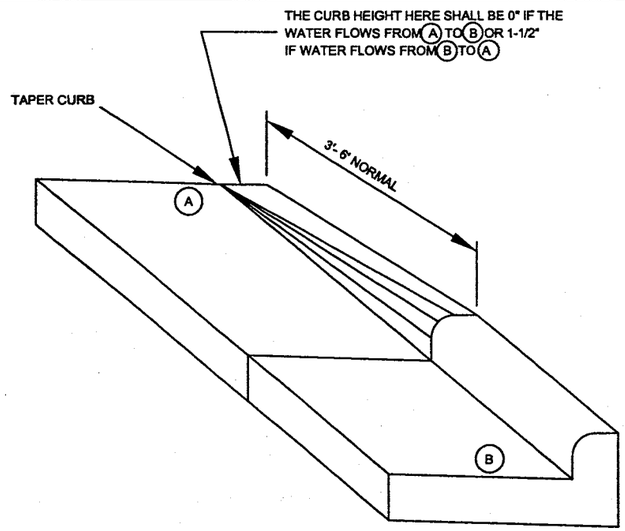

CURB TERMINI

NOT TO SCALE

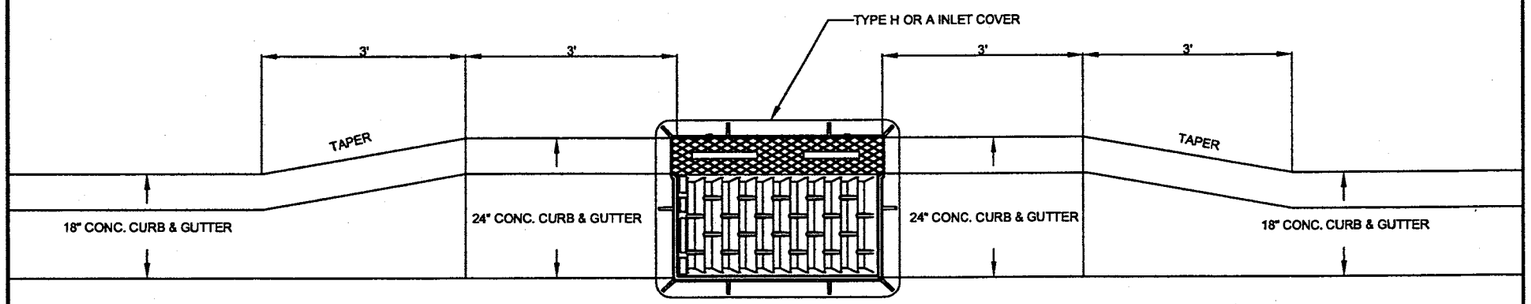

BACK OF CURB TAPER AT INLETS

NOT TO SCALE

STATE PROJECT NUMBER: 6651-01-00	HWY: CTH N	COUNTY: MARATHON	DETAILS	SHEET NO: 258	E

P:\DRAFT\28940101 CTH N KK TO LILYDETAILS.dwg, Layout1, 01/27/2003 11:56:22 AM

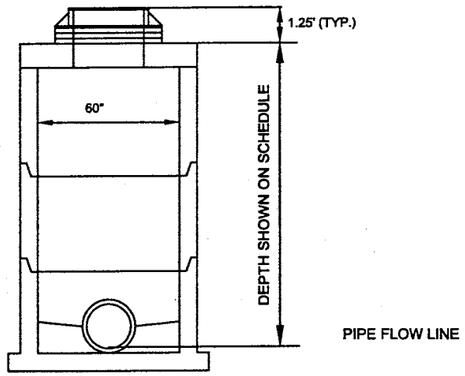

MANHOLES, TYPE 1 (MODIFIED)

NOT TO SCALE

NOTE:
ALL PERTINENT SPECIFICATIONS AS SHOWN
ON THE STANDARD DETAIL DRAWINGS APPLY,
EXCEPT DIMENSIONS SHOWN.

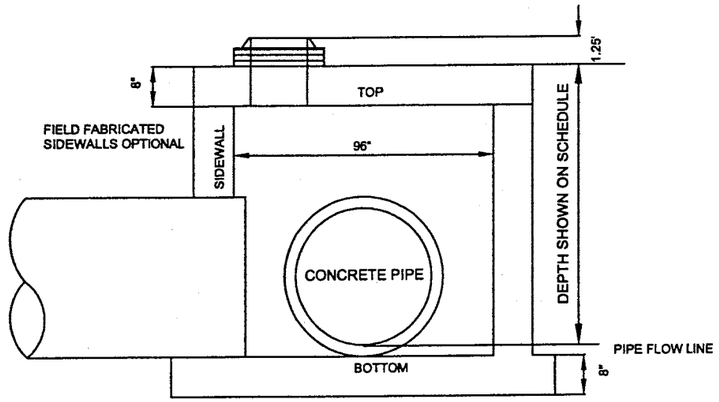

MANHOLES, TYPE 3 (MODIFIED)

NOT TO SCALE

NOTE:
ALL PERTINENT SPECIFICATIONS AS SHOWN
ON THE STANDARD DETAIL DRAWINGS APPLY,
EXCEPT DIMENSIONS SHOWN.
MANUFACTURED TOP AND BOTTOM SECTIONS

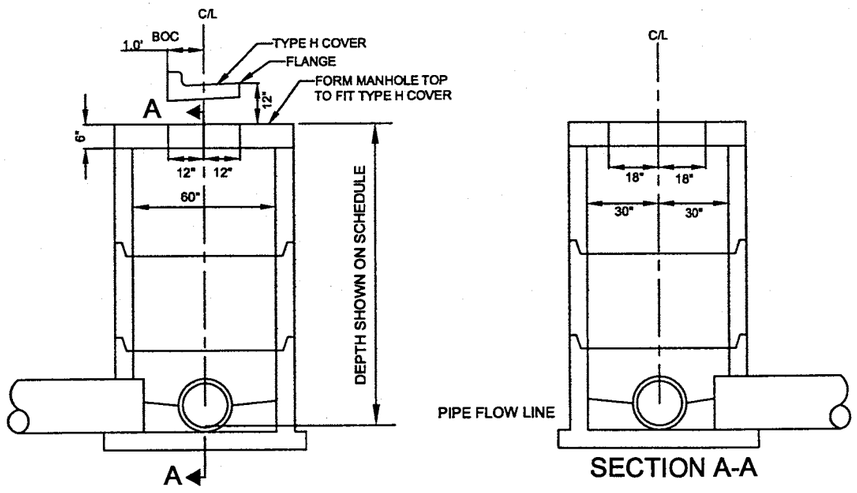

MANHOLES, TYPE 1 (MODIFIED)
(TO ACCOMODATE, TYPE H COVER)

NOT TO SCALE

NOTE:
ALL PERTINENT SPECIFICATIONS AS SHOWN
ON THE STANDARD DETAIL DRAWINGS APPLY,
EXCEPT DIMENSIONS SHOWN.

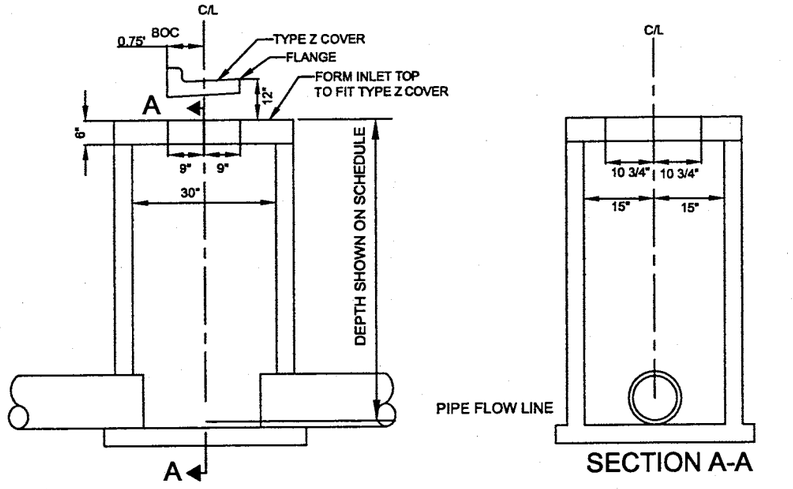

INLETS TYPE 1 (MODIFIED)
(TO ACCOMODATE, TYPE Z COVER)

NOT TO SCALE

NOTE:
ALL PERTINENT SPECIFICATIONS AS SHOWN
ON THE STANDARD DETAIL DRAWINGS APPLY,
EXCEPT DIMENSIONS SHOWN.

STATE PROJECT NUMBER: 6651-01-00	HWY: CTH N	COUNTY: MARATHON	DETAILS	SHEET NO: 2.59 E

P:\DRAFT\28940101 CTH N KK TO LILY\DETAILS.dwg, Layout2, 10/08/2003 11:35:34 AM

RURAL DRIVEWAY INTERSECTION DETAIL
(PE'S, FE'S & CE'S)

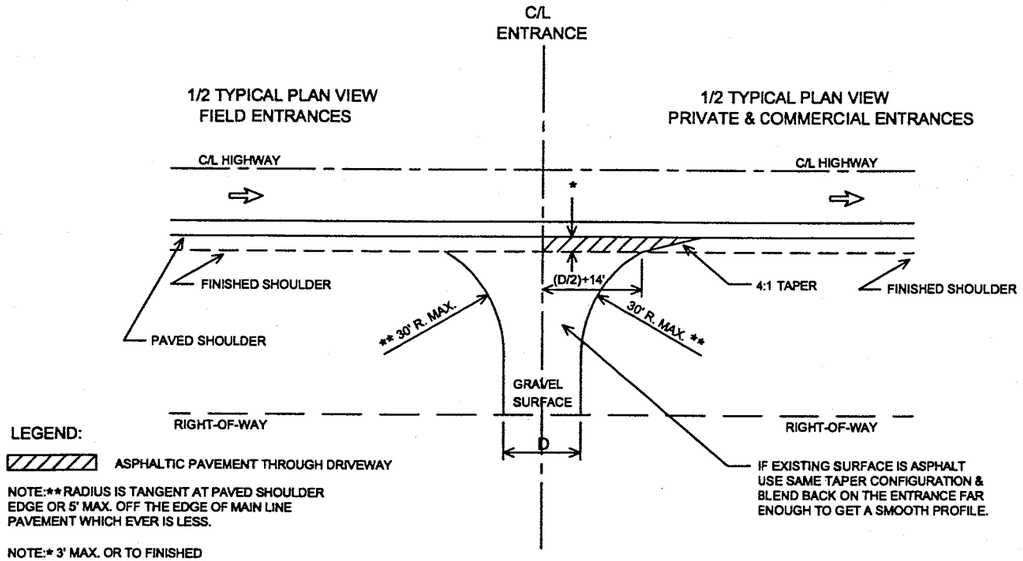

LEGEND:

ASPHALTIC PAVEMENT THROUGH DRIVEWAY

NOTE:** RADIUS IS TANGENT AT PAVED SHOULDER EDGE OR 5' MAX. OFF THE EDGE OF MAIN LINE PAVEMENT WHICH EVER IS LESS.

NOTE:* 3' MAX. OR TO FINISHED SHOULDER WHICH EVER IS LESS.

D = DRIVEWAY WIDTH
D = 20 TYP. (PE'S & FE'S) (16' MIN. - 24' MAX.)
D = 28 (CE'S & FARM ENT.) (24' MIN. - 35' MAX.)

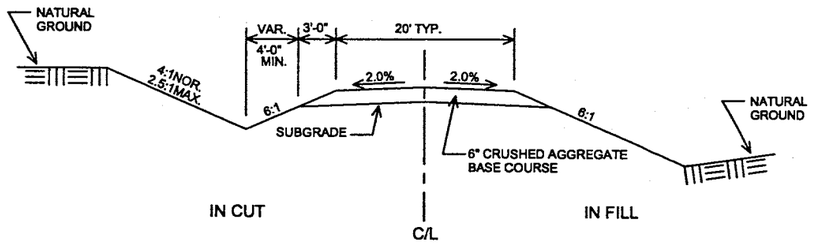

TYPICAL CROSS SECTION FOR PRIVATE DRIVE OR FIELD ENTRANCE

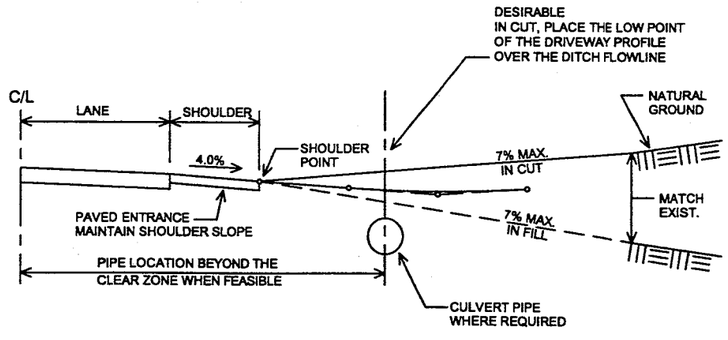

TYPICAL DRIVEWAY PROFILES

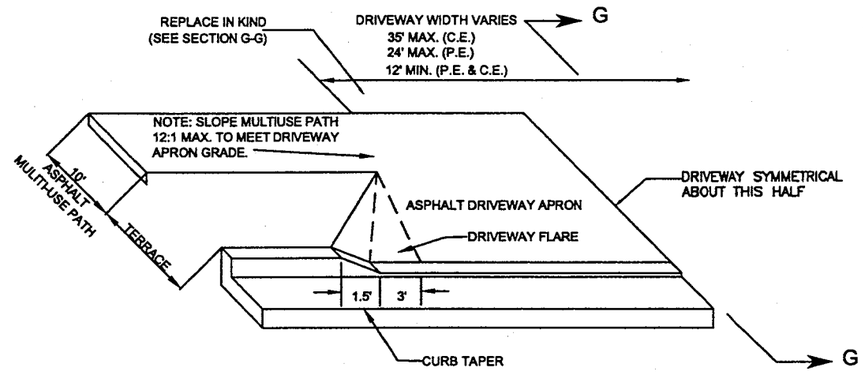

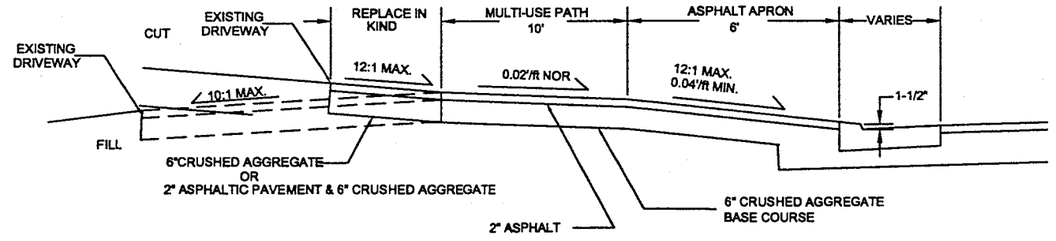

SECTION G-G

TYPICAL DRIVEWAY WITH MULTI-USE PATH

NOT TO SCALE

STATE PROJECT NUMBER: 6651-01-00	HWY: CTH N	COUNTY: MARATHON	DETAILS	SHEET NO: 2.60	E

PLOTTED: 10/06/2003 11:47:28 AM
P:\DRAFT\28940101\CTH N KK TO LILY\DETAILS.dwg, Layout3, 10/06/2003 11:47:28 AM

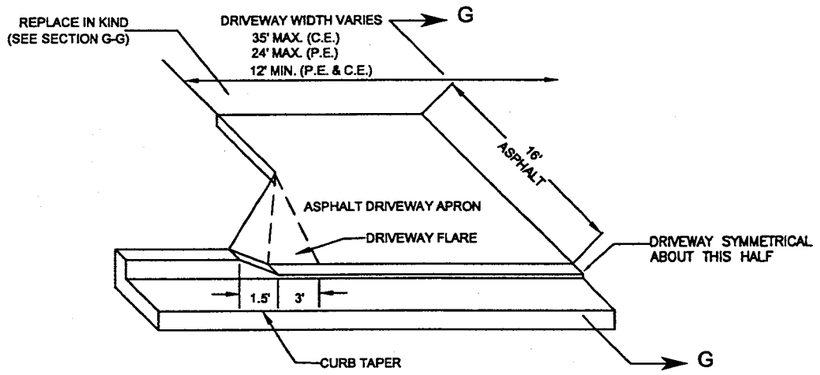

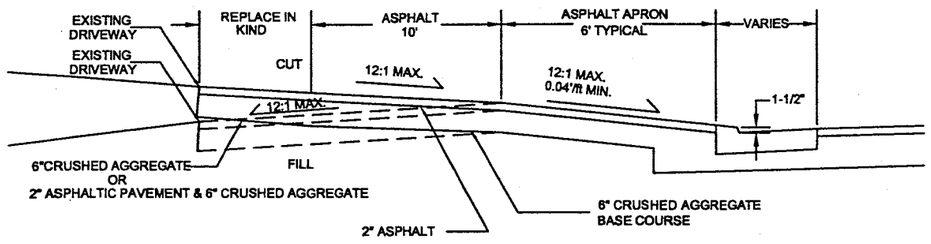

SECTION G-G

TYPICAL DRIVEWAY
WITHOUT MULTI-USE PATH

NOT TO SCALE

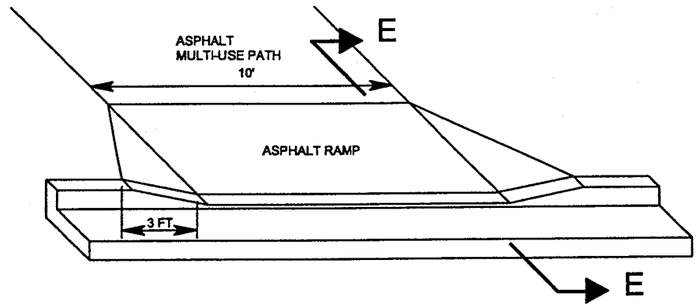

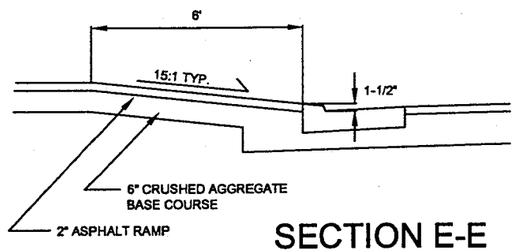

SECTION E-E

CURB RAMP
MULTI-USE PATH

NOT TO SCALE

NOTE: SEE STANDARD DETAIL DRAWING
8D 5-9a FOR FURTHER INFORMATION.

STATE PROJECT NUMBER: 6651-01-00	HWY: CTH N	COUNTY: MARATHON	DETAILS	SHEET NO: 2.61	E

P:\DRAFT\28940101 CTH N KK TO LILY\DETAILS.dwg, Layout4, 10/08/2003 11:54:43 AM

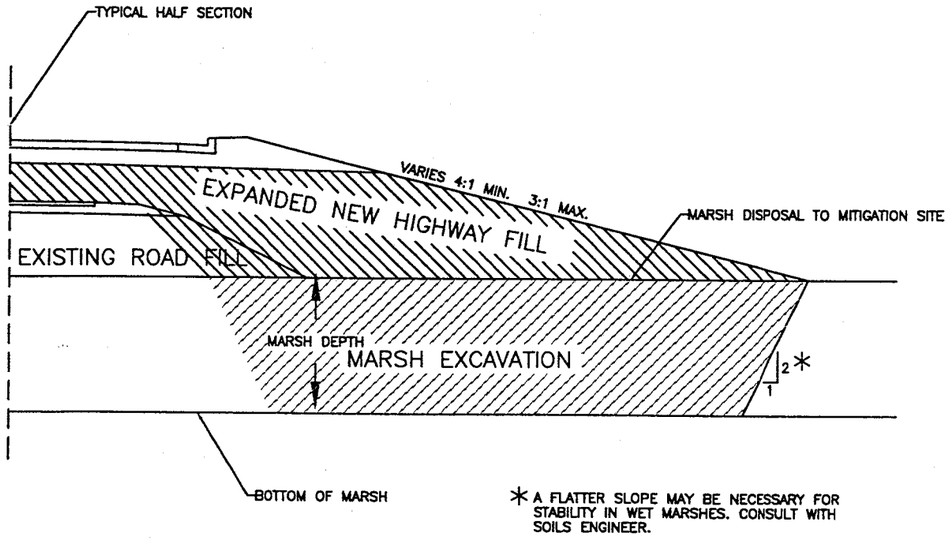

TYPICAL MARSH EXCAVATION

NOT TO SCALE

RUNOFF COEFFICENT TABLE

	HYDROLOGIC SOIL GROUP											
	A			B			C			D		
	SLOPE RANGE (PERCENT)			SLOPE RANGE (PERCENT)			SLOPE RANGE (PERCENT)			SLOPE RANGE (PERCENT)		
LAND USE :	0-2	2-6	6 & OVER	0-2	2-6	6 & OVER	0-2	2-6	6 & OVER	0-2	2-6	6 & OVER
ROW CROPS	.08 .22	.16 .30	.22 .38	.12 .26	.20 .34	.27 .44	.15 .30	.24 .37	.33 .50	.19 .34	.28 .41	.38 .56
MEDIAN STRIP-TURF	.19 .24	.20 .26	.24 .30	.19 .25	.22 .28	.26 .33	.20 .26	.25 .30	.30 .37	.20 .27	.25 .32	.30 .38
SIDE SLOPE-TURF			.25 .32			.27 .34			.28 .36			.30 .38
PAVEMENT :												
ASPHALT	.70 - .95											
CONCRETE	.80 - .95											
BRICK	.70 - .80											
DRIVES, WALKS	.75 - .85											
ROOFS	.75 - .95											
GRAVEL ROADS, SHOULDERS	.70 - .60											

TOTAL PROJECT AREA = ACRES

TOTAL AREA EXPECTED TO BE DISTURBED BY CONSTRUCTION ACTIVITIES = ACRES

P:\DRAFT\28940101 CTH N KK TO LILY\DETAILS.dwg, Layout6, 10/07/2003 04:55:51 PM

ENDWALL SIZE	BAR DIAMETER	BOLT DIAMETER
12"	3/4"	5/8"
15"	3/4"	5/8"
18"	3/4"	5/8"
21"	3/4"	3/4"
24"	1"	3/4"
27"	1"	3/4"
30"	1"	3/4"
36"	1"	3/4"
42"	1 1/4"	3/4"
48"	1 1/4"	1"
54"	1 1/4"	1"
60"	1 1/4"	1"
72"	1 1/4"	1"

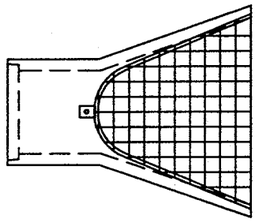

NOTES :
6" SPACING MIN.

CONNECTOR PLATE W/ BOLT ATTACHED AT THREE POINTS TO ENDWALL

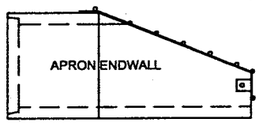

APRON ENDWALL TRASH GUARD

NOT TO SCALE

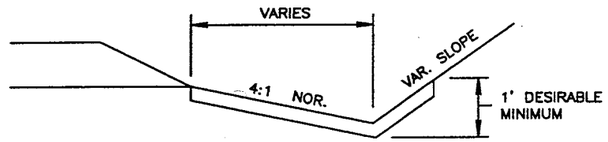

EROSION MAT DETAIL FOR DITCHES

NOT TO SCALE

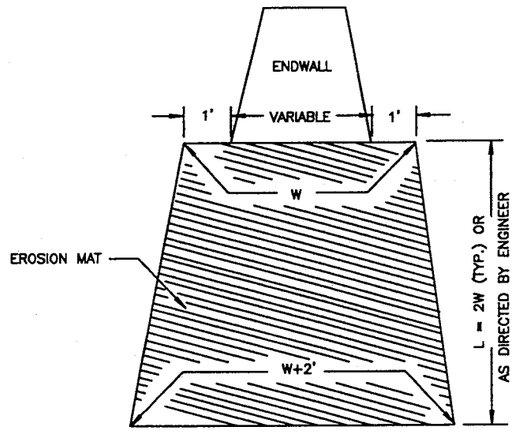

EROSION MAT TREATMENT AT CULVERTS

NOT TO SCALE

P:\DRAFT\28940101 CTH N KK TO LILY\DETAILS.dwg, Layout7, 10/08/2003 11:58:08 AM

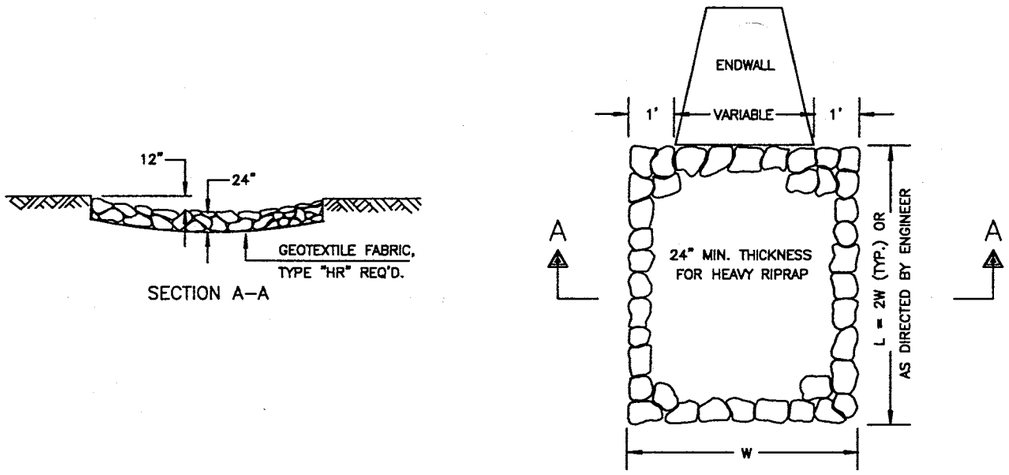

HEAVY RIPRAP TREATMENT AT CULVERTS

NOT TO SCALE

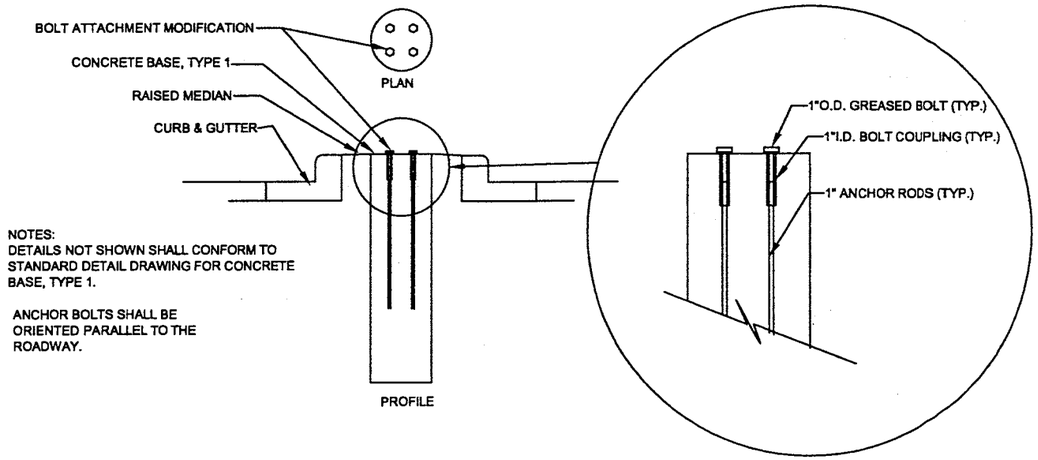

NOTES:
DETAILS NOT SHOWN SHALL CONFORM TO STANDARD DETAIL DRAWING FOR CONCRETE BASE, TYPE 1.

ANCHOR BOLTS SHALL BE ORIENTED PARALLEL TO THE ROADWAY.

CONCRETE BASE, TYPE 1, MODIFIED

NOT TO SCALE

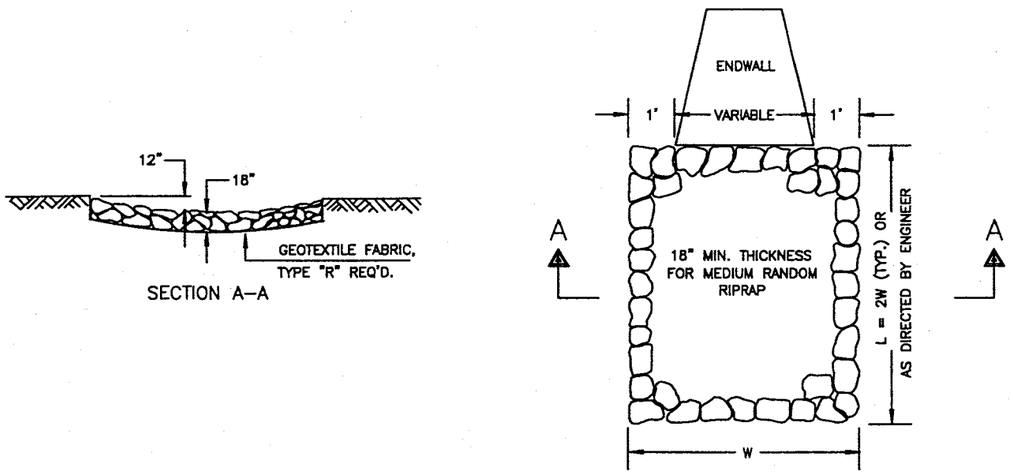

MEDIUM RANDOM RIPRAP TREATMENT AT CULVERTS

NOT TO SCALE

NOTES:
DETAILS NOT SHOWN SHALL CONFORM TO STANDARD DETAIL DRAWING FOR CONCRETE CURB & GUTTER, TYPE D.

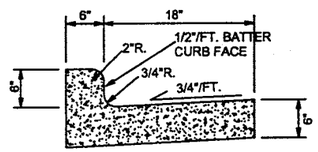

CONCRETE CURB & GUTTER, 24-INCH

NOT TO SCALE

STATE PROJECT NUMBER: 6651-01-00	HWY: CTH N	COUNTY: MARATHON	DETAILS	SHEET NO: 2.64	E

P:\DRAFT\28940101 CTH N KK TO LILY\DETAILS.dwg, Layout9, 01/27/2003 08:29:07 AM

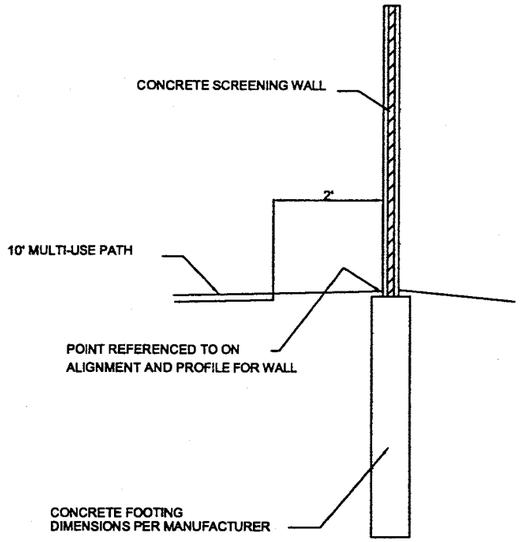

SIDE VIEW

SOIL PARAMETERS

UNIT WEIGHT	115 LBS/CF
FRICTION ANGLE	30 DEGREES
COHESION	N/A LBS/SF

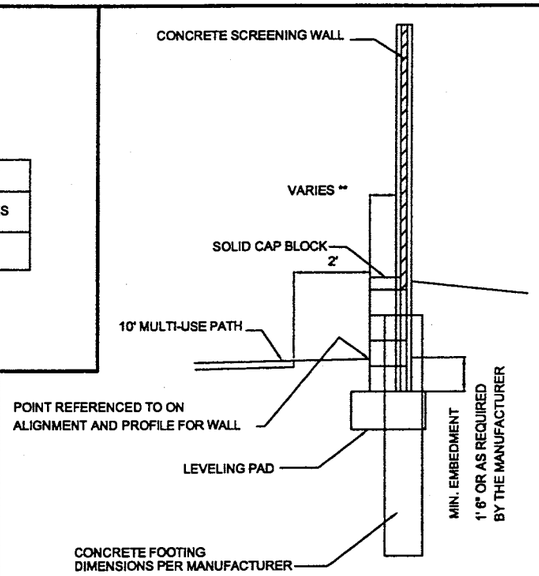

SIDE VIEW

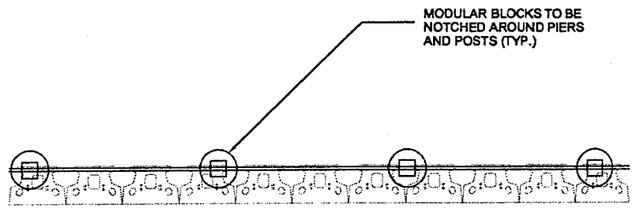

TOP VIEW

NOTE:

** DISTANCE BASED UPON MODULAR BLOCK DIMENSIONS

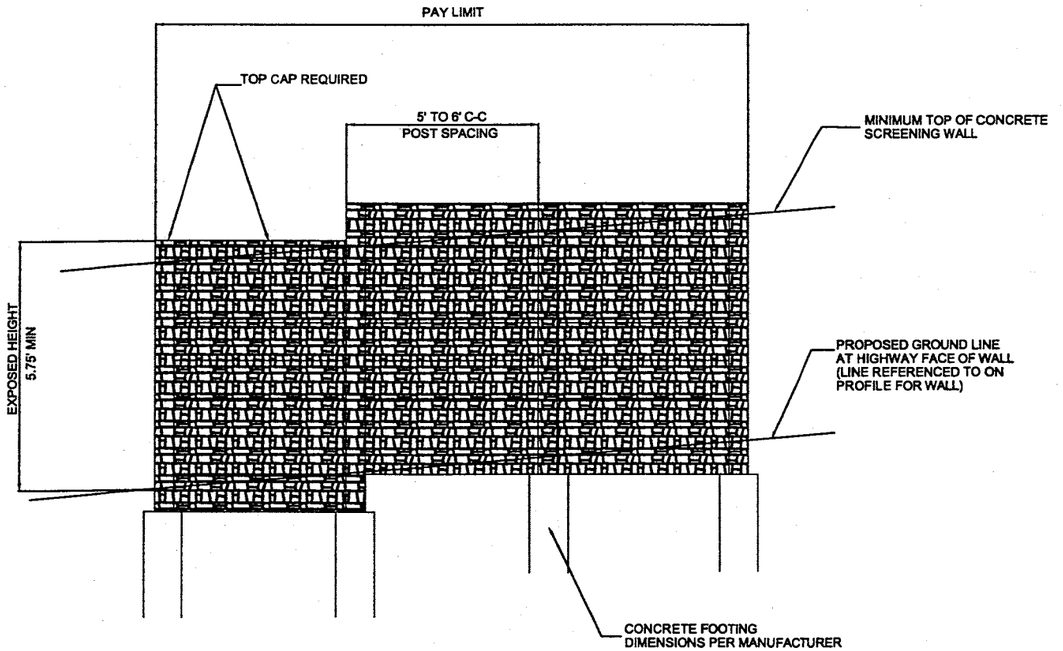

CONCRETE SCREENING WALL 6-FT

WITHOUT MODULAR BLOCK GRAVITY WALL
(LOOKING AT HWY FACE OF WALL)

WEST ARTERIAL FRONTAGE ROAD

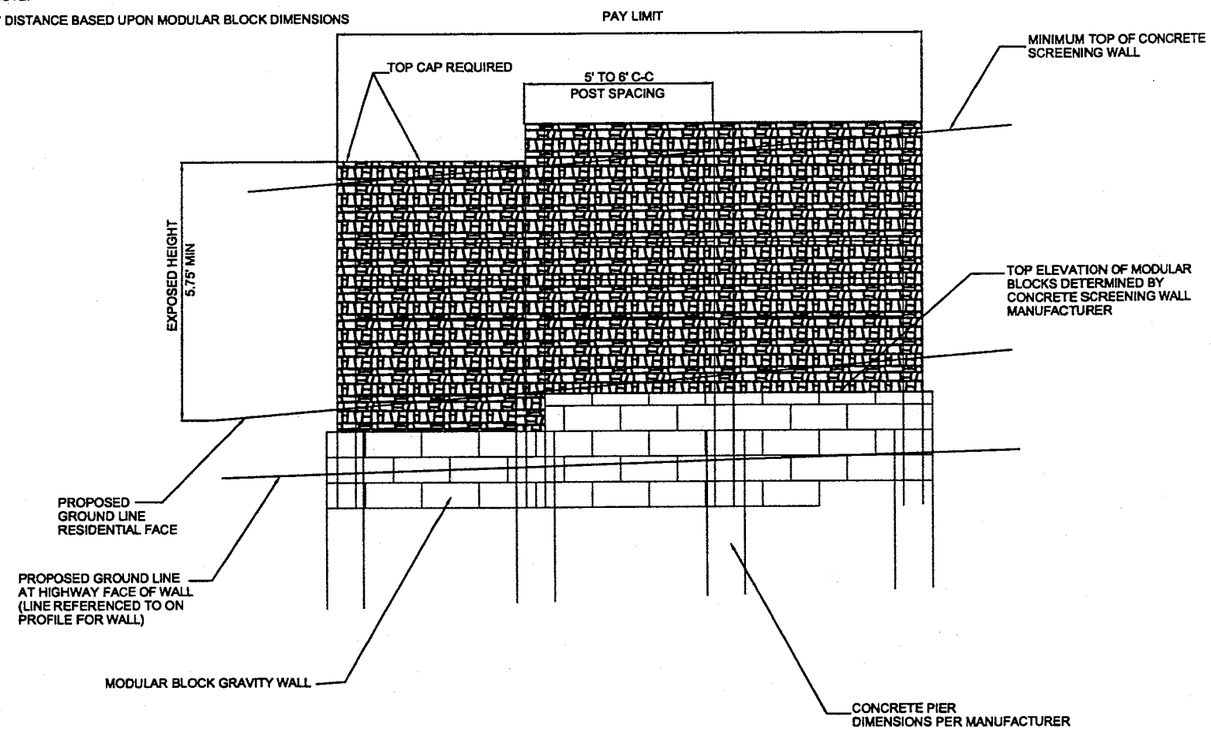

CONCRETE SCREENING WALL 6-FT

WITH MODULAR BLOCK GRAVITY WALL
(LOOKING AT HWY FACE OF WALL)

STATE PROJECT NUMBER: 6651-01-00	HWY: CTH N	COUNTY: MARATHON	DETAILS	SHEET NO: 2.65	E

P:\DRAFT\28940101 CTH N KK TO LILY\DETAILS.dwg, Layout10, 10/08/2003 01:58:35 PM

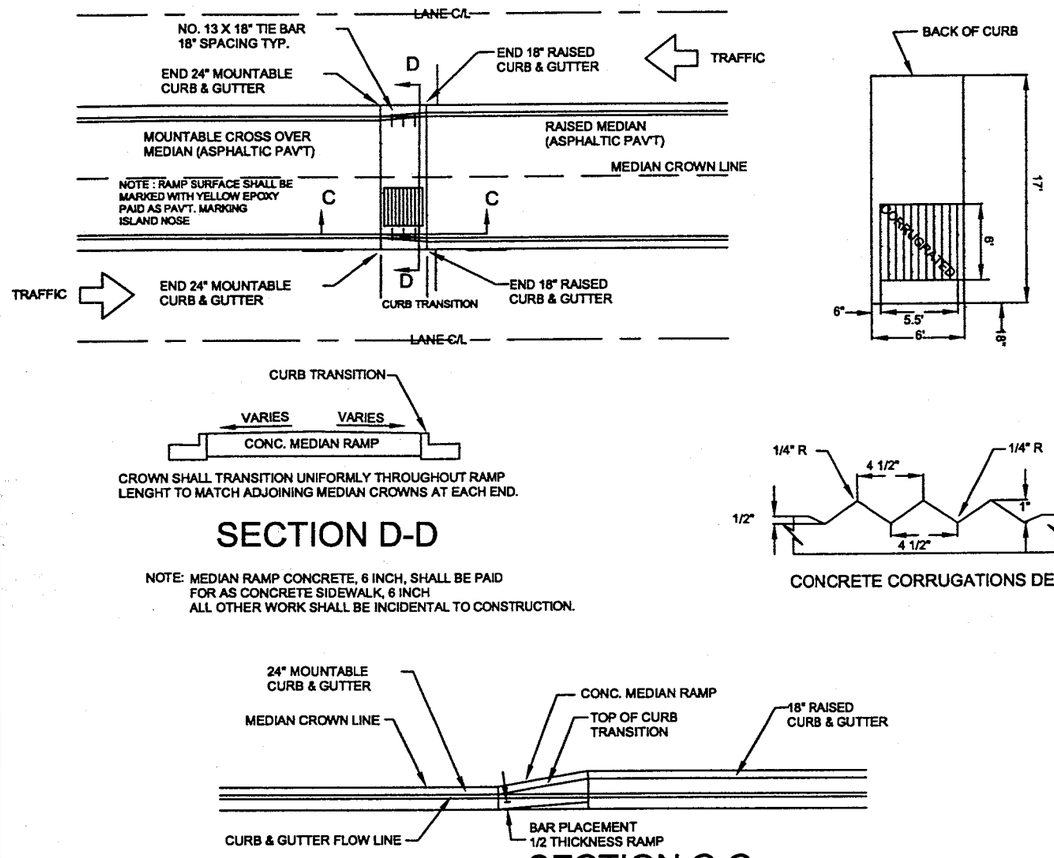

SECTION D-D

NOTE: MEDIAN RAMP CONCRETE, 6 INCH, SHALL BE PAID
FOR AS CONCRETE SIDEWALK, 6 INCH
ALL OTHER WORK SHALL BE INCIDENTAL TO CONSTRUCTION.

CONCRETE CORRUGATIONS DETAIL

SECTION C-C

CORRUGATED MEDIAN RAMP

NOT TO SCALE

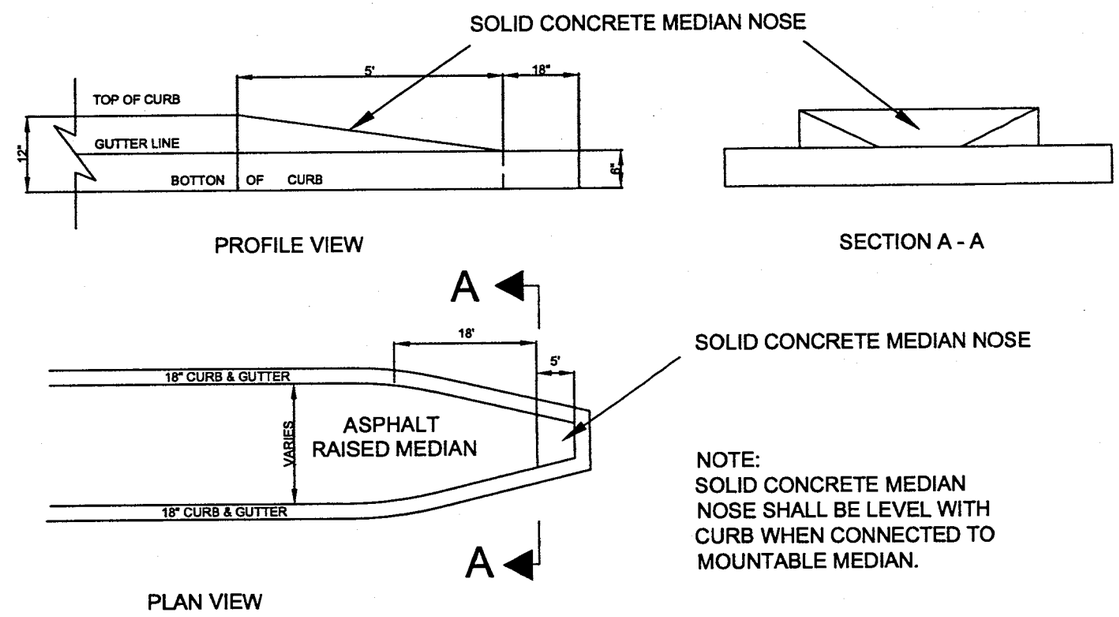

PROFILE VIEW

SECTION A - A

PLAN VIEW

NOTE:
SOLID CONCRETE MEDIAN
NOSE SHALL BE LEVEL WITH
CURB WHEN CONNECTED TO
MOUNTABLE MEDIAN.

MEDIAN SLOPED NOSE

NOT TO SCALE

STATE PROJECT NUMBER: 6651-01-00	HWY: CTH N	COUNTY: MARATHON	DETAILS	SHEET NO: 2.66	E

P:\DRAFT\28940101 CTH N KK TO LIET\DETAILS.dwg, Layout3, 10/07/2003 02:22:40 PM

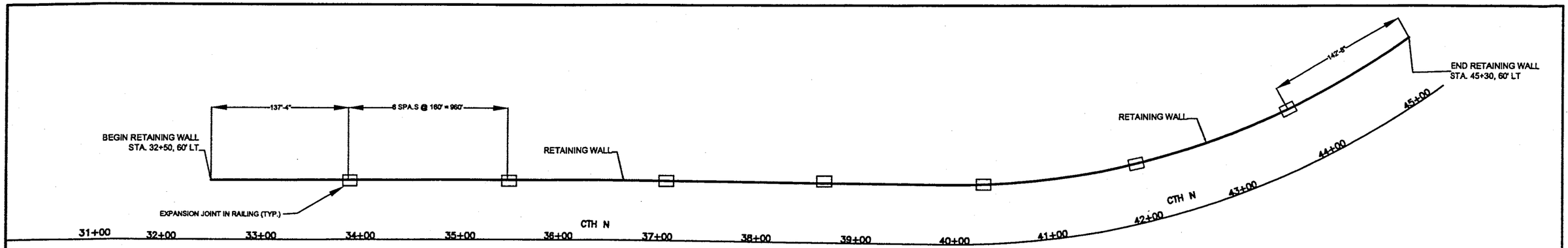

PLAN

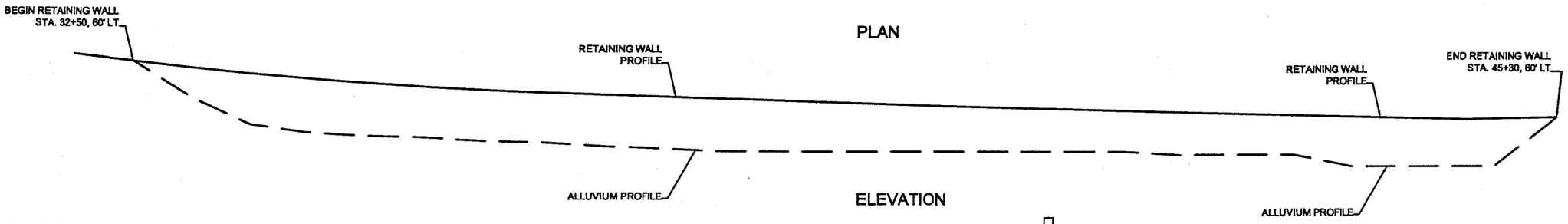

ELEVATION

RETAINING WALL TABLE

STATION	TOP OF WALL ELEVATION	TOP OF ALLUVIUM	EXPOSED WALL* HEIGHT (FT)	MIN. EMBEDMENT	MIN. REQ'D. SECT. MOD.(IN3/FT)	LENGTH FT.	HEIGHT FT.	AREA S.F.
32+50	1201.92	1201.9	0	10	6.5	0	17.4	0
33+00	1200.81	1195	5.81	11.62	6.5	50	17.4	871.5
33+50	1199.81	1191	8.81	17.62	6.5	50	26.4	1,321.5
34+00	1198.94	1189.5	9.44	18.88	6.5	50	28.3	1,416.0
34+50	1198.18	1189	9.18	18.36	6.5	50	27.5	1,377.0
35+00	1197.55	1188.8	8.75	17.5	6.5	50	26.3	1,312.5
35+50	1197.04	1188.2	8.84	17.68	6.5	50	26.5	1,326.0
36+00	1196.65	1187.8	8.85	17.7	6.5	50	26.6	1,327.5
36+50	1196.32	1187.4	8.92	17.84	6.5	50	26.8	1,338.0
37+00	1195.99	1187	8.99	17.98	6.5	50	27.0	1,348.5
37+50	1195.66	1186.5	9.16	18.32	6.5	50	27.5	1,374.0
38+00	1195.37	1186.5	8.87	17.74	6.5	50	26.6	1,330.5
38+50	1195.04	1186.5	8.54	17.08	6.5	50	25.6	1,281.0
39+00	1194.69	1186.5	8.19	16.38	6.5	50	24.6	1,228.5
39+50	1194.38	1186.5	7.88	15.76	6.5	50	23.6	1,182.0
40+00	1194.13	1186.5	7.63	15.26	6.5	50	22.9	1,144.5
40+50	1193.88	1186.5	7.38	14.76	6.5	46.5	22.1	1,029.5
41+00	1193.63	1186.5	7.13	14.26	6.5	46.5	21.4	994.6
41+50	1193.38	1186.5	6.88	13.76	6.5	46.5	20.6	959.8
42+00	1193.13	1186.5	6.63	13.26	6.5	46.5	19.9	924.9
42+50	1192.88	1186	6.88	13.76	6.5	46.5	20.6	959.8
43+00	1192.63	1184	8.63	17.26	6.5	46.5	25.9	1,203.9
43+50	1192.38	1184	8.38	16.76	6.5	46.5	25.1	1,169.0
44+00	1192.19	1184	8.19	16.38	6.5	46.5	24.6	1,142.5
44+50	1192.38	1184	8.38	16.76	6.5	46.5	25.1	1,169.0
45+00	1192.63	1184	8.63	17.26	6.5	46.5	25.9	1,203.9
45+30	1192.78	1192.78	0	10	6.5	27.6	25.9	714.8
					TOTALS	1243		30,651

* FOR EXPOSED WALL HEIGHTS BETWEEN VALVES
GIVEN IN THE TABLE, USE THE GREATER EMBEDMENT.

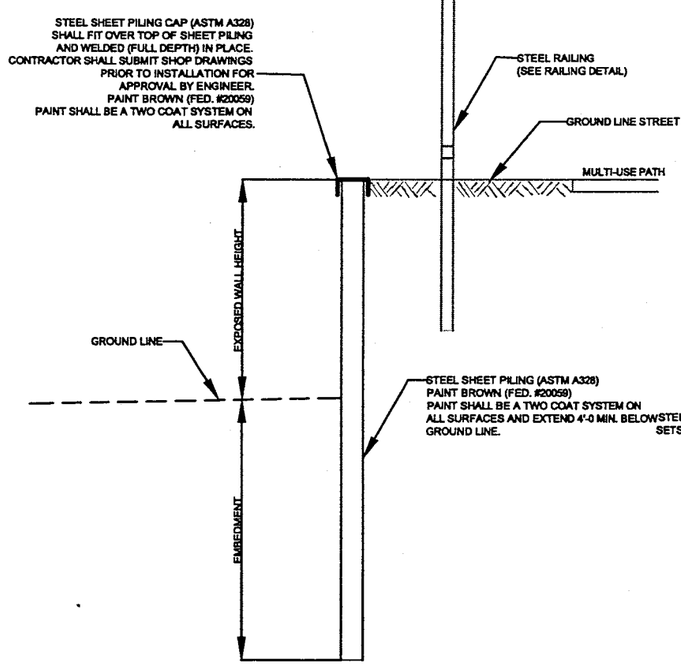

SECTION THRU WALL

ESTIMATE OF QUANTITIES

PERMANENT STEEL SHEET PILING, DELIVERED _____ 30,651 S.F.
PERMANENT STEEL SHEET PILING, INSTALLED _____ 30,651 S.F.

STEEL SHEET PILE CAP, INSTALLED _____ 1,243 L.F.

STEEL TUBEULAR RAILING _____ 1,240 L.F.

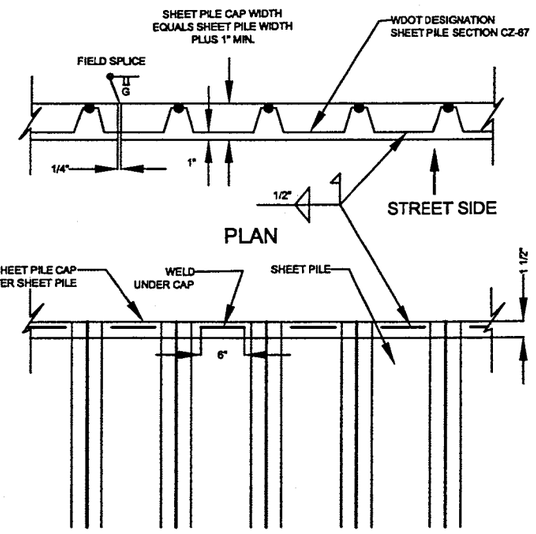

PART ELEVATION OF SHEET PILE

STATE PROJECT NUMBER: 6651-01-00	HWY: CTH N	COUNTY: MARATHON	DETAILS, SHEET PILE WALL	SHEET NO: 2.67	E

P:\DRAFT\26940101 CTH N KK TO LILY\DETAILS.dwg, Layout12, 12/04/2003 11:08:58 AM

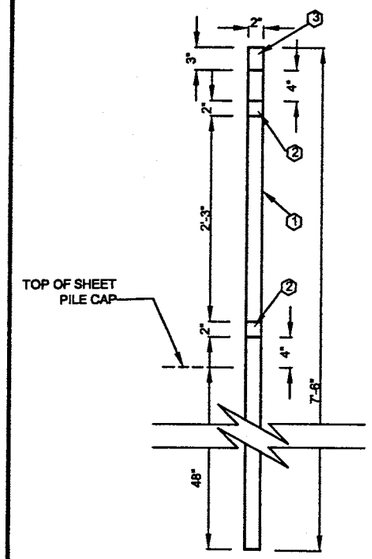

SECTION A-A
THROUGH RAILING

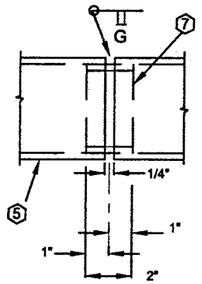

SHOP RAIL
SPLICE DETAIL

(LOCATION MUST BE
SHOWN ON SHOP DRAWINGS)

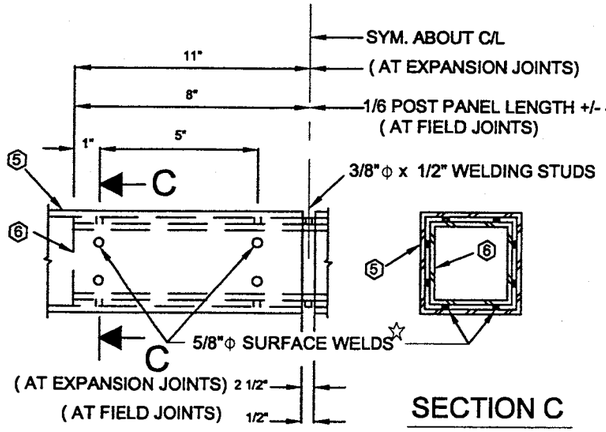

FIELD ERECTION
JOINT DETAIL

☆ MIN. 5/8" FLAT SURFACE DIA.
PUNCHINGS OR STUDS MAY
BE USED AS AN ALTERNATE.

SECTION C

LEGEND

1. POSTS ARE 2" X 2" X 1/8" STEEL TUBING.
2. LATERALS ARE 2" X 2" X 1/8" STEEL TUBING.
3. TOP RAILING IS 3" X 2" X 1/8" STEEL TUBING.
4. PICKETS ARE 1" X 1" X 12 GA. STEEL TUBING.
5. 2" X 2" X 1/8" OR 3" X 2" X 1/8" STEEL TUBING.
6. 1" X 1" X 11 GA." OR 2" X 1" X GA. STEEL TUBING.
7. 1 3/4" X 1 3/4" X 11 GA. TUBING.
   OR 2 3/4" X 1 3/4" X 11 GA. FABRICATED BOX.

NOTES

RAILING SHALL BE FABRICATED IN LENGTHS THAT INCLUDE 3 OR 4 POSTS.

RAIL POST AND RAILING SHALL BE GIVEN A NO. 6 COMMERCIAL BLAST CLEANING BY S.S.P.C. SPECIFICATIONS.

RAILING SHALL BE PAINTED BLACK, FED. COLOR #27038 OR APPROVED EQUAL. PAINT SHALL BE A TWO COAT SYSTEM ON ALL SURFACES AND EXTEND 4' BELOW GROUND LINE.

ALL MATERIALS USED IN FABRICATION SHALL BE MADE FROM MATERIALS CONFORMING TO A.S.T.M. DESIGNATION A709 GRADE 36 UNLESS NOTED OTHERWISE.

GA. MEANS BW GAUGE STEEL THICKNESS.

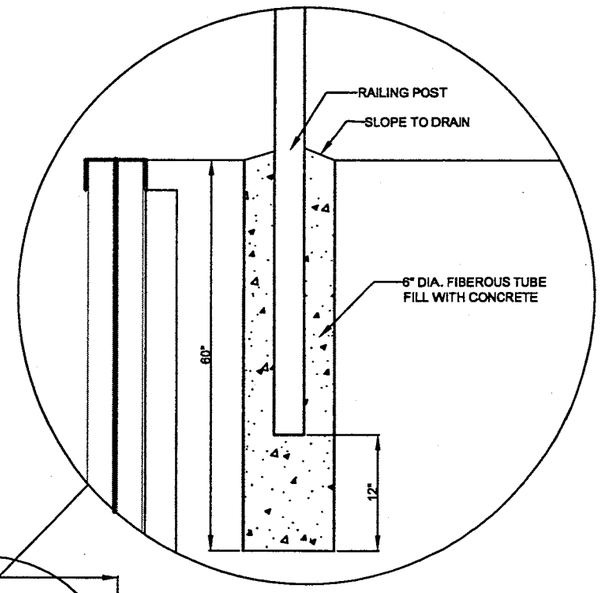

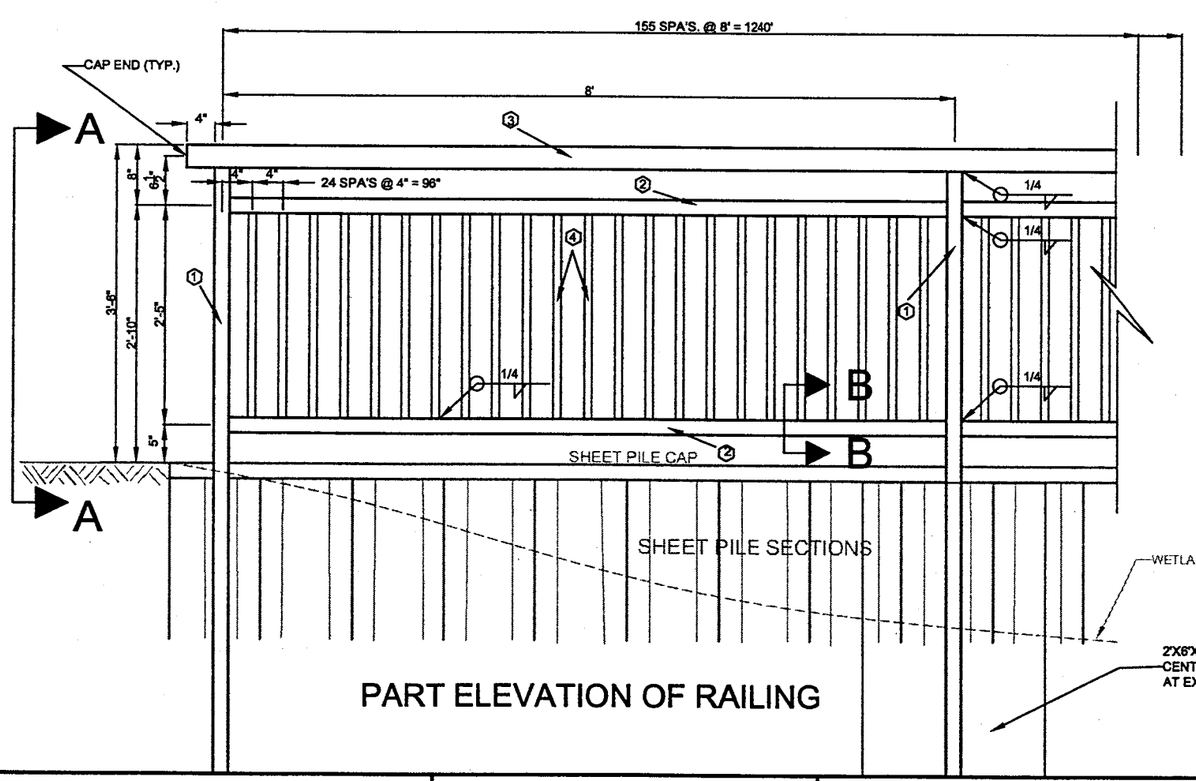

PART ELEVATION OF RAILING

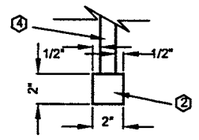

SECTION B-B
THROUGH RAILING

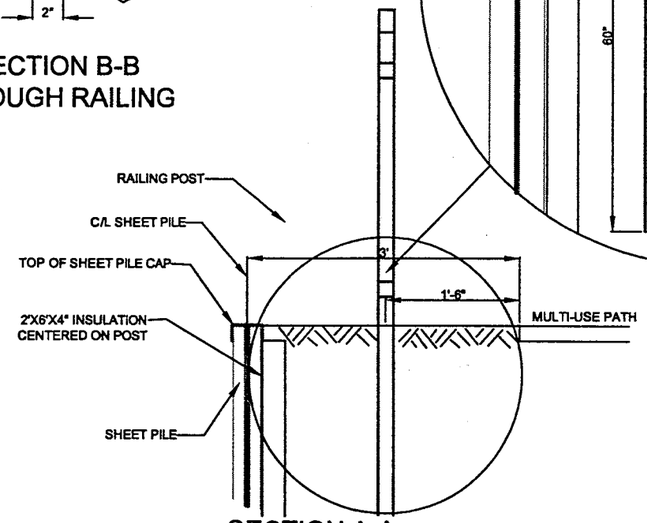

SECTION A-A
THROUGH SHEET PILE

STATE PROJECT NUMBER: 6651-01-00	HWY: CTH N	COUNTY: MARATHON	DETAILS, RAILING	SHEET NO: 2.68	E

P:\DRAFT\28940101 CTH N KK TO LILY\DETAILS.dwg, Layout11, 12/04/2003 10:20:25 AM

201.0115 CLEARING

STREET	STA. LOCATION	ACRES
CTH N	MISC.	1.7
CTH KK	MISC.	0.14
BORROW SITE	MISC.	2.5
	TOTAL	4.34

201.0215 GRUBBING

STREET	STA. LOCATION	ACRES
CTH N	MISC.	1.7
CTH KK	MISC.	0.14
BORROW SITE	MISC.	2.5
	TOTAL	4.34

204.9060.S REMOVING OLD CULVERTS

STREET	STA.	SIZE	EACH
OLD N	3+00	44X66 CMP	2
CTH N	32+00	72 " CMP	1
		TOTAL	3

203.0100 REMOVING SMALL PIPE CULVERTS

STREET	STA. LOCATION	EACH
CTH N	UNDISTRIBUTED	18
	TOTAL	18

204.0150 REMOVING CURB AND GUTTER

STREET	STA. LOCATION	L.F.
CTH N	CTH KK INTERSECTION	230
	TOTAL	230

205.0100 EXCAVATION COMMON

STREET	STA. LOCATION	CY
CTH N	UNDISTRIBUTED	22143.00
	TOTAL	22143.00

205.0200 EXCAVATION ROCK

STREET	STA. LOCATION	CY
CTH N	UNDISTRIBUTED	2,232.00
	TOTAL	2,232.00

205.0400 EXCAVATION MARSH

STREET	STA. LOCATION	CY
CTH N	UNDISTRIBUTED	12,403.00
	TOTAL	12,403.00

208.1100 SELECTED BORROW

STREET	STA. LOCATION	CY
CTH N	UNDISTRIBUTED	22,211.00
	TOTAL	22,211.00

211.0100 PREPARING OF FOUNDATION FOR ASPHALTIC PAVEMENT

STREET	STA. LOCATION	LS
CTH N	UNDISTRIBUTED	1
	TOTAL	1

213.0100 FINISHING ROADWAY

STREET	STA. LOCATION	EACH
CTH N	UNDISTRIBUTED	1
	TOTAL	1

214.0100 OBLITERATING OLD ROAD

STREET	STA. LOCATION	STATIONS
CTH N	UNDISTRIBUTED	6
	TOTAL	6

305.0110 BASE AGGREGATE DENSE 3/4-INCH

STREET	STA. LOCATION	TONS
CTH N	UNDISTRIBUTED	50,000.00
	TOTAL	50,000.00

325.0100 PULVERIZE AND RELAY

STREET	STA. LOCATION	TONS
CTH KK	UNDISTRIBUTED	3,370.00
	TOTAL	3,370.00

460.3000 QMP ASPHALTIC MIXTURE

STREET	STA. LOCATION	TONS
CTH N	UNDISTRIBUTED	15120
	TOTAL	15120

455.0300 ASPHALTIC MATERIAL FOR PLANT MIXES

STREET	STA. LOCATION	TONS
CTH N	UNDISTRIBUTED	990
	TOTAL	990

460.1100 ASPHALTIC CONCRETE PAVEMENT TYPE E-0.3

STREET	STA. LOCATION	TONS
CTH N	UNDISTRIBUTED	2,285.00
	TOTAL	2,285.00

460.1103 ASPHALTIC CONCRETE PAVEMENT TYPE E-3

STREET	STA. LOCATION	TONS
CTH N	UNDISTRIBUTED	14,234
	TOTAL	14,234

465.0315 ASPHALTIC FLUMES

STREET	SY
CTH KK	8.00
TOTAL	8.00

490.0200 SALVAGED ASPHALTIC PAVEMENT MILLING

STREET	STA. LOCATION	S.Y.
CTH N	UNDISTRIBUTED	22,359
	TOTAL	22,359

530.0112 C.P.CULVERT PIPE, CL III, 12-INCH

STREET	STA. LOCATION	L.F.
CTH N	UNDISTRIBUTED	46
	TOTAL	46

530.0118 C.P.CULVERT PIPE, CL III, 18-INCH

STREET	STA. LOCATION	L.F.
CTH N	UNDISTRIBUTED	48
	TOTAL	48

523.0138 H. E. CULVERT PIPE, CL III, 38x60-INCH

STREET	STA. LOCATION	L.F.
CTH N	UNDISTRIBUTED	304
	TOTAL	304

520.0148 R.C.CULVERT PIPE, CL III, 48-INCH

STREET	STA. LOCATION	L.F.
CTH N	UNDISTRIBUTED	152
	TOTAL	152

521.1012 APRON ENDWALLS FOR CULVERT PIPE, 12-INCH

STREET	STA. LOCATION	EACH
CTH N	UNDISTRIBUTED	2
	TOTAL	2

521.1018 APRON ENDWALLS FOR CULVERT PIPE, 18-INCH

STREET	STA. LOCATION	EACH
CTH N	UNDISTRIBUTED	2
	TOTAL	2

522.1012 APRON ENDWALLS FOR CULVERT PIPE R.C., 12-INCH

STREET	STA. LOCATION	EACH
CTH N	UNDISTRIBUTED	3
	TOTAL	3

522.1015 APRON ENDWALLS FOR CULVERT PIPE R.C., 15-INCH

STREET	STA. LOCATION	EACH
CTH N	UNDISTRIBUTED	2
	TOTAL	2

520.1024 APRON ENDWALLS FOR CULVERT PIPE R.C., 24-INCH

STREET	STA. LOCATION	EACH
CTH N	UNDISTRIBUTED	4
	TOTAL	4

520.1036 APRON ENDWALLS FOR CULVERT PIPE, 36-INCH

STREET	STA. LOCATION	EACH
OLD N	UNDISTRIBUTED	2
	TOTAL	2

512.0500 PERMANENT SHEET PILING DELIVERED

STREET	STA. LOCATION	S.F.
CTH N	UNDISTRIBUTED	30651
	TOTAL	30651

512.0600 PERMANENT SHEET PILING DRIVEN

STREET	STA. LOCATION	S.F.
CTH N	32+50-45+30, 60' LT	30651
	TOTAL	30651

SPV.0090 SPECIAL 01 STEEL RAILING

STREET	STA. LOCATION	L.F.
CTH N	32+50-45+30, 60' LT	1240
	TOTAL	1240

SPV.0090 SPECIAL 02 STEEL SHEET PILE CAP

STREET	STA. LOCATION	L.F.
CTH N	32+50-45+30, 60' LT	1243
	TOTAL	1243

520.1042 APRON ENDWALLS FOR CULVERT PIPE, 42-INCH

STREET	STA. LOCATION	EACH
CTH N	UNDISTRIBUTED	8
	TOTAL	8

601.0407 CONCRETE CURB & GUTTER 18-INCH, TYPE D

STREET	STA. LOCATION	L.F.
CTH N	UNDISTRIBUTED	4,817
	TOTAL	4,817

601.0205 CONCRETE CURB & GUTTER 24-INCH TYPE D,MOUNTABLE

STREET	STA. LOCATION	L.F.
CTH N	UNDISTRIBUTED	5,924
	TOTAL	5,924

601.0411 CONCRETE CURB & GUTTER 30-INCH TYPE D

STREET	STA. LOCATION	L.F.
CTH N	UNDISTRIBUTED	4,488
	TOTAL	4,488

601.0423 CONCRETE CURB & GUTTER 36-INCH, TYPE D

STREET	STA. LOCATION	L.F.
CTH N	UNDISTRIBUTED	6,052
CTH KK	UNDISTRIBUTED	1,191
	TOTAL	7,243

606.0300 RIPRAP HEAVY

STREET	STA. LOCATION	C.Y.
CTH N	UNDISTRIBUTED	203
	TOTAL	203

606.0200 RIPRAP MEDIUM

STREET	STA. LOCATION	C.Y.
CTH N	UNDISTRIBUTED	351
	TOTAL	351

608.0312 REINFORCED CONCRETE PIPE, CL III STORM SEWER, 12-INCH

STREET	STA. LOCATION	L.F.
CTH N	UNDISTRIBUTED	1322
	TOTAL	1322

608.0312 REINFORCED CONCRETE PIPE, CL III STORM SEWER, 15-INCH

STREET	STA. LOCATION	L.F.
CTH N	UNDISTRIBUTED	204
	TOTAL	204

608.0318 REINFORCED CONCRETE PIPE, CL III STORM SEWER, 18-INCH

STREET	STA. LOCATION	L.F.
CTH N	UNDISTRIBUTED	651
	TOTAL	651

608.0324 REINFORCED CONCRETE PIPE, CL III STORM SEWER, 24-INCH

STREET	STA. LOCATION	L.F.
CTH N	UNDISTRIBUTED	2164
	TOTAL	2164

608.0336 REINFORCED CONCRETE PIPE, CL III STORM SEWER, 36-INCH

STREET	STA. LOCATION	L.F.
CTH N	UNDISTRIBUTED	402
	TOTAL	402

611.0201 MANHOLES, TYPE 1

STREET	STA. LOCATION	EACH
CTH N	UNDISTRIBUTED	14
	TOTAL	14

SPV.0060,01 MANHOLES, TYPE 1 MOD

STREET	STA. LOCATION	EACH
CTH N	UNDISTRIBUTED	3
	TOTAL	3

SPV.0060, 02 MANHOLES, TYPE 3 MOD

STREET	STA. LOCATION	EACH
CTH N	UNDISTRIBUTED	1
	TOTAL	1

611.0301 INLETS TYPE 1

STREET	STA. LOCATION	EACH
CTH N	UNDISTRIBUTED	10
	TOTAL	10

611.0303 INLETS TYPE 3

STREET	STA. LOCATION	EACH
CTH N	UNDISTRIBUTED	52
	TOTAL	52

611.0530 MANHOLE COVERS, TYPE J

STREET	STA. LOCATION	EACH
CTH N	UNDISTRIBUTED	15
	TOTAL	15

611.0636 INLET COVERS, TYPE HM-S

STREET	STA. LOCATION	EACH
CTH N	UNDISTRIBUTED	23
	TOTAL	23

611.0600 INLET COVERS, TYPE A

STREET	STA. LOCATION	EACH
CTH N	UNDISTRIBUTED	3
	TOTAL	3

611.0606 INLET COVERS, TYPE B

STREET	STA. LOCATION	EACH
CTH N	UNDISTRIBUTED	1
	TOTAL	1

611.0624 INLET COVERS, TYPE H

STREET	STA. LOCATION	EACH
CTH N	UNDISTRIBUTED	32
	TOTAL	32

611.0666 INLET COVERS, TYPE Z

STREET	STA. LOCATION	EACH
CTH N	UNDISTRIBUTED	6
	TOTAL	6

614.0305 STEEL PLATE BEAM GUARD, CLASS A

STREET	STA. LOCATION	L.F.
CTH N	UNDISTRIBUTED	300
	TOTAL	300

614.0370 STEEL PLATE BEAM GUARD ENERGY ABSORBING TERMINAL

STREET	STA. LOCATION	EACH
CTH N	UNDISTRIBUTED	2
	TOTAL	2

619.1000 MOBILIZATION

STREET	STA. LOCATION	EACH
CTH N	UNDISTRIBUTED	1
	TOTAL	1

620.0100 CONCRETE CORRUGATED MEDIAN

STA. LOCATION	S.F.
UNDISTRIBUTED	170
TOTAL	170

620.0300 CONCRETE MEDIAN NOSE, SLOPED

STA. LOCATION	S.F.
UNDISTRIBUTED	253
TOTAL	253

621.0100 LANDMARK REFERENCE MONUMENTS

STREET	STA. LOCATION	EACH
CTH N	UNDISTRIBUTED	25
	TOTAL	25

624.0100 WATER

STREET	STA. LOCATION	MGAL
CTH N	UNDISTRIBUTED	1000
	TOTAL	1000

625.0100 TOPSOIL

STREET	STA. LOCATION	S.Y.
CTH N	UNDISTRIBUTED	59,000.00
	TOTAL	59,000.00

625.0500 SALVAGED TOPSOIL

STREET	STA. LOCATION	S.Y.
CTH N	UNDISTRIBUTED	18,600.00
	TOTAL	18,600.00

627.0200 MULCHING

STREET	STA. LOCATION	S.Y.
CTH N	UNDISTRIBUTED	52,000.00
	TOTAL	52,000.00

Note: With type A soil stabilizer

628.1105 EROSION BALES, DELIVERED

STREET	STA. LOCATION	EACH
CTH N	UNDISTRIBUTED	500
	TOTAL	500

628.1110 EROSION BALES, INSTALLED

STREET	STA. LOCATION	EACH
CTH N	UNDISTRIBUTED	500
	TOTAL	500

628.1505 SILT FENCE DELIVERED

STREET	STA. LOCATION	L.F.
CTH N	UNDISTRIBUTED	8,000.00
	TOTAL	8,000.00

628.1510 SILT FENCE INSTALLED

STREET	STA. LOCATION	L.F.
CTH N	UNDISTRIBUTED	8,000.00
	TOTAL	8,000.00

628.1520 SILT FENCE MAINTENANCE

STREET	STA. LOCATION	L.F.
CTH N	UNDISTRIBUTED	8,000.00
	TOTAL	8,000.00

628.1905 MOBILIZATIONS,EROSION CONTROL

STREET	STA. LOCATION	EACH
CTH N	UNDISTRIBUTED	2
	TOTAL	2

628.1910 MOBILIZATIONS, EMERGENCY EROSION CONTROL

STREET	STA. LOCATION	EACH
CTH N	UNDISTRIBUTED	2
	TOTAL	2

628.2020 EROSION MAT DELIVERED CLASS I URBAN TYPE B

STREET	STA. LOCATION	S.Y.
CTH N	UNDISTRIBUTED	7,000.00
	TOTAL	7,000.00

628.3020 EROSION MAT INSTALLED CLASS I URBAN TYPE B

STREET	STA. LOCATION	S.Y.
CTH N	UNDISTRIBUTED	7,000.00
	TOTAL	7,000.00

629.0205 FERTILIZER, TYPE A

STREET	STA. LOCATION	CWT.
CTH N	UNDISTRIBUTED	37.5
	TOTAL	37.5

629.1100 AGRICULTURAL LIMESTONE TREATMENT

STREET	STA. LOCATION	TON
OLD N	UNDISTRIBUTED	20
	TOTAL	20

630.0140 SEEDING MIXTURE NO. 40

STREET	STA. LOCATION	LB.
CTH N	UNDISTRIBUTED	2,200.00
	TOTAL	2,200.00

630.0200 SEEDING, TEMPORARY

STREET	STA. LOCATION	LB.
CTH N	UNDISTRIBUTED	550
	TOTAL	550

643.0300 TRAFFIC CONTROL DRUMS

STREET	STA. LOCATION	DAYS
CTN N	UNDISTRIBUTED	18000
	TOTAL	18000

643.0420 TRAFFIC CONTROL BARRICADES, TYPE III

STREET	STA. LOCATION	DAYS
CTH N	UNDISTRIBUTED	6000
	TOTAL	6000

643.0705 TRAFFIC CONTROL, WARNING LIGHTS, TYPE A

STREET	STA. LOCATION	DAYS
CTH N	UNDISTRIBUTED	6000
	TOTAL	6000

643.0900 TRAFFIC CONTROL, SIGNS

STREET	STA. LOCATION	DAYS
CTH N	UNDISTRIBUTED	3000
	TOTAL	3000

64326 TRAFFIC CONTROL, DETOUR

STREET	STA. LOCATION	LS
CTH N	UNDISTRIBUTED	1
	TOTAL	1

645.0120 GEOTEXTILE FABRIC, TYPE HR

STREET	STA. LOCATION	S.Y.
CTH N	UNDISTRIBUTED	1,068.00
	TOTAL	1,068.00

646.0106 PAVEMENT MARKING EPOXY 4 INCH

STREET	STA. LOCATION	L.F.
CTH N	UNDISTRIBUTED	33,290.00
	TOTAL	33,290.00

646.0226 PAVEMENT MARKING CHANNELIZING EPOXY 8 INCH

STREET	STA. LOCATION	L.F.
CTH N	UNDISTRIBUTED	45,047.00
	TOTAL	45,047.00

647.0566 PAVEMENT MARKING, STOP LINE EPOXY 18-INCH

STREET	STA. LOCATION	L.F.
CTH N	UNDISTRIBUTED	99
	TOTAL	99

647.0786 PAVEMENT MARKING CROSSWALK EPOXY 12-INCH

STREET	STA. LOCATION	L.F.
CTH N	UNDISTRIBUTED	651
	TOTAL	651

647.0166 PAVEMENT MARKIN ARROWS EPOXY TYPE 2

STREET	STA. LOCATION	EACH
CTH N	UNDISTRIBUTED	8
	TOTAL	8

647.0196 PAVEMENT MARKIN ARROWS EPOXY TYPE 5

STREET	STA. LOCATION	EACH
CTH N	UNDISTRIBUTED	1
	TOTAL	1

647.0606 PAVEMENT MARKING EPOXY ISLAND NOSE

STREET	STA. LOCATION	EACH
CTH N	UNDISTRIBUTED	10
	TOTAL	10

649.0100 TEMPORARY PAVEMENT MARKING

STREET	STA. LOCATION	EACH
CTH N	UNDISTRIBUTED	6,800.00
	TOTAL	6,800.00

650.4000 CONSTRUCTION STAKING STORM SEWER SYSTEM

STREET	STA. LOCATION	EACH
CTH N	UNDISTRIBUTED	115
	TOTAL	115

650.4500 CONSTRUCTION STAKING SUBGRADE

STREET	STA. LOCATION	L.F.
CTH N	UNDISTRIBUTED	13777
	TOTAL	13777

650.5000 CONSTRUCTION STAKING BASE

STREET	STA. LOCATION	L.F.
CTH N	UNDISTRIBUTED	13777
	TOTAL	13777

650.5500 CONSTRUCTION STAKING, CURB, GUTTER, CURB & GUTTER

STREET	STA. LOCATION	L.F.
CTH N	UNDISTRIBUTED	21303
	TOTAL	21303

650.6000 CONSTRUCTION STAKING, PIPE CULVERTS

STREET	STA. LOCATION	EACH
CTH N	UNDISTRIBUTED	8
	TOTAL	8

650.8500 CONSTRUCTION STAKING ELECTRICAL INSTALLATIONS

STREET	STA. LOCATION	LS
CTH N	UNDISTRIBUTED	1
	TOTAL	1

650.9900 CONSTRUCTION STAKING INITIAL LAYOUT

STREET	STA. LOCATION	L.F.
CTH N	UNDISTRIBUTED	7777
	TOTAL	7777

652.0210 NONMETALLIC CONDUIT, SCH. 40, 1 INCH

STREET	STA. LOCATION	L.F.
CTH N	CTH KK	522
	TOTAL	522

652.0225 NONMETALLIC CONDUIT, SCH. 40, 2 INCH

STREET	STA. LOCATION	L.F.
CTH N	CTH KK	382
	TOTAL	382

652.0235 NONMETALLIC CONDUIT, SCH. 40, 3 INCH

STREET	STA. LOCATION	L.F.
CTH N	CTH KK	868
	TOTAL	868

652.0800 LOOP DETECTOR CONDUIT

STREET	STA., LOCATION	L.F.
CTH N	CTH KK	986
	TOTAL	986

654.0102 CONCRETE BASES TYPE 2

STREET	STA. LOCATION	EACH
CTH N	CTH KK	2
	TOTAL	2

653.0120 PULL BOXES STEEL 18 X 24 INCH

STREET	STA. LOCATION	EACH
CTH N	CTH KK	10
	TOTAL	10

653.0135 PULL BOXES STEEL 24 X 36 INCH

STREET	STA. LOCATION	EACH
CTH N	CTH KK	6
	TOTAL	6

690.0100 SAWING EXISTING PAVEMENT

STREET	STA. LOCATION	L.F.
CTH N	UNDISTRIBUTED	160
	TOTAL	160

SPV.0165 SPECIAL 01 INSULATION

STREET	LOCATION	S.F.
CTH N	UTILITY PIPES	2920
CTH N	SHEET PILE WALL	1863
	TOTAL	4783

CONVENTIONAL SIGNS AND ABBREVIATIONS

- TOWN OR RANGE LINE
- SECTION LINE
- QUARTER LINE
- SIXTEENTH LINE
- EXISTING R/W LINE
- PROPOSED OR NEW R/W LINE
- PROPERTY LINE
- T.I. LIMITS
- LIMITED HIGHWAY EASEMENT
- LOT LINE
- REFERENCE LINE
- SLOPE INTERCEPT
- NO ACCESS (By Previous Acquistion)
- NO ACCESS (By Acquisition)
- NO ACCESS (By Statutory Authority)
- CORPORATE LIMITS
- RAILROAD

- COMBUSTIBLE FLUIDS
- BUILDING
- FOUND IRON PIPE
- FOUND IRON ROD
- TEMPORARY INTEREST EASEMENT
- SERVICE PEDESTAL
- SECTION CORNER

Acres	Ac.	Page	P
Access Restriction	A.R.	Permanent Limited Easement	P.L.E.
Access Point	A.P.	Point of Curvature	P.C.
Ahead	AH.	Point of Intersection	P.I.
Back	Bk.	Point of Tangency	P.T.
Central Angle	Δ	Point of Curve	P.O.C.
Center Line	C	Point on Tangent	P.O.T.
Certified Survey Map	C.S.M.	Property Line	P.L.
Company	Co.	Project	Proj.
Corner	Cor.	Radius/Range	R
County Trunk Highway	C.T.H	Reference Line	R
Curve	Cur.	Remaining	Rem.
Degree of Curve	D	Right	R
East	E	Right of Way	R/W
East Grid Coordinate	X	Section	Sec.
Found Iron Pipe	FIP	Shed	S.
Found Iron Rod	FIR	South	S
Feet	Ft.	Southeast	SE
Garage	Gar.	Southwest	SW
House	H.	Square Feet	S.F.
Left	L	State Trunk Highway	S.T.H.
Length of Curve	L=	Station	Sta.
Long Chord	LC	Tangent Length of Curve	T
Long Chord Bearing	L.C.B.	Temporary Interests	TI
Mile	Mi.	Temp	Temp
Monument	Mon.	Town	T
North	N	United States Highway	U.S.H.
North Grid Coordinate	Y	Vol	Vol
Northeast	NE	West	W
Northwest	NW		

R/W PROJECT NUMBER	SHEET NUMBER	TOTAL SHEETS
FEDERAL PROJECT NUMBER	4.1	9

PLAT OF RIGHT OF WAY REQUIRED FOR

CTH N

CTH KK TO LILY LANE

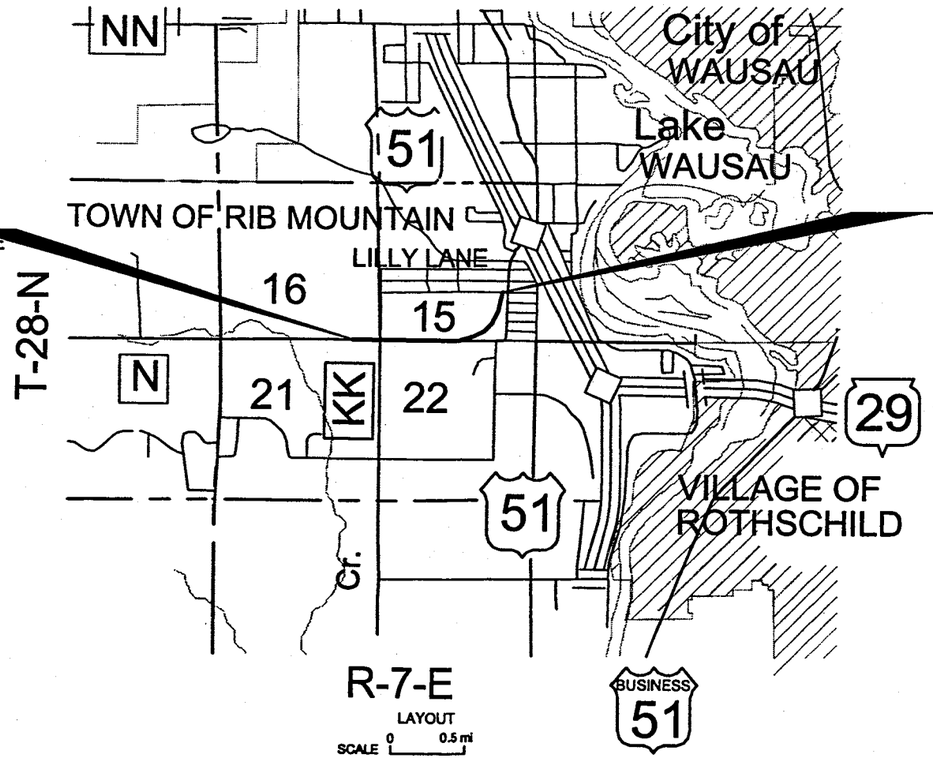

BEGIN RELOCATION ORDER
11.94' N. OF AND 988.11' E. OF THE S.E. COR. OF SEC. 16

END RELOCATION ORDER
1,557.32' N. OF AND 1,288.19' E. OF THE S. 1/4 COR. SEC. 15

6651-01-00 NET LENGTH OF CENTERLINE = 1.136 mi URBAN

NOTES

COORDINATES AND BEARINGS ON THIS PLAT ARE ORIENTED TO THE WISCONSIN COUNTY COORDINATE SYSTEM, MARATHON COUNTY ZONE, NAD 83 (1991) ADJUSTMENT.

THE COORDINATES SHOWN ARE GRID COORDINATES AND ARE TO BE USED AS GRID OR GROUND VALUES ON THIS PLAT.

RIGHT OF WAY MONUMENTS ARE TYPE 2 AND ARE PLACED PRIOR TO OR AT THE TIME OF LAND TITLE TRANSFER.

RIGHT OF WAY BOUNDARIES ARE DEFINED WITH COURSES OF THE PERIMETER OF THE HIGHWAY LANDS REFERENCED TO THE US PUBLIC LAND SURVEY OR OTHER LAND SURVEYS OF PUBLIC RECORD.

ALL PARCELS INCLUDED IN THIS PLAT ARE SUBJECT TO THE PROVISIONS OF THE ACCESS MANAGEMENT PLAN APPROVED FOR THE PROJECT BY MARATHON COUNTY.

ACCESS WIDTHS ARE AS FOLLOWS: RESIDENTIAL 16 FEET, AGRICULTURAL 24 FEET, COMMERCIAL 40 FEET.

APPROVED FOR
MARATHON COUNTY
BY

(Date) Glenn Speich, Highway Commissioner

ORIGINAL PLANS PREPARED BY
CENTRAL WISCONSIN ENGINEERS
& ARCHITECTS, INC.

WISCONSIN
TODD G. MROCHEK
S-2260
WESTON
WI
LAND SURVEYOR

2/18/04 (Date) Todd G. Mrochek (Signature)

REVISION DATE
1/27/03 ADDED EXISTING EASEMENTS
2/17/03 ADDITIONAL DIMENSIONS ADDED TO MATCH LEGAL DESCRIPTIONS
10/24/03 ADDED PARCEL 133
2/16/04 REVISED PARCEL 115 PLE

STATE OF WISCONSIN
DEPARTMENT OF TRANSPORTATION

APPROVED FOR DISTRICT OFFICE:

DATE: _____

SCHEDULE OF LANDS & INTERESTS REQUIRED

AREAS SHOWN IN THE TOTAL ACRES COLUMN MAY BE APPROXIMATE AND ARE DERIVED FROM TAX ROLLS OR OTHER AVAILABLE SOURCES AND MAY NOT INCLUDE LANDS OF THE OWNER WHICH ARE NOT CONTIGUOUS TO THE AREA TO BE ACQUIRED.

PARCEL NUMBER	SHEET NUMBER	OWNER(S)	INTEREST REQUIRED				TOTAL ACRES	R/W ACRES REQUIRED NEW	TOTAL ACRES REM.	T.I SQ. FT.	P.L.E. SQ. FT.
			FEE	T.I.	A.R.	P.L.E.					
100	4.4	HAROLD J. & MARIAN C. HALL JOINT REVOCABLE TRUST	FEE	T.I.	A.R.	-	39.98	0.076	39.814	4,701	-
101	4.4	RONALD & JOAN WIMMER	FEE	T.I.	A.R.	-	8.95	1.035	7.915	16,977	-
102	4.4	ROBERT E. & BARBARA J. PFAFF	FEE	T.I.	A.R.	-	0.62	0.082	0.538	538	-
103	4.4	RICHARD L. KERSTEN II REVOCABLE TRUST	FEE	-	A.R.	-	2.94	0.511	2.429	-	-
104	4.4	JOSEPH D. KRUEGER	FEE	T.I.	A.R.	-	0.79	0.034	0.756	3,749	-
105	4.4-4.5	JOHN R. & JOAN M. STIEL	FEE	T.I.	A.R.	-	0.79	0.034	0.756	8,244	-
106	4.5	RONALD C. & JOAN E. WIMMER	FEE	-	A.R.	-	0.79	0.148	0.642	-	-
107	4.5	RONALD C. & JOAN E. WIMMER	FEE	-	A.R.	P.L.E.	7.747	0.173	7.574	-	500
108	4.5	MARY A. RADER REVOCABLE TRUST	FEE	T.I.	A.R.	-	2.21	0.048	2.162	6,397	-
109	4.5	WAYNE A. & ELDINE H. ZUNKER	FEE	T.I.	A.R.	-	9.78	0.502	9.278	1,499	-
110	4.5	DARLO & JOHN AKEY, CAROL & WILLARD ZASTROW, NANCY & CHARLES F. LOY	FEE	T.I.	-	P.L.E.	1.11	0.056	1.054	5,679	3,228
111	4.5	WAYNE A. SZYMANSKI	FEE	T.I.	A.R.	-	2.91	0.07	2.84	6,110	-
112	4.5	BEVERLY A. MEIER	FEE	-	A.R.	-	1.03	0.213	0.817	-	-
113	4.5	TOWN OF RIB MOUNTAIN	FEE	T.I.	-	-	0.395	0.007	0.388	600	-
114	4.5-4.6	TOWN OF RIB MOUNTAIN	FEE	T.I.	A.R.	-	15.815	0.278	15.537	23,990	-
115	4.5-4.6	FRED DOEPKE JR.	FEE	T.I.	A.R.	P.L.E.	39	1.136	37.864	12,542	5,400
116	4.6	TOWN OF RIB MOUNTAIN	FEE	T.I.	A.R.	-	3.166	0.028	3.138	2,392	-
117	4.6-4.7-4.8	DENFELD CONSTRUCTION INC.	FEE	-	A.R.	-	9.82	0.505	9.315	-	-
118	4.7-4.8	MARATHON COUNTY	FEE	-	A.R.	-	35.3	6.534	28.766	-	-
119	4.8	MARATHON COUNTY	FEE	-	A.R.	-	1.28	1.101	0.179	-	-
120	4.8	MARATHON COUNTY	FEE	-	A.R.	-	1.998	0.58	1.418	-	-
121	4.8	MARATHON COUNTY	FEE	-	A.R.	-	0.47	0.27	0.2	-	-
122	4.8	MARATHON COUNTY	FEE	-	A.R.	-	0.47	0.47	0	-	-
123	4.8	TOWN OF RIB MOUNTAIN	FEE	-	A.R.	-	0.82	0.13	0.79	-	-
124	4.8	UNKNOWN OWNERSHIP	FEE	-	A.R.	-	0.481	0.247	0.234	-	-
125	4.7-4.9	JEAN W. LATTYAK	FEE	-	A.R.	-	0.97	0.305	0.665	-	-
126	4.7-4.9	DUANE J. WILSON	FEE	-	A.R.	-	1.07	0.016	1.054	-	-
127	4.9	DENFELD CONSTRUCTION INC.	FEE	-	A.R.	-	0.56	0.149	0.411	-	-
128	4.9	JAMES L. & CHERYL A. BUTTKE	FEE	-	A.R.	-	0.49	0.054	0.436	-	-
129	4.9	DENNIS DELONAY	FEE	-	A.R.	-	5.07	0.312	4.758	-	-
130	4.9	DENNIS DELONAY	FEE	-	A.R.	-	0.56	0.408	0.152	-	-
131	4.9	ELVERA DOCKSTADER, MARGO HOLLIBUSH, EUGENE DELONAY, OMER DELONAY JAMES DELONAY, GORDON DELONY, DENNIS DELONAY, ANTHONY DELONAY	FEE	-	A.R.	-	6.85	0.898	5.952	-	-
132	4.9	MARK A. & PAMELA R. CZERWINSKI	FEE	-	A.R.	-	0.5	0.5	0	-	-
133	4.4, 4.5	DUWAYNE GRAVEEN & MARJORIE ARCHIE CO-PERSONAL REPRESENTATIVES OF THE ESTATE OF ARLINE D. GRAVEEN	FEE	-	A.R.	-	0.55	0.028	0.52		
150	4.4-4.7,4.9	GENERAL TELEPHONE CO. & HEIRS	RELEASE OF RIGHTS				-	-	-	-	-
151	4.4, 4.5	VERIZON NORTH, INC.	RELEASE OF RIGHTS				-	-	-	-	-
152	4.5,4.6,4.8	RIB MOUNTAIN SANITARY DISTRICT	RELEASE OF RIGHTS				-	-	-	-	-
153	4.8	WI FUEL AND LIGHT & HEIRS	RELEASE OF RIGHTS				-	-	-	-	-
154	4.7,4.9	FEDERAL LAND BANK OF ST. PAUL	RELEASE OF RIGHTS				-	-	-	-	-

LEVELS ON =

REVISION DATE	DATE: 10/02	SCALE, FEET	HWY: CTH X	CONSTRUCTION PROJECT NUMBER: 6651-01-00	PS&E SHEET NO: 4.2	
1-27-03, 2-17-03, 10-24-03, 2-16-04		0 N/A	COUNTY: MARATHON	STATE R/W PROJECT NUMBER		E

SE. 1/4
SEC. 16-T28-R7

SW. 1/4
SEC. 15-T28-R7

SE. 1/4
SEC.15-T28-R7

NE. 1/4
SEC. 21-T28-R7

NW. 1/4
SEC. 22-T28-R7

NE. 1/4
SEC. 22-T28-R7

IRIS LANE
STRAWBERRY LANE
BITTERSWEET ROAD
CTH N
CTH KK
MAGNOLIA AVE. (PRIVATE)
RIB MOUNTAIN DRIVE
LILY LANE
IVY LANE
IRIS LANE
PANSY LANE
FLAX LANE
SOUTH MOUNTAIN ROAD
HOLLIBUSH LANE
ORCHID LANE
ORCHID CT.
CLOVER ROAD
BROOKFIELD LANE
PUSSYWILLOW LANE
WISTERIA LANE
TRILIUM LANE

REVISION DATE 1-27-03, 2-17-03, 10-24-03	DATE: 10/02	SCALE, FEET 0 200 400	HWY: CTH N	CONSTRUCTION PROJECT NUMBER: 6651-01-00	PS&E SHEET NO: 4.3
			COUNTY: MARATHON	STATE R/W PROJECT NUMBER	E

LEVELS ON

Y=180993.828
X=268325.198
FND 2" IP

SE-SE 16-28-07

NOTE:
1 ROD STRIP EASEMENT CENTERED ON THE 1ST BURIED CABLE GRANTED TO VERIZON NORTH, INC. SAID EASEMENT ADJACENT TO THE N. SIDE CTH N AND IN PARCELS 104, 106, 107, 108 AND 111. LOCATION OF EASE. NOT DETERMINED BECAUSE NO UNDERGROUND UTILITY LOCATED AT TIME OF SURVEY.

Y=183579.541
X=270954.272
FND PK NAIL

HOUSE

BEGIN RELOCATION ORDER
Sta. 0+11.452
Y = 180960.215
X = 269975.025

100
HAROLD J. & MARIAN C. HALL

1 - 16' ACCESS POINT STA. 4+50
1 - 16' ACCESS POINT STA. 7+50
1 - 24' ACCESS POINT

SLOPE INTERCEPT
EXISTING R/W
CTH N
SECTION LINE
S 88°44'13" E
N 89°00'38" W 2638.33'
C/L N 87°35'20" W
PI Sta. = 6+18
C/L N 88°44'13" W
N 88°44'13" W
S 88°44'13" E 948.51'
N 88°44'13" W 854.94'
NEW R/W
20' TI
10' TI
BARN
HOUSE
BITTERSWEET ROAD
C/L & SECTION LINE N 00°11'35" W
S 00°11'35" E
N 53°54'04" E
93.77'
115.74'
70.26'
45°
66'
27+00 KK
26+00 KK
24+00 KK
SEE DETAIL

RW 1 0+11.45 39.66' RT
RW 2 0+12.64 77.15' RT
37.50'
N 00°35'22" E
37.5'
RW 3 8+66.16 65.00' RT
8+86.50 65.00' RT
RW 4 23+60.99KK 60.00' LT
23+81.33KK 60.00' LT
RW 5 20+82.96KK 60.00' LT
RW 6 20+82.73KK 41.25' LT
RW 7 21+32.94KK 41.25' RT
RW 8 21+33.12KK 60' RT
RW 9 23+60.77KK 60' RT
RW 10 11+34.24 65.00' RT
RW 15 8+72.09 55' LT
RW 16 26+26.11KK 33' LT
RW 17 11+13.73 77.0' LT
RW 18 10+97.79 77.0' LT
RW 19 11+50.85 65' LT
RW 20 11+50.70 80.00' LT
RW 21 13+00.82 120.0' LT
RW 22 13+00.91 90.0' LT
RW 23 25+25.35KK 33' RT

1+89.78 35.03' LT
1+70.00 49.03' LT
6+09.80 64.85' RT
6+10.00 64.85' RT
7+35.00 85.0' LT
7+35.00 95.0' LT
7+65.00 85.0' LT
7+65.00 55.0' LT
2+00.00 73.39' RT
2+00.40 93.39' RT

1 - 24' ACCESS POINT TO STA. 1+00

150
EASEMENT TO GEN. TELEPHONE CO. AND HEIRS - 5 FT. EITHER SIDE OF FIRST LINE

RANDALL M. BLASCHKA

RONALD & JOAN WIMMER
101

COORDINATES

POINT NO.	NORTHING	EASTING
RW 1	180920.58	269973.35
RW 2	180883.08	269972.97
RW 3	180864.24	270827.70
RW 4	180787.58	270902.31
RW 5	180509.55	270900.87
RW 6	180509.22	270919.62
RW 7	180559.01	271002.38
RW 8	180559.09	271021.13
RW 9	180786.74	271022.30
RW 10	180862.24	271097.65
RW 17	181051.73	270995.79
RW 18	180992.09	271076.20

NE-NE 21-28-07

STATION 25+22.00 KK, 0.00 RT.
Y=180948.274
X=270963.138
FND PK NAIL

C DETAIL (NO SCALE)
SECTION LINE
FND SEC X PK
Sta. 10+00.35 BK
22' LT
C/L CTH N
22'
C/L CTH N
SECTION LINE = C/L CTH KK
Sta. 10+00.08 = Sta. 25+00.00 KK

INTERSECTION DETAIL (NO SCALE)
BITTERSWEET ROAD
CTH KK
CTH N
EXISTING R/W
N 00°11'35" W
N 89°00'38" W
N 89°55'30" E
S 00°17'45" W
33.17'
33.01'
33.00'
33.19'
41.25'
49.31'
49.26'

150
EASEMENT TO GEN. TEL. CO. AND HEIRS - EAST 4 RODS

SW-SW 15-28-07

LOT 15 | LOT 14 | LOT 13
HEIL'S SUBDIVISION

102
ROBERT E. & BARBARA J. PFAFF
LOT 16
1 - 16' ACCESS PT.

151
SEE NOTE

104
JOSEPH D. KRUEGER
LOT 17
1 - 16' ACCESS POINT STA. 12+50

105
JOHN R. & JOAN M. STIEL
LOT 18
CSM NO. 1526 VOL.6, PG. 210
1 - 16' ACCESS PT. STA. 13+20

HOUSE
SLOPE INTERCEPT
N 89°35'17" E
S 89°35'17" W
150.00'
NEW R/W
EXISTING R/W
SECTION LINE N 89°55'30" E 2637.96'
1369.91' (TO ANGLE PT. IN ROW)
C/L N 89°35'17" E
1362.11' (TO ANGLE PT. IN ROW)
N 89°35'17" E 376.82'
283.11'
S 89°35'17" W
33.00'
37.5'
55'
PL
N 00°11'35" W
N 00°41'35" W

103
RICHARD L KERSTEN II, REVOCABLE TRUST

133
DUWAYNE GRAVEEN & MARJORIE ARCHIE

1 - 16' ACCESS POINT TO STA. 22+50

LOT 1
CSM NO. 6850
VOL. 26, PG. 43

NW-NW 22-28-07

FND 1 1/4" IP

LOT 2
CAROL J. ZASTROW

Y=178314.443
X=270949.538
FND PK NAIL

REVISION DATE 1-27-03, 2-17-03, 10-24-03	DATE: 10/02	SCALE, FEET 0 50 100	HWY: CTH N	CONSTRUCTION PROJECT NUMBER: 6651-01-00	PS&E SHEET NO: 4.4
			COUNTY: MARATHON	STATE R/W PROJECT NUMBER	E

LEVELS ON =

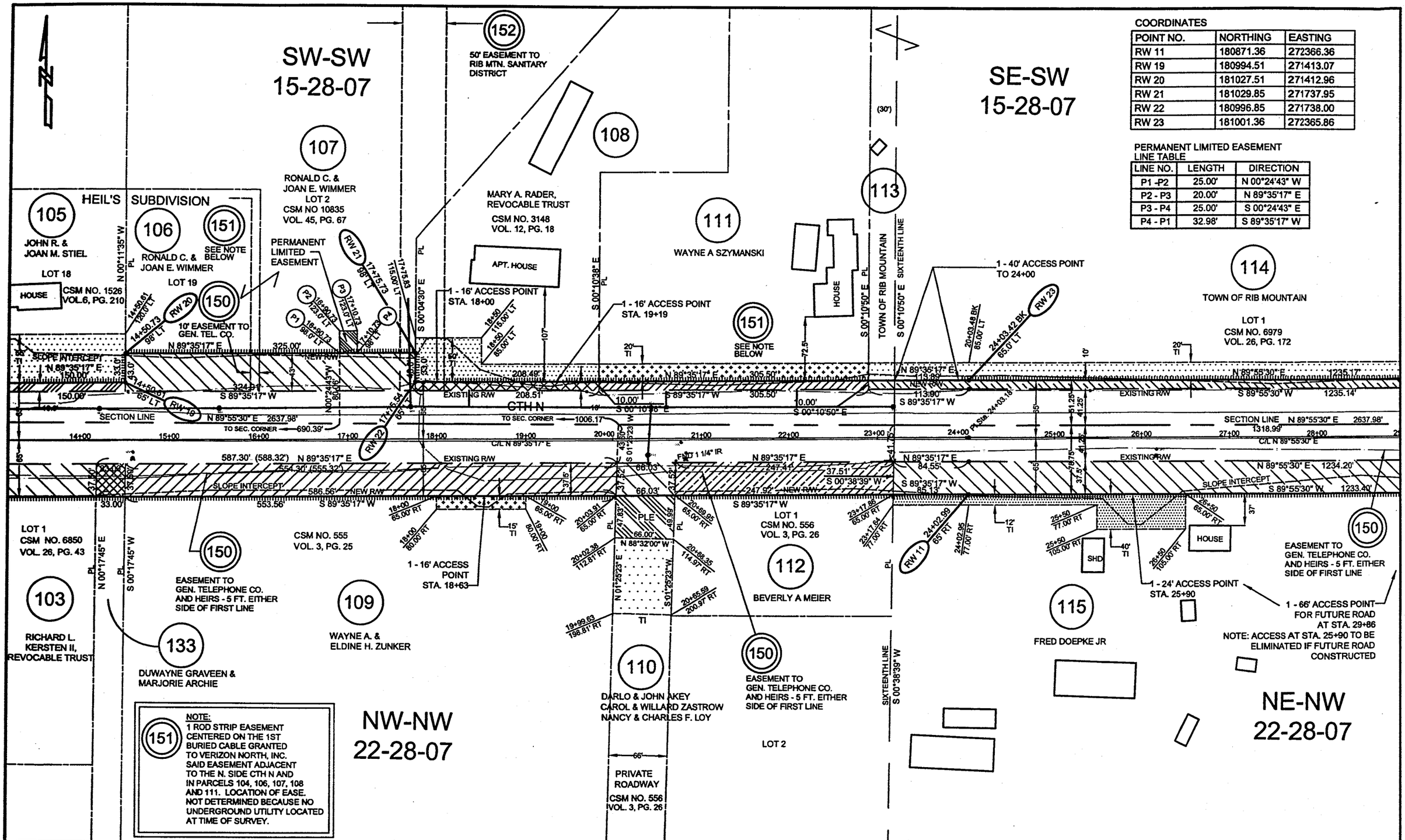

COORDINATES

POINT NO.	NORTHING	EASTING
RW 11	180871.36	272366.36
RW 19	180994.51	271413.07
RW 20	181027.51	271412.96
RW 21	181029.85	271737.95
RW 22	180996.85	271738.00
RW 23	181001.36	272365.86

PERMANENT LIMITED EASEMENT LINE TABLE

LINE NO.	LENGTH	DIRECTION
P1 -P2	25.00'	N 00°24'43" W
P2 - P3	20.00'	N 89°35'17" E
P3 - P4	25.00'	S 00°24'43" E
P4 - P1	32.98'	S 89°35'17" W

REVISION DATE 1-27-03, 2-17-03, 10-24-03	DATE: 10/02	SCALE, FEET 0 50 100	HWY: CTH N	CONSTRUCTION PROJECT NUMBER: 6651-01-00	PS&E SHEET NO: 4.5	
			COUNTY: MARATHON	STATE R/W PROJECT NUMBER		E

COORDINATES		
POINT NO.	NORTHING	EASTING
RW 12	180872.98	273600.65
RW 13	180868.37	273949.98
RW 24	181002.98	273601.52
RW 25	180998.36	273951.70

SE-SW
15-28-07

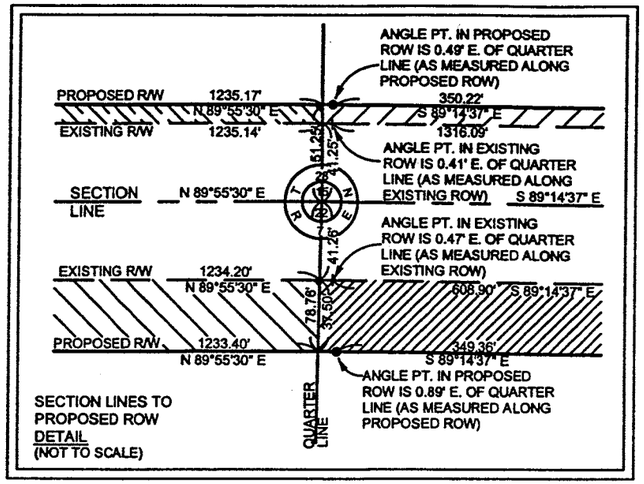

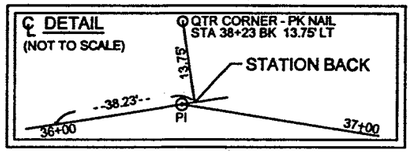

114
TOWN OF RIB MOUNTAIN
LOT 1
CSM NO. 6979
VOL. 26, PG. 172

116
TOWN OF RIB MOUNTAIN
OUTLOT 1
CSM NO. 6979
VOL. 26, PG. 172

RIB MOUNTAIN SANITARY DISTRICT
30' PERMANENT EASEMENT

SW-SE
15-28-07

28 15 22 7 T N R E

Y=180951.731
X=273601.122
STATION 36+38.23 BACK
13.75' LT.
FND PK NAIL

118
MARATHON COUNTY

1 - 66' ACCESS POINT
FOR FUTURE ROAD
STA. 29+86

152
30' EASEMENT TO
RIB MTN. SANITARY DISTRICT
PER CSM NO. 6979
VOL. 26, PG. 172

N 00°06'34" W
QUARTER LINE
PL

36+38.06 BK
85.00' LT
RW 24
36+38.69 BK
65' LT
39+87.97
65' LT
RW 25

N 89°55'30" E 1235.17'
S 89°55'30" W 1235.14'
SLOPE INTERCEPT
EXISTING R/W
CTH N
S 89°14'37" E 350.22'
N 89°14'37" W 1316.09'
NEW R/W
SEE C DETAIL
FND 1 1/2" IP
SECTION LINE N 89°55'30" E 2637.98'
1318.99'
SECTION LINE S 89°14'37" E 2632.26'
C/L N 89°55'30" E
C/L S 89°14'37" E
26+00 27+00 28+00 29+00 30+00 31+00 32+00 33+00 34+00 35+00 36+00 37+00 38+00 39+00 40+00
428.23'
S 00°04'30" E 78.75'
N 89°55'30" E 1234.20'
S 89°55'30" W 1233.40'
S 89°14'37" E 608.90'
N 89°14'37" W 349.36'
PC Sta. 38+38.13
PT Sta. 39+07.39
Δ = 16°27'37"
R = 915.00'
L = 262.87'
CL = 261.96'
CH = N 82°31'35" E
20' TI
10'
12' TI
40' TI
41.25'
51.25'
78.75'
37.5'
65'
35'
25+50 77.00' RT
25+50 105.00' RT
SHD
26+50 105.00' RT
26+50 65.00' RT
HOUSE
37'
1 - 24' ACCESS POINT
STA. 25+90
1 - 66' ACCESS POINT
FOR FUTURE ROAD
STA. 29+86
NOTE: ACCESS AT STA. 25+90 TO BE ELIMINATED IF FUTURE ROAD CONSTRUCTED
30+00 65.00' RT
30+00 77.00' RT
P8
30+90 65.00' RT
30+90 77.00' RT
P7
30+90 120.00' RT
32+10 65.00' RT
32+10 77.00' RT
P5
32+10 100.00' RT
P6
FRED DOEPKE JR
115
PERMANENT LIMITED EASEMENT
35+00 65.00' RT
35+00 77.00' RT
150
EASEMENT TO GEN. TELEPHONE CO. AND HEIRS - 5 FT. EITHER SIDE OF FIRST LINE
36+37.66 BK
65' RT
RW 12
RW 13
39+87.97
65' RT
DENFELD CONSTRUCTION, INC.
117
150
EASEMENT TO GEN. TELEPHONE CO. AND HEIRS - S. 2 RODS OF THE N. 4 RODS
Ic = 16°27'37"
R = 915.00'
L = 262.87'
CL = 261.96'
CH = N 82°31'35" E
S 00°59'26" W 2648.99'
QUARTER LINE
PL

NE-NW
22-28-07

NW-NE
22-28-07

PERMANENT LIMITED EASEMENT LINE TABLE

LINE NO.	LENGTH	DIRECTION
P5 -P6	35.00'	S 00°04'30" E
P6 - P7	121.66'	S 80°27'45" W
P7 - P8	55.00'	N 00°04'30" W
P8 - P5	120.00'	N 89°55'30" E

REVISION DATE 1-27-03, 2-17-03, 2-16-04	DATE: 10/02	SCALE, FEET 0 50 100	HWY: CTH N	CONSTRUCTION PROJECT NUMBER: 6651-01-00	PS&E SHEET NO: 4.6
			COUNTY: MARATHON	STATE R/W PROJECT NUMBER	E

LEVELS ON =

CURVE TABLE

CURVE NO.	C1	C2
DELTA	04°35'53"	12°38'20"
RADIUS	190.65'	124.65'
ARC LENGTH	15.41'	27.50'
CHORD	15.41'	27.44'
CHORD DIR.	N 86°35'20" W	S 82°35'06" E

SW-SE
15-28-07

118
MARATHON COUNTY

Ic = 85°01'02"
R = 785.00'
L = 1164.81'
CL = 1060.85'
CH = N 48°14'52" E

POT Sta. 47+11.15 =
BOP Sta. 0+00.00 C

PC Sta 1+97.09

39+87.97
65' LT
RW 25
NEW R/W
EXISTING R/W
N 89°14'37" W 1316.09'
CTH N
SECTION LINE
S 89°14'37" E 508.90'
PC Sta 39+87.97
SLOPE INTERCEPT
65' RT
42+32.16
RW 14
RW 13
Ic = 16°27'37"
R = 915.00'
L = 262.87'
CL = 261.96'
CH = S 82°31'35" W

DENFELD CONSTRUCTION, INC.
117
150
EASEMENT TO GEN. TELEPHONE CO. AND HEIRS - S. 2 RODS OF THE N. 4 RODS

154
RESERVED MINERAL RIGHTS IN PARCEL 117, 127 AND 128 TO FEDERAL LAND BANK OF ST. PAUL

117
DENFELD CONSTRUCTION, INC.

NW-NE
22-28-07

Ic = 10°18'09"
R = 335.00'
L = 60.24'
CL = 60.16'
CH = S 13°54'33" E

EASEMENT TO GENERAL TELEPHONE CO. AND HEIRS - 5 FT. EITHER SIDE OF FIRST LINE
150

JEAN W. LATTYAK
125
N 89°14'37" W PL 63.96'

127
DENFELD CONSTRUCTION INC.

EASEMENT TO GEN. TELEPHONE CO. AND HEIRS - W. 1 1/2 RODS OF THE E. 3 RODS
150

117

COORDINATES

POINT NO.	NORTHING	EASTING
RW 13	180868.37	273949.98
RW 14	180902.44	274209.72
RW 25	180998.36	273951.70
RW 28	180975.60	274917.42
RW 34	180894.79	274789.18
RW 35	180836.40	274803.64
RW 37	180757.35	274947.35
RW 38	180668.45	274961.05
RW 39	180599.83	274971.62

S 00°23'36" W 1227.28'
SIXTEENTH LINE
PERPETUAL RIGHT OF WAY DEDICATED TO PUBLIC AND TOWN OF RIB MTN.

LOT 2
CSM NO. 6165
VOL. 22, PG. 243
PARCEL 1
HOUSE
CSM NO. 7885
VOL. 30, PG. 148
PARCEL 2
HOUSE
LOT 4
CSM NO. 6165
VOL. 22, PG. 243
GAR
HOUSE

RW 28
3+70.57
83.83' LT
3+00
2+38
RW 34
3+99.12
65' RT
S 89°14'37" E 41.25'
2632.26'
4+00
S 89°14'37" E 98.73'
26.47'
PT Sta 4+71.05
4+71.05
65' RT
RW 35
110.83'
NEW R/W
N 08°45'28" W 202.88'
S 01°44'32" W 200.10'
S 08°45'28" E 7.00'
30'
65'
58'

28
T 15 14 N
R 22 23 E
7
Y=180916.979
X=276233.150
FND PK NAIL

FLAX LANE
RIB MOUNTAIN DRIVE
SOUTH MOUNTAIN ROAD
N 89°14'37" W 1316.13'
EXISTING R/W

1 - 16' ACCESS POINT STA. 5+65
126
DUANE J WILSON
LOT 1
LOT 2
LOT 3
HOUSE
DELONAY'S LOT 1
SUBDIVISION
LOT 5
LOT 6
LOT 4
NE-NE
22-28-07

S 01°03'16" W
208.75'
EXISTING R/W
ROAD
S 01°05'44" W 88.01'
N 08°45'28" W 88.98'
CLOVER
5+71.05
65' LT
RW 37
6+61.01
65' LT
RW 38
HOLLIBUSH LANE
EXISTING R/W
7+30.43
65' LT
RW 39
NEW R/W

REVISION DATE 1-27-03, 2-17-03	DATE: 10/02	SCALE, FEET 0 50 100	HWY: CTH N	CONSTRUCTION PROJECT NUMBER: 6651-01-00
			COUNTY: MARATHON	STATE R/W PROJECT NUMBER

PS&E SHEET NO: 4.7

E

LEVELS ON =

COORDINATES

POINT NO.	NORTHING	EASTING
RW 26	181704.79	274743.13
RW 27	182501.57	274823.23
RW 29	181555.42	274921.41
RW 30	181555.36	274929.03
RW 31	182209.94	274941.34
RW 32	182209.47	274966.49
RW 33	182500.78	274971.66

LINE TABLE

LINE NO.	LENGTH	DIRECTION
L1	16.83'	N 05°44'27" E
L2	25.15'	N 05°44'27" E

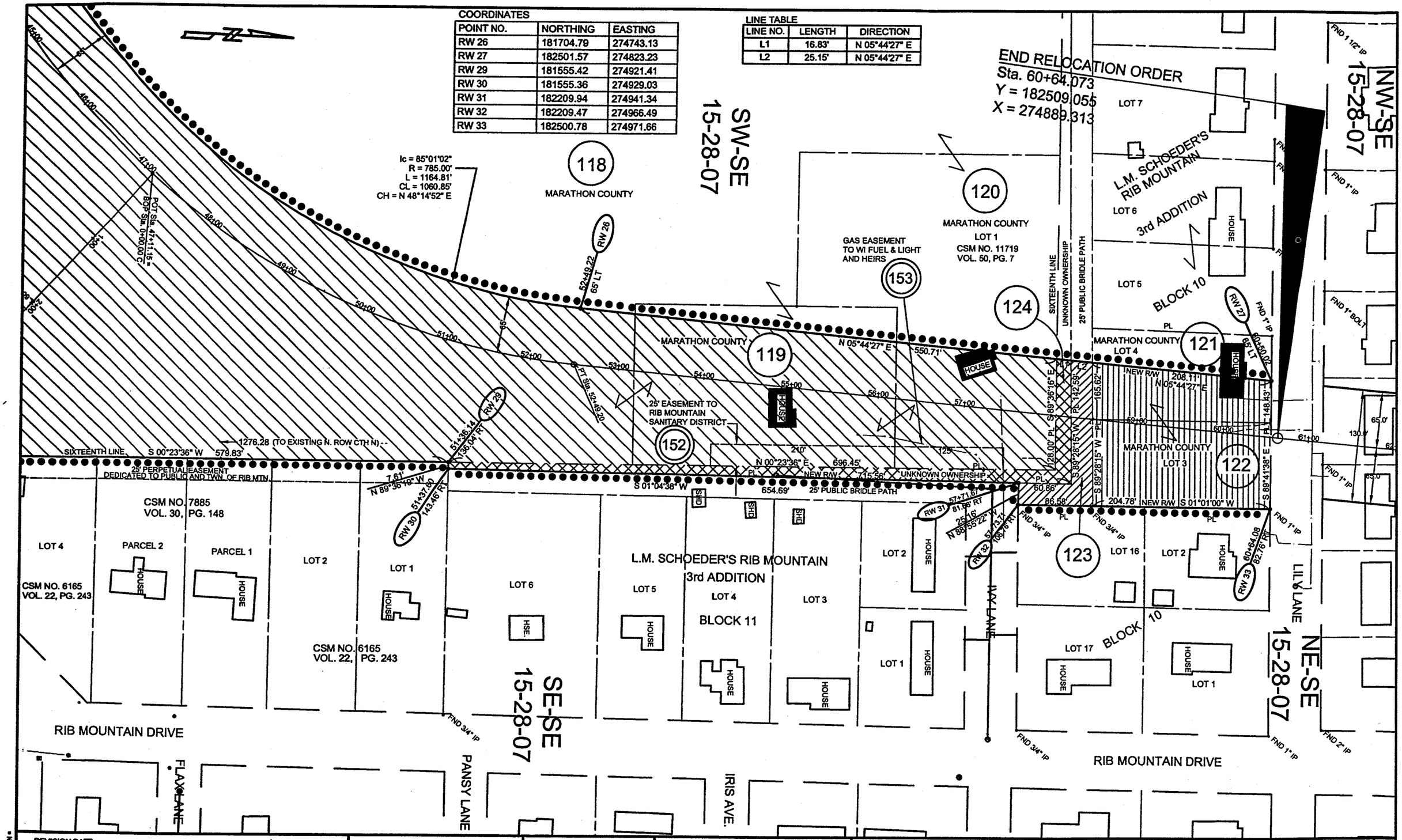

REVISION DATE 1-27-03, 2-17-03	DATE: 10/02	SCALE, FEET 0 50 100	HWY: CTH N	CONSTRUCTION PROJECT NUMBER: 6651-01-00	PS&E SHEET NO: 4.8	
			COUNTY: MARATHON	STATE R/W PROJECT NUMBER		E

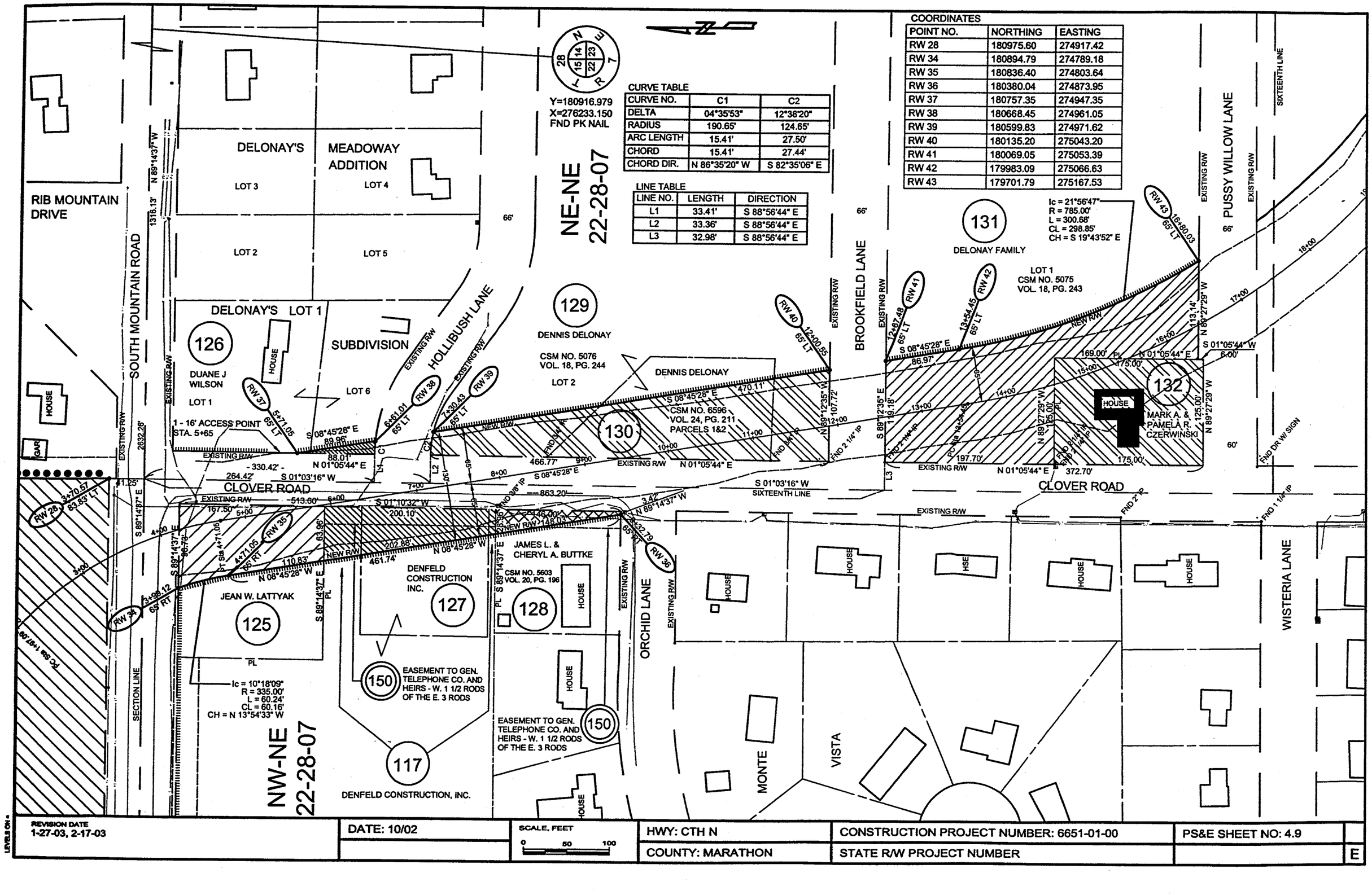

COORDINATES		
POINT NO.	NORTHING	EASTING
RW 28	180975.60	274917.42
RW 34	180894.79	274789.18
RW 35	180836.40	274803.64
RW 36	180380.04	274873.95
RW 37	180757.35	274947.35
RW 38	180668.45	274961.05
RW 39	180599.83	274971.62
RW 40	180135.20	275043.20
RW 41	180069.05	275053.39
RW 42	179983.09	275066.63
RW 43	179701.79	275167.53

CURVE TABLE		
CURVE NO.	C1	C2
DELTA	04°35'53"	12°38'20"
RADIUS	190.65'	124.65'
ARC LENGTH	15.41'	27.50'
CHORD	15.41'	27.44'
CHORD DIR.	N 86°35'20" W	S 82°35'06" E

LINE TABLE		
LINE NO.	LENGTH	DIRECTION
L1	33.41'	S 88°56'44" E
L2	33.36'	S 88°56'44" E
L3	32.98'	S 88°56'44" E

REVISION DATE 1-27-03, 2-17-03	DATE: 10/02	SCALE, FEET 0 50 100	HWY: CTH N	CONSTRUCTION PROJECT NUMBER: 6651-01-00
			COUNTY: MARATHON	STATE R/W PROJECT NUMBER

PS&E SHEET NO: 4.9

E

LEVELS ON =

BEGIN PROJECT
STATION 0+00.00
Y=180960.6929
X=269963.5834
SAW CUT REQ'D.

R/W
TEMPORARY INTEREST EASEMENT
SLOPE INTERCEPT
DITCHING FLOW DIRECTION
S 88°44'13" E
REPLACE 12" CMP
SECTION LINE
CTH N
1+00
CROWN LINE
N 87°35'20" W 618.00'
2+00
3+00
MOUNTABLE MEDIAN
4+00
CROWN LINE
5+00
B-1
B-2
B-3
15" CMP
GR PE
MB
12'
6"
4"
12'
TV
T
X
FO
DITCHING FLOW DIRECTION
854.94'
S 88°44'13" E
20 0 20

700.00' VC
K = 150.56
PVI STA 4+00.00
PVI EL 1273.43
VPC STA 0+00.00
VPC EL 1274.83
VPC STA 0+50.00
VPC EL 1274.85
EXIST. ROAD PROFILE
PROP. C/L PROFILE
0.234%
-0.351%
-0.351%
5.000%
ESTIMATED BEDROCK PROFILE
DITCH PROFILES
INV. 1264.62
18" CMCP
INV. 1263.17
PROP. C/L ELEV.
EXIST. C/L ELEV.

	-0+50	0+00	0+50	1+00	1+50	2+00	2+50	3+00	3+50	4+00	4+50	5+00	5+50
PROP. C/L ELEV.	1274.73	1274.82	1274.65	1274.40	1273.97	1273.38	1272.62	1271.70	1270.61	1269.38	1267.94	1266.35	1264.60
EXIST. C/L ELEV.			1274.68	1274.82	1275.09	1275.14	1274.96	1274.48	1273.57	1272.21	1270.59	1268.81	1266.78

1280 1276 1272 1268 1264 1260 1256 1252 1248

STATE PROJECT NUMBER: 6651-01-00	HWY: CTH N	COUNTY: MARATHON	PLAN AND PROFILE CTH N	SHEET NO: 5.1	E

P:\DRAFT\28940100 CTH N West Arterial\topo survey\RCp01001.dwg, Layout1, 12/05/2003 07:45:56 AM
LEVELS ON =

FILE NAME : PLOT DATE: 1 2 3 PLOT SCALE :

WISDOT/CADDS SHEET 40

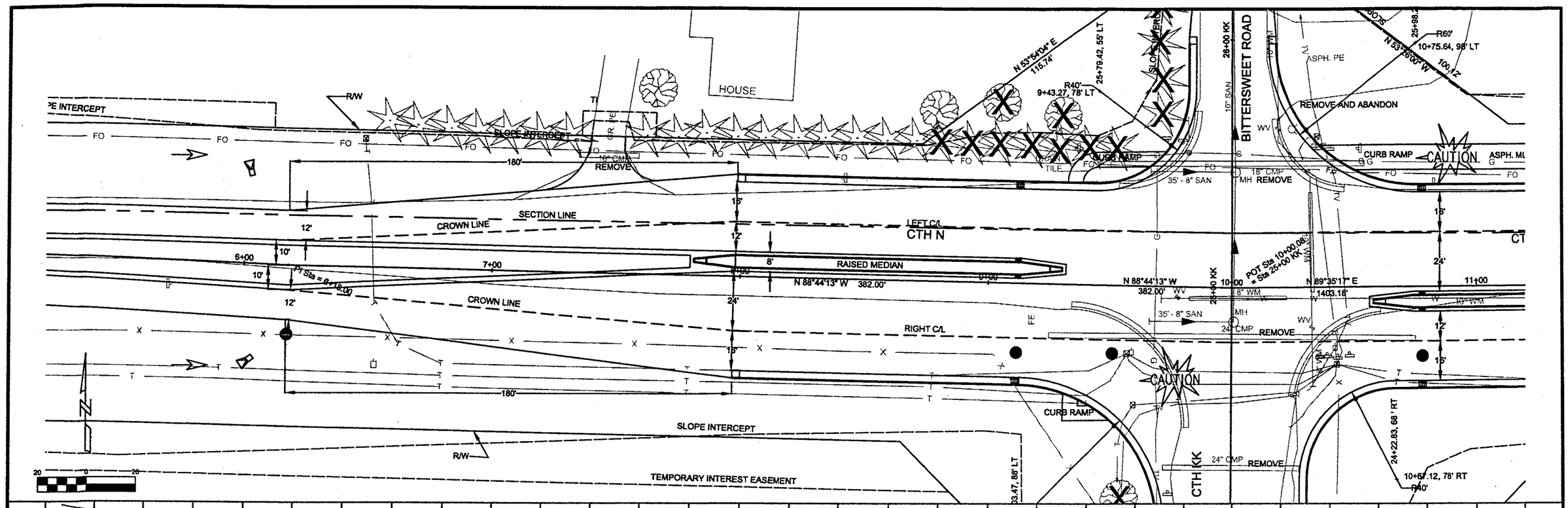

STATE PROJECT NUMBER: 6651-01-00	HWY: CTH N	COUNTY: MARATHON	PLAN AND PROFILE CTH N	SHEET NO: 5.2	E

LEVELS ON =

FILE NAME : P:\DRAFT\28940\00 CTH N West Arterial\topo survey\RCp02001.dwg, Layout1, 10/07/2003 02:50:17 PM

PLOT DATE: 1 2 3

PLOT SCALE :

WISDOT/CADDS SHEET 40

TI
SLOPE INTERCEPT
R/W
GR. FE
RELOCATE GRAVEL DRIVEWAY
ABANDON
WOODS
ASPH. MULTI USE PATH
18" CMP
REMOVE
CAUTION
FO
G
MH
LEFT C/L
CTH N
SECTION LINE
12+00
13+00
14+00
15+00
16+00
RAISED MEDIAN
MOUNTABLE MEDIAN
10" WM
WV
RIGHT C/L
WOODED
STEEL PLATE BEAM GUARD
N 89°35'17" E
1403.18'
POND
20 0 20

1240
1236
1232
1228
1224
1220
1216
1212
1208

-5.000%
PVC STA 12+10.00
PVC EL. 1232.93
EXIST. ROAD PROFILE
PROP. C/L PROFILE
PROP. C/L ELEV.
EXIST. C/L ELEV
PVI STA 16+00.00
PVI EL. 1213.43
1.697%
780.00' VC
K = 116.47

1238.43	1238.80		
		1235.93	1235.95
		1233.43	1233.53
		1230.99	1230.90
		1228.77	1228.51
		1226.77	1225.92
		1224.98	1223.58
		1223.40	1222.33
		1222.04	1220.74
		1220.89	1219.13
		1219.96	1218.12
		1219.24	1217.41
		1218.73	1216.86

11+00 11+50 12+00 12+50 13+00 13+50 14+00 14+50 15+00 15+50 16+00 16+50 17+00

STATE PROJECT NUMBER: 6651-01-00	HWY: CTH N	COUNTY: MARATHON	PLAN AND PROFILE CTH N	SHEET NO: 5,3 E

FILE NAME: P:\DRAFT\26940100 CTH N West Arterial\topo survey\RCp03001.dwg, Layout1, 12/05/2003 08:01:59 AM
LEVELS ON =
PLOT DATE:
1 2 3
PLOT SCALE :
WISDOT/CADDS SHEET 40

PLE
SLOPE INTERCEPT
T.I.
TEMPORARY INTEREST EASEMENT
R/W
ASPH. PE
FO
CAUTION
18" CMP
REMOVE
MH
MB
ASPH. MULTI USE PATH
LEFT C/L
SECTION LINE
RIGHT C/L
MOUNTABLE MEDIAN
CTH N
24'
8'
16'
17+00
18+00
19+00
20+00
21+00
22+00
10" WM
W
WV
POT Sta. 20+39.254 = Sta. = 2+00.00 M
LOWER UMT
MOUNTABLE MEDIAN
GR. PE
ASPH. APRON
POND
MAGNOLIA AVENUE
19+84.67, 78' RT
1+20.25, 52' LT
1+23.66, 52' RT
20+88.72, 78' RT
R/W
20 0 20

1232
1228
1224
1220
1216
1212
1208
1204
1200

LF STA 17+92.37
LF EL 1218.37
EXIST. ROAD PROFILE
PROP. C/L PROFILE
VPT STA 19+80.00
VPT EL 1220.04
VPC STA 20+40.00
VPC EL 1220.69
1.697%

PROP. C/L ELEV.
EXIST. C/L ELEV.

17+00	17+50	18+00	18+50	19+00	19+50	20+00	20+50	21+00	21+50	22+00	22+50
1218.73	1218.44	1218.37	1218.51	1218.86	1219.43	1220.21	1221.06	1221.79	1222.36	1222.76	1222.99
1216.86	1216.74	1216.94	1217.50	1218.48	1219.68	1220.97	1222.18	1223.35	1224.31	1224.98	1225.53

STATE PROJECT NUMBER: 6651-01-00	HWY: CTH N	COUNTY: MARATHON	PLAN AND PROFILE CTH N	SHEET NO: 54	E

FILE NAME : P:\DRAFT\28940100 CTH N West Arterial\topo surveyRCp04001.dwg, Layout1, 12/05/2003 08:06:05 AM
PLOT DATE:
LEVELS ON =
1 2 3
PLOT SCALE :
WISDOT/CADDS SHEET 40

T.I.

TEMPORARY INTEREST EASEMENT

SLOPE INTERCEPT

ASPH. PE

FO

G

W

MB

MH

ASPH. MULTI USE PATH

CAUTION

REMOVE

18" RCP

R/W

SLOPE INTERCEPT

R40'
28+04.00, 78 ' LT

BOC
28+41.00, 78 ' LT
1213.58

12'

13.44

13.20

14.24

CURB RAMP

BOC
28+04.41 ' LT
1214.82

CAUTION

LEFT C/L

SECTION LINE

56.6' VIM

23+00

24+00

25+00

26+00

27+00

28+00

MOUNTABLE MEDIAN

10" WIM

WV

REMOVE

22" RCP

RIGHT C/L

PI STA = 24+43.1773

ASPH. APRON

GR PE

WOODED

WOODED

SLOPE INTERCEPT

TEMPORARY INTEREST EASEMENT

R/W

HOUSE

20 0 20

1232
1228
1224
1220
1216
1212
1208
1204
1200

HP STA 22+95.75
HP EL 1223.06

PVI STA 24+80.00
PVI EL 1227.00

1.697%

720.00' VC
K = 150.73

-3.080%

EXIST. ROAD PROFILE

PROP. C/L PROFILE

VPT STA 27+60.00
VPT EL 1215.91

PROP. C/L ELEV.

EXIST. C/L ELEV.

1223.06	1225.94	1222.96	1226.20	1222.70	1226.08	1222.27	1225.45	1221.68	1224.76	1220.92	1224.03	1219.99	1222.96	1218.90	1221.67	1217.84	1220.19	1216.22	1218.69	1214.68	1217.06	1213.14	1215.38

23+00 23+50 24+00 24+50 25+00 25+50 26+00 26+50 27+00 27+50 28+00 28+50

STATE PROJECT NUMBER: 6651-01-00	HWY: CTH N	COUNTY: MARATHON	PLAN AND PROFILE CTH N	SHEET NO: 5.5	E

P:\DRAFT\28940100 CTH N West Arterial\topo survey\RCp05001.dwg, Layout1, 12/05/2003 08:12:27 AM

LEVELS ON =

FILE NAME : PLOT DATE: 1 2 3 PLOT SCALE :

WISDOT/CADDS SHEET 40

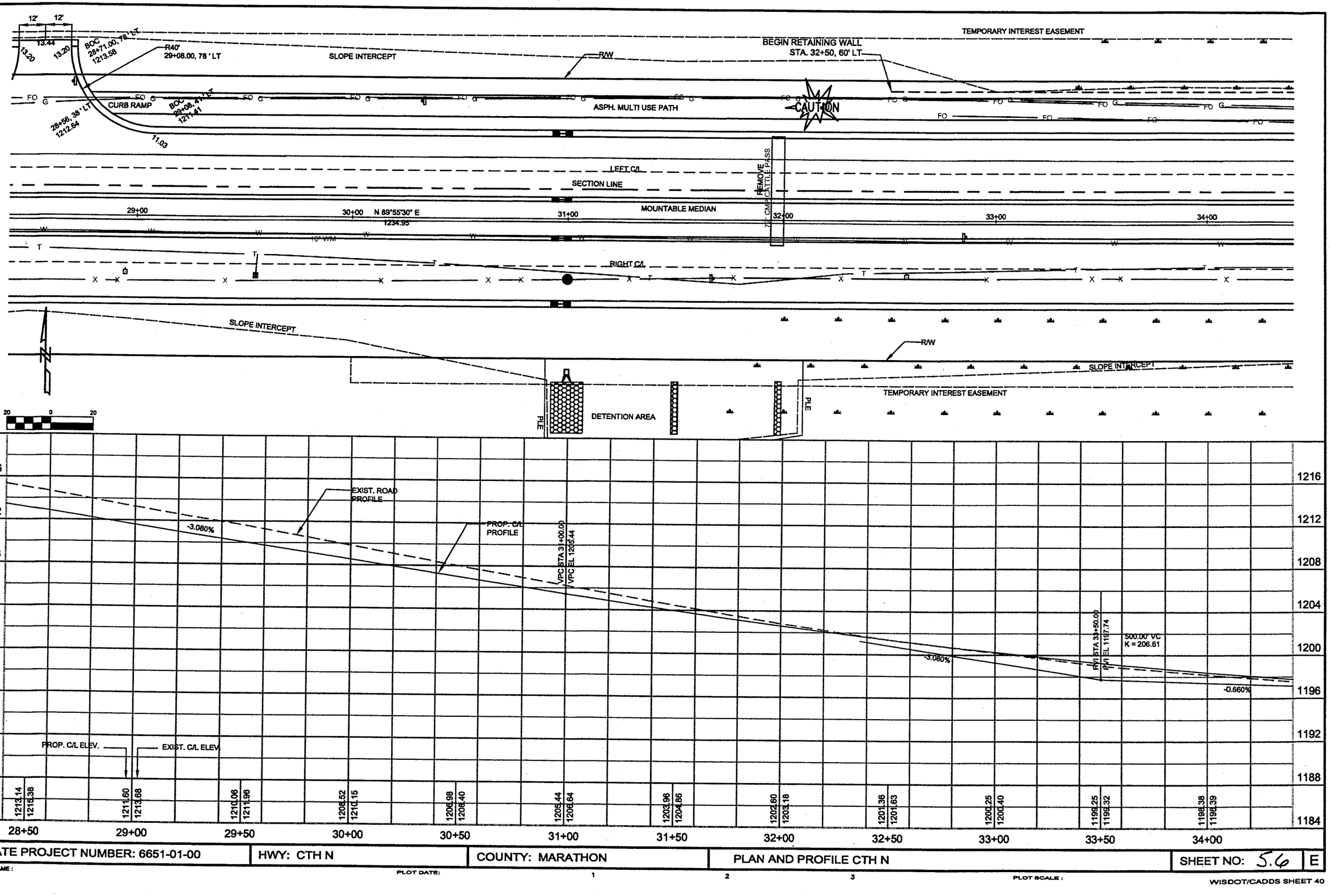

STATE PROJECT NUMBER: 6651-01-00	HWY: CTH N	COUNTY: MARATHON	PLAN AND PROFILE CTH N	SHEET NO: 5.6	E

FILE NAME : PLOT DATE: 1 2 3 PLOT SCALE :

WISDOT/CADDS SHEET 40

P:\DRAFT\28940100 CTH N West Arterial\topo survey\RCp06001.dwg, Layout1, 02/26/2004 07:21:11 AM

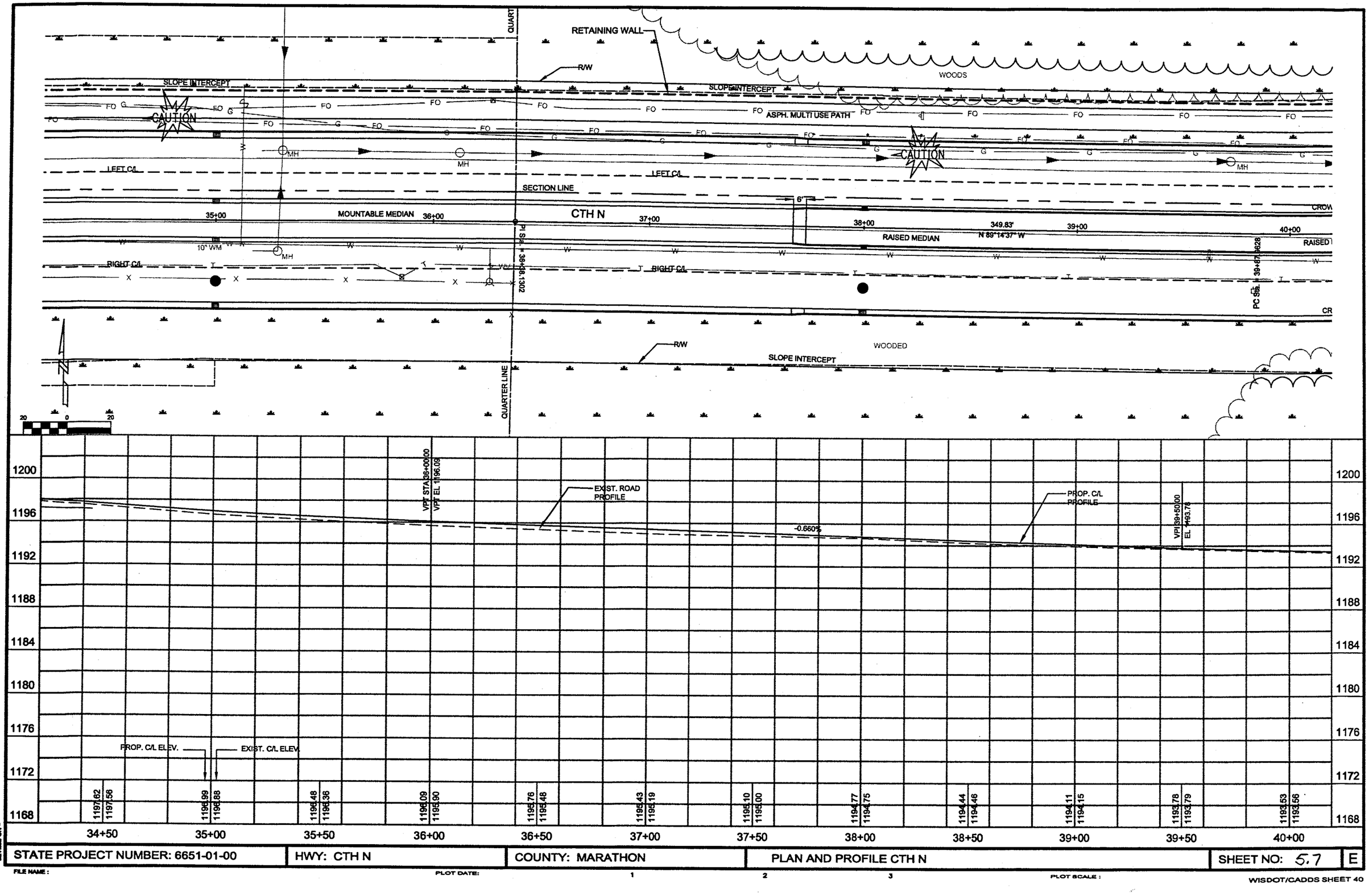

P:\DRAFT\28940100 CTH N West Arterial\topo survey\RCp07001.dwg, Layout1, 12/05/2003 08:18:59 AM

LEVELS ON =

STATE PROJECT NUMBER: 6651-01-00	HWY: CTH N	COUNTY: MARATHON	PLAN AND PROFILE CTH N	SHEET NO: 5.7	E

FILE NAME : PLOT DATE: 1 2 3 PLOT SCALE :

WISDOT/CADDS SHEET 40

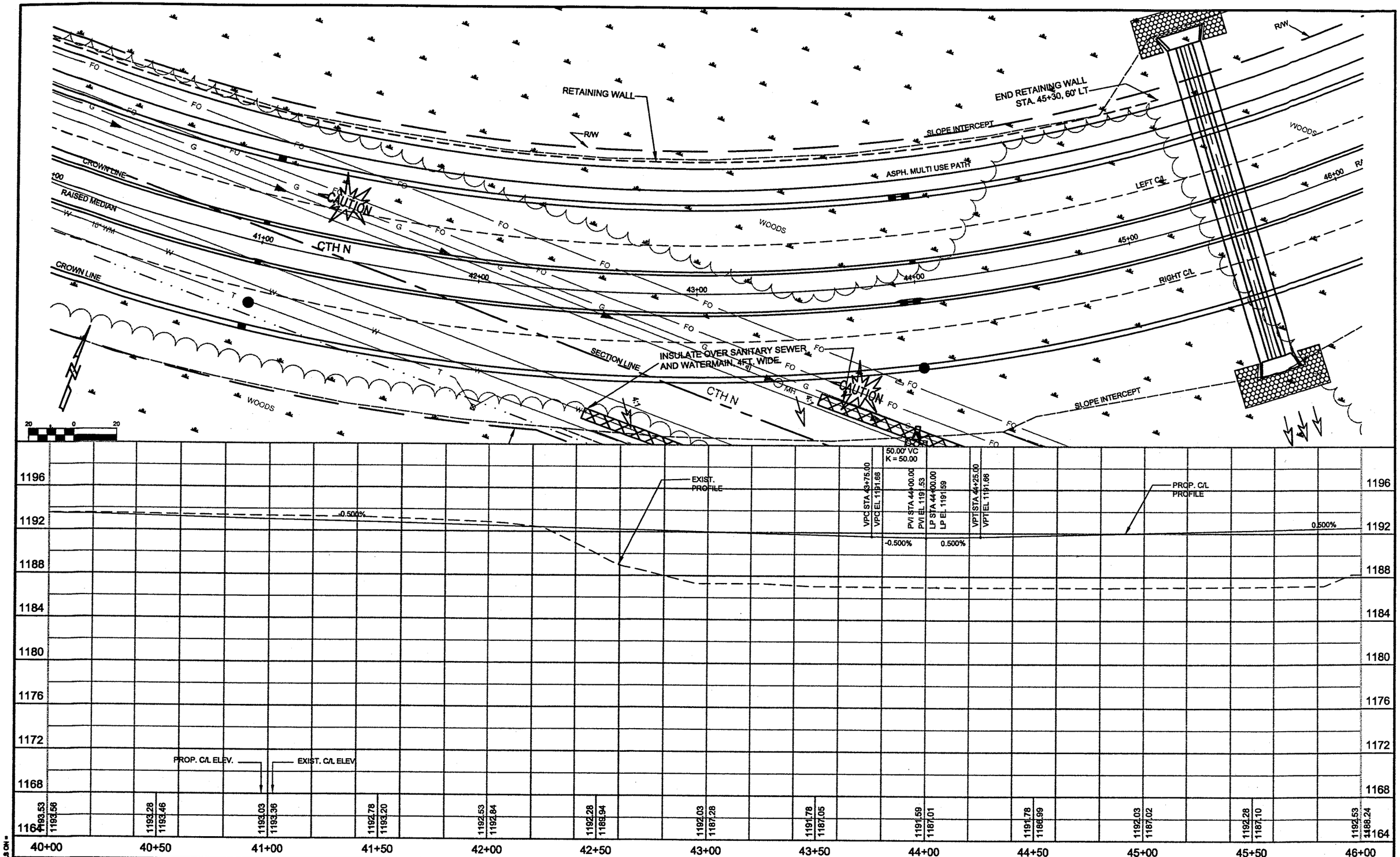

STATE PROJECT NUMBER: 6651-01-00	HWY: CTH N	COUNTY: MARATHON	PLAN AND PROFILE CTH N	SHEET NO: 5.8	E

FILE NAME : PLOT DATE: 1 2 3 PLOT SCALE :

WISDOT/CADDS SHEET 40

LEVELS ON =

P:\DRAFT\28940100 CTH N West Arterial\topo survey\RCp08001.dwg, Layout1, 02/26/2004 07:26:16 AM

DRAINAGE BASIN

SLOPE INTERCEPT

R/W

CURB RAMP

ASPH. MULTI USE PATH

WOODS

CTH N

POT Sta. 47+11.5519 = BOP Sta. 0+00.00 C

46+00 RAISED MEDIAN

25'

8'

LEFT C/L

47+00

17'

48+00

49+00

50+00

51+00

4'

RAISED MEDIAN

RIGHT C/L

CLOVER RD

SLOPE INTERCEPT

CURB RAMP

46+43.96, 98' RT

47+69.95, 78' RT

20 0 20

1196
1192
1188
1184
1180
1176
1172
1168
1164

500%

VPC STA 46+25.00
VPC EL 1192.86

0.500%

PVI STA 47+00.00
PVI EL 1193.03
#P STA 47+00.00
#P EL 1192.84

-0.500%

VPT STA 47+25.00
VPT EL 1192.46

150.00' VC
K = 150.00

EXIST. PROFILE

PROP. C/L PROFILE

-0.500%

VPC STA 50+75.00
VPC EL 1191.16

50.00' VC
K = 50.00

PVI STA 51+00.00
PVI EL 1191.03

-0.500%

0.500%

LP STA 51+00.00
LP EL 1191.09

VPT STA 51+25.00
VPT EL 1191.16

0.500%

PROP. C/L ELEV. — EXIST. C/L ELEV.

46+00	46+50	47+00	47+50	48+00	48+50	49+00	49+50	50+00	50+50	51+00	51+50
1192.53	1192.76	1192.84	1192.76	1192.53	1192.28	1192.03	1191.78	1191.53	1191.28	1191.09	1191.28
1188.24	1188.60	1189.67	1190.30	1190.19	1188.15	1188.93	1189.69	1190.30	1190.39	1190.38	1190.22

STATE PROJECT NUMBER: 6651-01-00	HWY: CTH N	COUNTY: MARATHON	PLAN AND PROFILE CTH N	SHEET NO: 5.9	E

P:\DRAFT\26940100 CTH N West Arterial\topo survey\RCp09001.dwg, Layout1, 12/05/2003 08:41:51 AM

LEVELS ON =

FILE NAME :

PLOT DATE:

1 2 3

PLOT SCALE :

WISDOT/CADDS SHEET 40

DRAINAGE BASIN

SLOPE INTERCEPT

R/W

LEFT C/L

RIGHT C/L

52+00

53+00

54+00

55+00

PT Sta. = 52+48.1945

ASPH. RAISED MEDIAN

GRASS RAISED MEDIAN

SLOPE INTERCEPT

DRAINAGE BASIN

SLOPE INTERCEPT

R/W

ASPH. MULTI USE PATH

LEFT C/L

CROWN LINE

CTH N

56+00

837.09'

57+00

CROWN LINE

RIGHT C/L

CAUTION

G

S

GR PE

SLOPE INTERCEPT

OBLITERATE

STEEL PLATE BEAM GUARD

20 0 20

PROP. C/L PROFILE

EXIST. PROFILE

VPC STA 54+25.00
VPC EL 1192.85

HP STA 54+98.53
HP EL 1192.84

PVI STA 55+00.00
PVI EL 1193.03

VPT STA 55+75.00
VPT EL 1192.64

0.500%

0.500%

-0.520%

-0.520%

150.00' VC
K = 147.06

1196
1192
1188
1184
1180
1176
1172
1168
1164

PROP. C/L ELEV.

EXIST. C/L ELEV.

52+00	52+50	53+00	53+50	54+00	54+50	55+00	55+50	56+00	56+50	57+00	57+50
1194.53	1194.78	1192.03	1192.28	1192.53	1192.76	1192.84	1192.75	1192.51	1192.25	1191.99	1191.73
1190.04	1190.39	1190.54	1190.90	1191.01	1191.39	1192.79	1191.85	1191.87	1191.21	1189.98	1189.60

STATE PROJECT NUMBER: 6651-01-00	HWY: CTH N	COUNTY: MARATHON	PLAN AND PROFILE CTH N	SHEET NO: 5,10	E

P:\DRAFT\26940100 CTH N West Arterial\topo survey\RCp10001.dwg, Layout1, 12/05/2003 08:46:25 AM

LEVELS ON =

FILE NAME : PLOT DATE: 1 2 3 PLOT SCALE :

WISDOT/CADDS SHEET 40

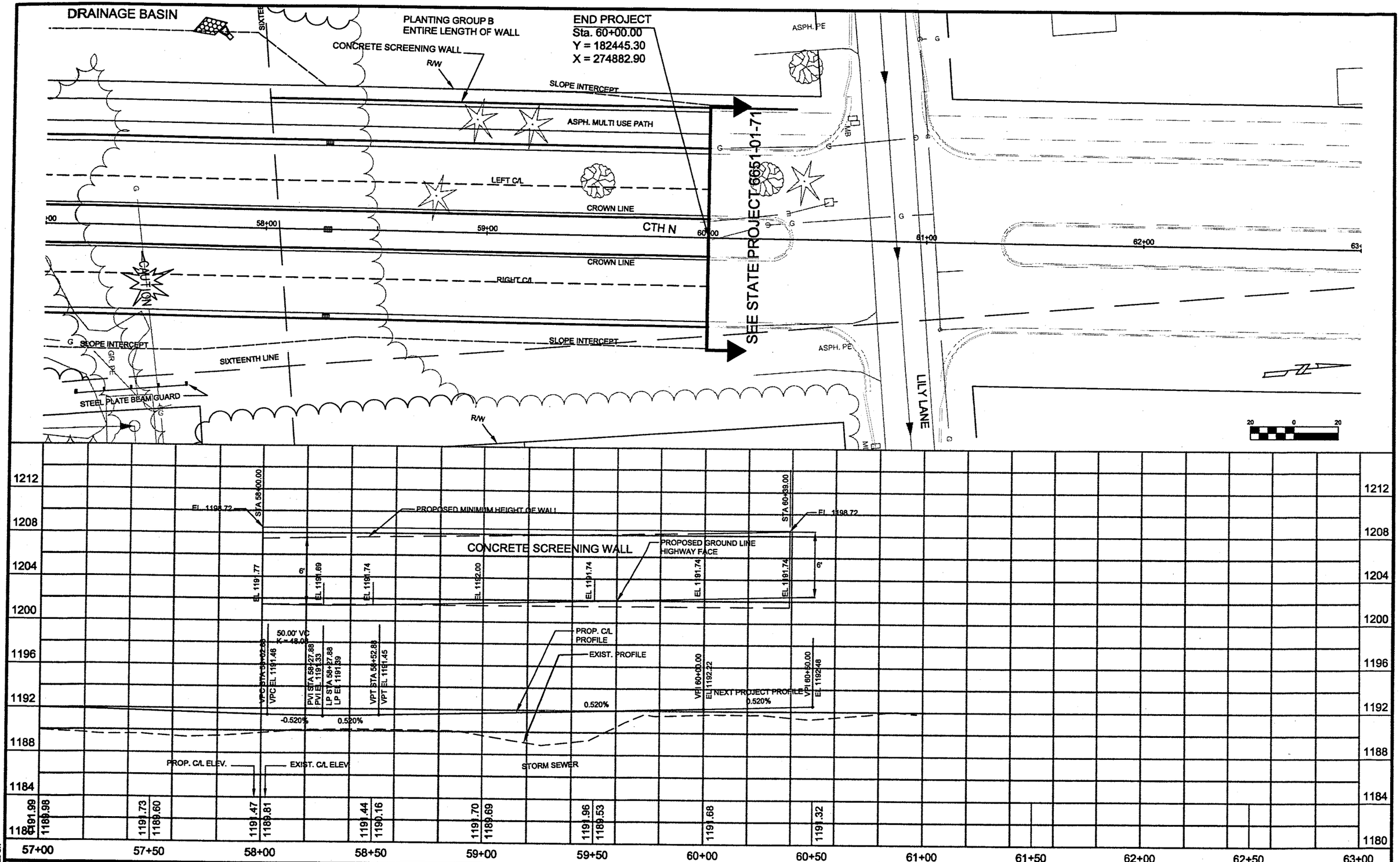

STATE PROJECT NUMBER: 6651-01-00	HWY: CTH N	COUNTY: MARATHON	PLAN AND PROFILE CTH N	SHEET NO: 5.11	E

FILE NAME : PLOT DATE: 1 2 3 PLOT SCALE :

WISDOT/CADDS SHEET 40

P:\DRAFT\28940100 CTH N West Arterial\topo survey\RCp21001.dwg, Layout1, 12/05/2003 08:49:43 AM

LEVELS ON =

P:\DRAFT\28940100 CTH N West Arterial\topo survey\RCp01002.dwg, Layout1, 02/27/2004 11:55:28 AM

20 0 20

BEGIN CONSTRUCTION
Sta. 10+00.00 KK
MILL BUTT JOINT FOR OVERLAY

SLOPE INTERCEPT

13'
15'

CTH KK

11+00 KK | 12+00 KK | 13+00 KK | 14+00 KK | 15+00 KK

EX. PE

EX. PE

SECTION LINE / C/L

N 00°17'45" E
1000.00'

SLOPE INTERCEPT

28'

SLOPE INTERCEPT 210'

SLOPE INTERCEPT

BEGIN CURB & GUTTER
STA 12+10.31' RT

TI

TI

TI

SIXTEENTH LINE

1300
1296
1292
1288
1284
1280
1276
1272
1268

VPI 10+00.00
EL 1291.87

EXIST. C/L PROFILE

PROP. C/L ELEV.

EXIST. C/L ELEV.

9+50	10+00	10+50	11+00	11+50	12+00	12+50	13+00	13+50	14+00	14+50	15+00	15+50
	1291.87	1292.01	1291.88	1291.55	1290.95	1290.15	1289.02	1287.77	1286.23	1284.60	1282.75	1280.81
	1291.87	1292.01	1291.88	1291.55	1290.95	1290.15	1289.02	1287.77	1286.23	1284.60	1282.75	1280.81

LEVELS ON =

STATE PROJECT NUMBER: 6651-01-00	HWY: CTH N	COUNTY: MARATHON	PLAN AND PROFILE CTH KK	SHEET NO: 5, 12	E

FILE NAME :

PLOT DATE:

1 2 3

PLOT SCALE :

WISDOT/CADDS SHEET 40

20 0 20

EX. PE

SLOPE INTERCEPT

CTH KK

16+00 KK | 17+00 KK | 18+00 KK | 19+00 KK | 20+00 KK | 21+00 KK

SECTION LINE
2633.87'
S 00°17'45" W

MILL EXISTING PAVEMENT
REGRADE AND PAVE

LANE EXTENSION

REMOVE

EX. PE

TI

ASPH FLUME
WITH CURB CUT
& MEDIUM RIP RAP

SLOPE INTERCEPT

MILL EXISTING PAVEMENT
REGRADE AND PAVE

LANE EXTENSION

EX. PE

TI

EXIST. C/L PROFILE

PROP. C/L ELEV.

EXIST. C/L ELEV.

EXIS

VPI 21+50.00

	15+50	16+00	16+50	17+00	17+50	18+00	18+50	19+00	19+50	20+00	20+50	21+00	21+50
PROP. C/L ELEV.		1278.71	1276.62	1274.56	1272.50	1270.38	1268.25	1266.07	1263.90	1261.73	1259.53	1257.33	1255.18
EXIST. C/L ELEV.	1280.81	1278.71	1276.62	1274.56	1272.50	1270.38	1268.25	1266.07	1263.90	1261.73	1259.53	1257.35	1255.18

1284 | 1280 | 1276 | 1272 | 1268 | 1264 | 1260 | 1256 | 1252

LEVELS ON =

STATE PROJECT NUMBER: 6651-01-00	HWY: CTH N	COUNTY: MARATHON	PLAN AND PROFILE CTH KK	SHEET NO: 5,13	E

FILE NAME : P:\draft\28940100 cth n west arterial\topo survey\RCp02002.dwg, Layout1, 2/20/2004 1:35:32 PM

PLOT DATE: 1 2 3

PLOT SCALE :

WISDOT/CADDS SHEET 40

P:\draft\28940100 cth n west arterial\topo survey\RCp03002.dwg, Layout1, 2/20/2004 1:36:08 PM

20 0 20

TI SLOPE INTERCEPT

DITCHING FLOW DIRECTION

SECTION LINE
00 KK 2633.87'
S 00°17'45" W

EXISTING PAVEMENT
ADE AND PAVE

XTENSION

22+00 KK 23+00 KK 24+00 KK 26+00 KK 27+0

28' 28'

ASPH FLUME
WITH CURB CUT
& MEDIUM RIP RAP

DITCHING FLOW DIRECTION

SLOPE INTERCEPT

24+03.47, 88' LT

CURB RAMP

CONC. MEDIAN, SLOPED NOSE

N 88°44'13" W
382.00'

24" CMP REMOVE

CAUTION

POT Sta 10+00.08 = Sta 25+00 KK

N 89°35'17" E
1403.18'

24+22.83, 68 ' RT

10+64.12, 78' RT
R40'

15' 12' 24' 15'

N 53°50'04" E
115.74'

9+43.27, 78' LT
R40'

25+79.42, 55' LT

SLOPE INTERCEPT

BITTERSWEET ROAD

END CONSTRUCTION
Sta. 26+50.00 KK
SAW CUT REQ'D:

14' 14'

34'

REMOVE AND ABANDON

N 53°50'04" E
100.12'

25+98.29, 75' RT

10+75.64, 98'
R60'

1264 1260 1256 1252 1248 1244 1240 1236 1232

EXIST. C/L PROFILE

VPI 21+50.00
EL 1255.19
MATCH EXISTING

EXIST. C/L PROFILE

-4.704%

VPC STA 23+38.00
VPC EL 1246.34

PROP. C/L PROFILE

LEFT DITCH PROFILE

RIGHT DITCH PROFILE

PVI STA 24+00.00
PVI EL 1243.42

-4.704%

124.00' VC
K = 29.47

-0.500%

VPT STA 24+62.00
VPT EL 1243.11

2.0%

VPI 24+78.00
EL 1243.43

-2.0%

VPI 25+00.00
EL 1242.99

2.0%

VPI 25+22.00
EL 1243.43

-2.0%

VPI 25+38.00
EL 1243.11

0.500%

-0.518%

VPI 25+94.00
EL 1243.39

VPI 26+50.00
EL 1243.10
MATCH EXISTING

EX. 24" CMP

EX. 18" CMP

PROP. C/L ELEV. EXIST. C/L ELEV.

| | | |

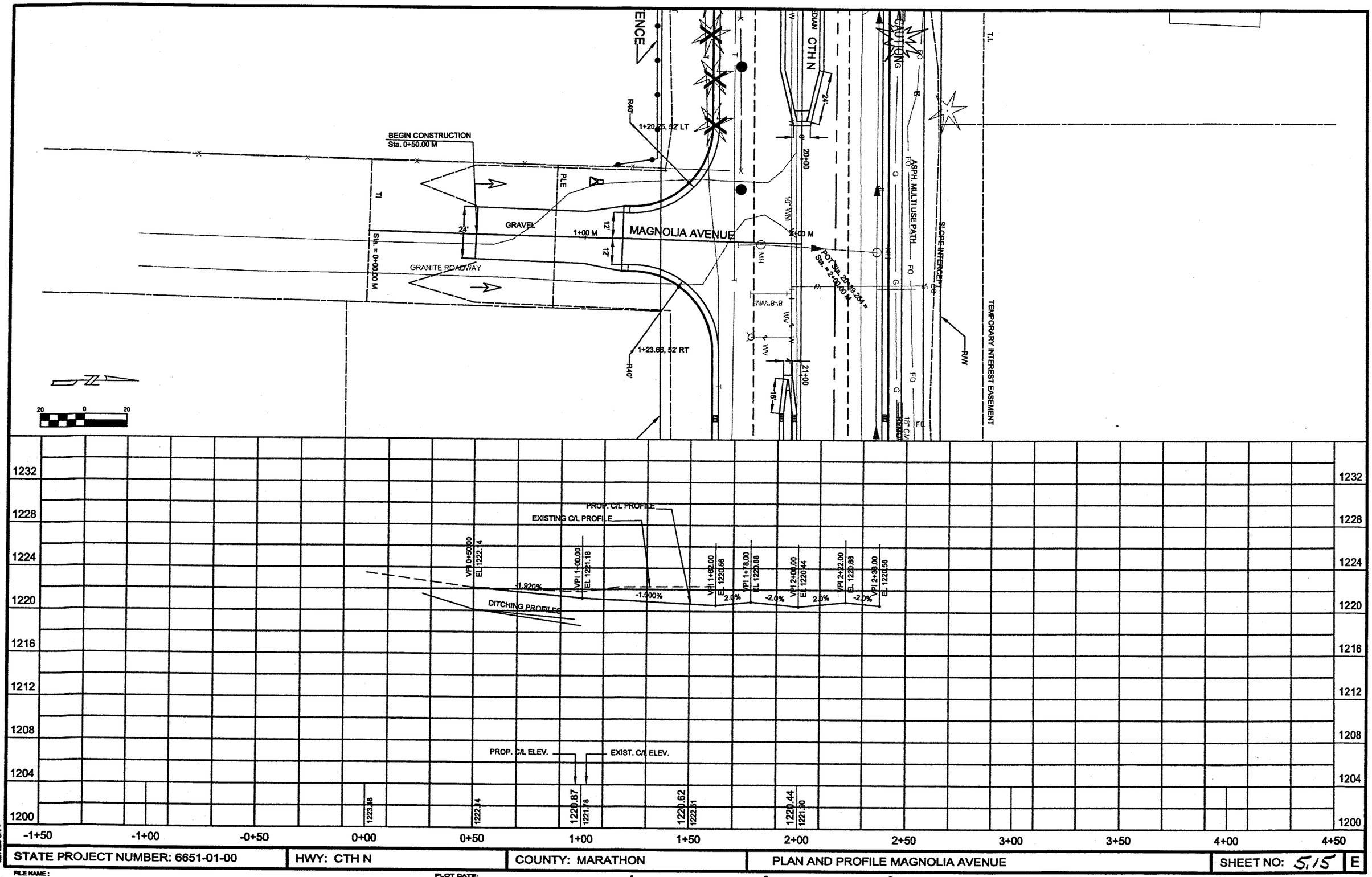

P:\DRAFT\28940100 CTH N West Arterial\topo survey\RCp01003.dwg, Layout1, 12/05/2003 09:20:02 AM

LEVELS ON •

STATE PROJECT NUMBER: 6651-01-00	HWY: CTH N	COUNTY: MARATHON	PLAN AND PROFILE MAGNOLIA AVENUE	SHEET NO: 5,15	E

FILE NAME :

PLOT DATE:

1 2 3

PLOT SCALE :

WISDOT/CADDS SHEET 40

P:\DRAFT\28940100 CTH N West Arterial\topo survey\RCp01005.dwg, Layout1, 10/07/2003 03:09:04 PM

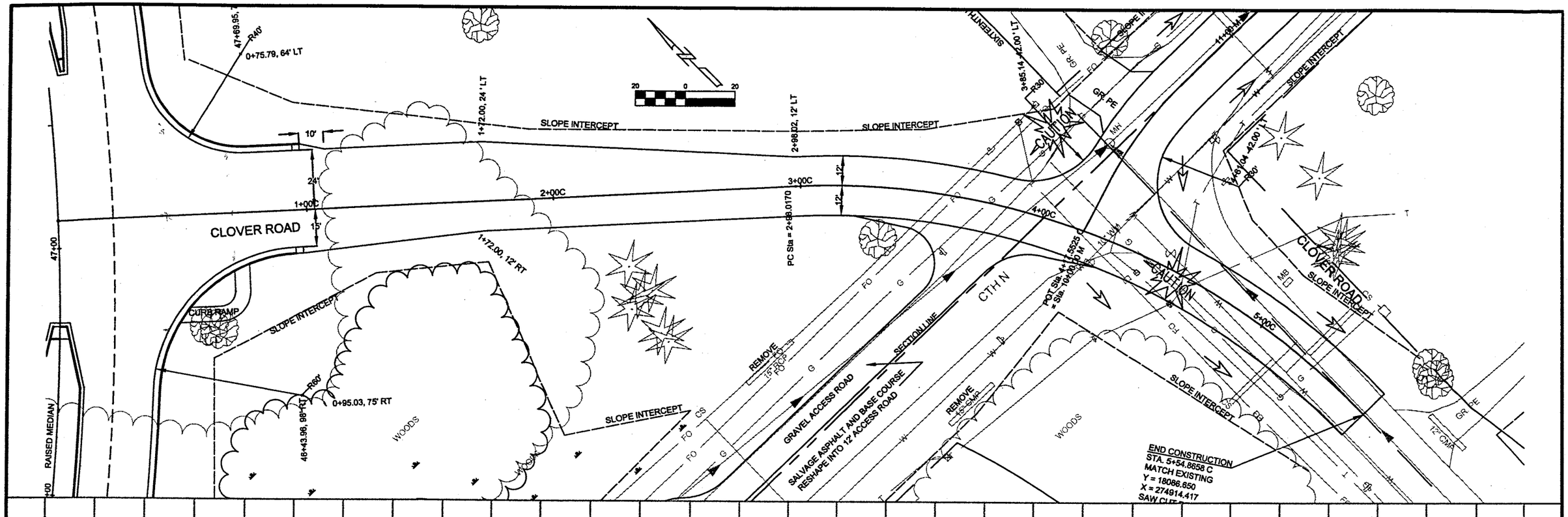

STATE PROJECT NUMBER: 6651-01-00	HWY: CTH N	COUNTY: MARATHON	PLAN AND PROFILE CLOVER ROAD	SHEET NO: 5,16	E

FILE NAME : PLOT DATE: PLOT SCALE :

WISDOT/CADDS SHEET 40

SLOPE INTERCEPT
SIXTEENTH LINE
R30'
GR. PE
SLOPE INTERCEPT
CS
FO
G
CAUTION
GR PE
SOUTH MOUNTAIN ROAD
4+00C
MH
11+00 M
12+00 M
13+00 M
14+00 M
SECTION LINE
15+00 M
SOUTH MOUNTAIN ROAD
CTH N
10" WM
W
T
SLOPE INTERCEPT
SLOPE INTERCEPT
REMOVE 20" CMP
INFILTRATION BASIN
RIB MOUNTAIN DRIVE
R20'
CAUTION
ASPH. PE
CMP
MB
R30'
CAUTION
5+00C
SLOPE INTERCEPT
CLOVER ROAD
SLOPE INTERCEPT
END CONSTRUCTION
Sta. 14+50 M.
Y= 180928.935
X = 275334.076
SAW CUT REQ'D.
N
20 0 20

1196
1192
1188
1184
1180
1176
1172
1168
1164

VPI 9+88.00
EL 1189.44
-2.0%
VPI 10+00.00
EL 1189.68
0.0%
VPI 10+12.00
EL 1189.44
EXISTING C/L PROFILE
PROPOSED C/L PROFILE
-0.647%
DITCH PROFILES
EX. 26"X20" CMP
13+45.42 POT
1186.62EL
-0.847%
VPI 14+50.00
EL 1185.73

PROP. C/L ELEV.
EXIST. C/L ELEV

1189.68
1189.12
1189.44
1189.69
1189.29
1188.27
1189.16
1187.85
1189.35
1187.42
1189.25
1187.00
1187.23
1186.58
1186.74
1186.15
1186.06
1185.73
1185.58
1185.73

9+50 10+00 10+50 11+00 11+50 12+00 12+50 13+00 13+50 14+00 14+50 15+00 15+50

STATE PROJECT NUMBER: 6651-01-00	HWY: CTH N	COUNTY: MARATHON	PLAN AND PROFILE SOUTH MOUNTAIN ROAD	SHEET NO: 5.17 E

FILE NAME : P:\DRAFT\28940100 CTH N West Arterial\topo survey\RCp01006.dwg, Layout1, 12/05/2003 09:49:15 AM
LEVELS ON =
PLOT DATE:
1 2 3
PLOT SCALE :
WISDOT/CADDS SHEET 40

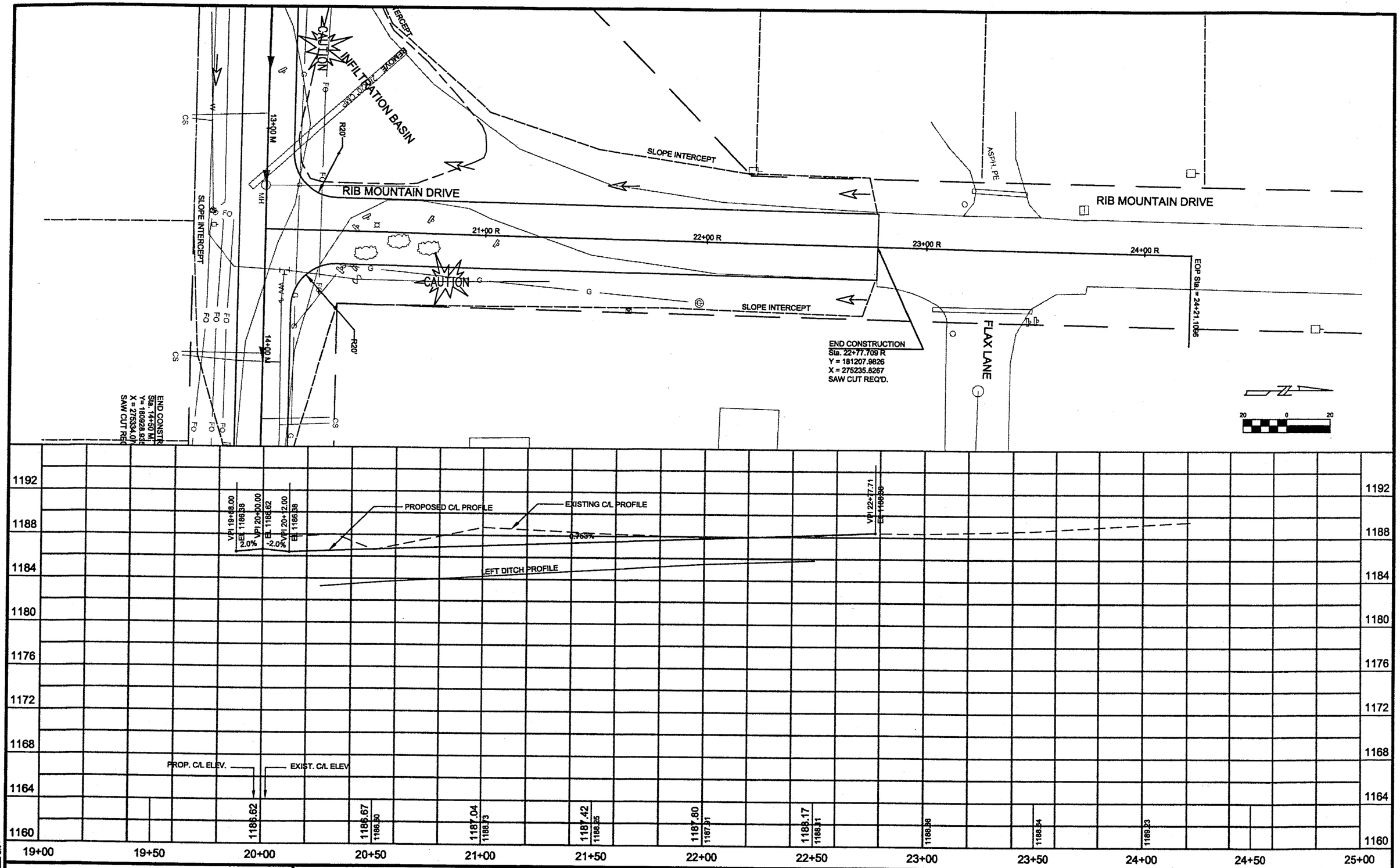

P:\DRAFT\28940100 CTH N West Arterial\topo survey\RCp01007.dwg, Layout1, 12/05/2003 09:46:04 AM
LEVELS ON =

STATE PROJECT NUMBER: 6651-01-00	HWY: CTH N	COUNTY: MARATHON	PLAN AND PROFILE RIB MOUNTAIN DRIVE	SHEET NO: 5.18	E

FILE NAME : PLOT DATE: 1 2 3 PLOT SCALE :

WISDOT/CADDS SHEET 40

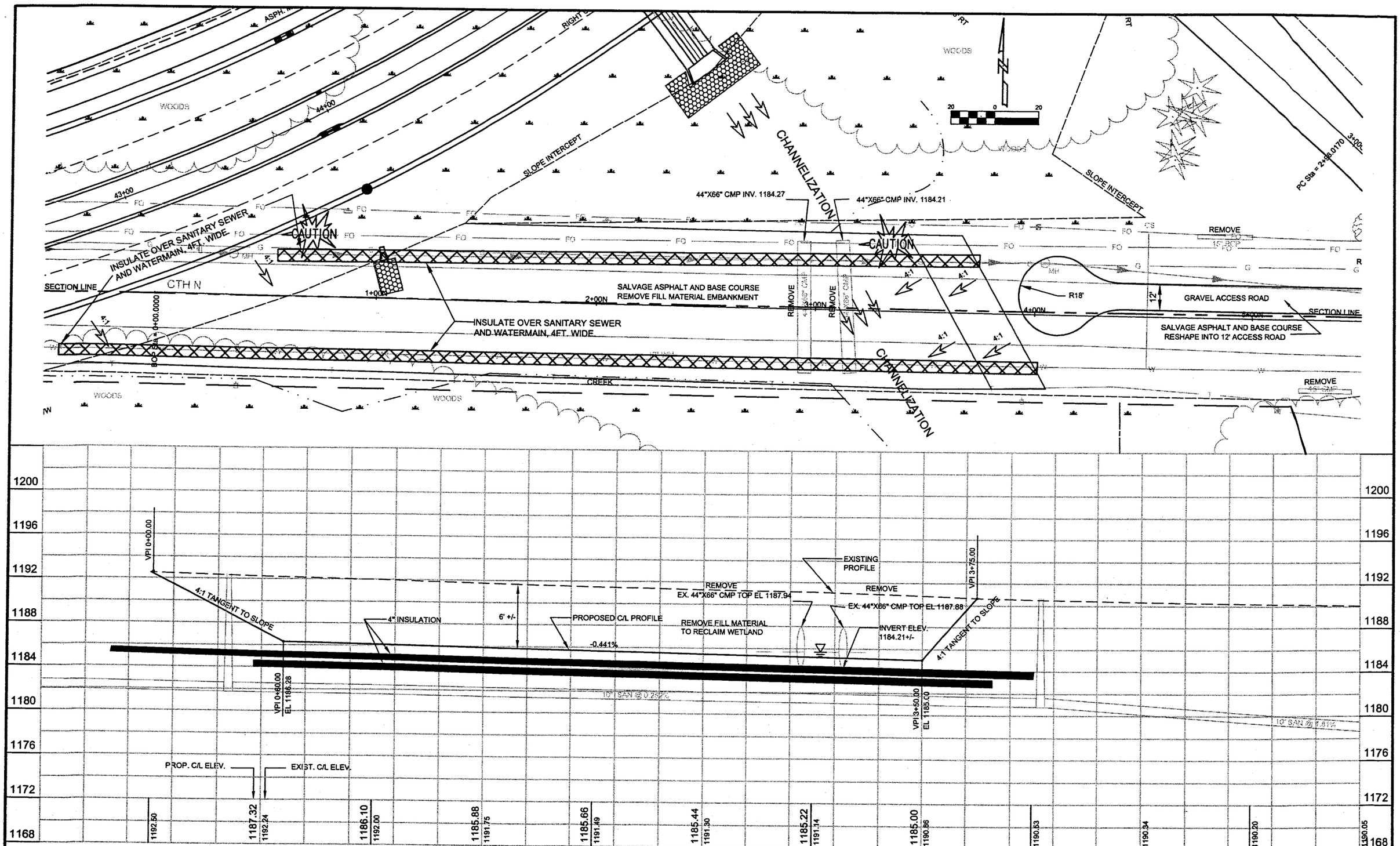

STATE PROJECT NUMBER: 6651-01-00	HWY: CTH N	COUNTY: MARATHON	PLAN AND PROFILE OLD CTH N	SHEET NO: 5.19	E

FILE NAME : PLOT DATE: PLOT SCALE :

WISDOT/CADDS SHEET 40

NOTE:
GRATE IS REVERSIBLE.

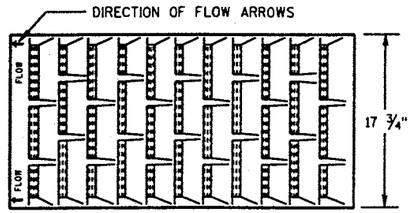

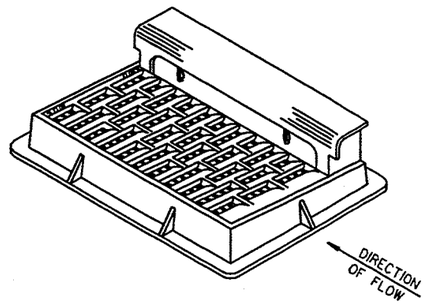

NOTE: CURB BOX HEIGHT ADJUSTABLE 6" TO 9"

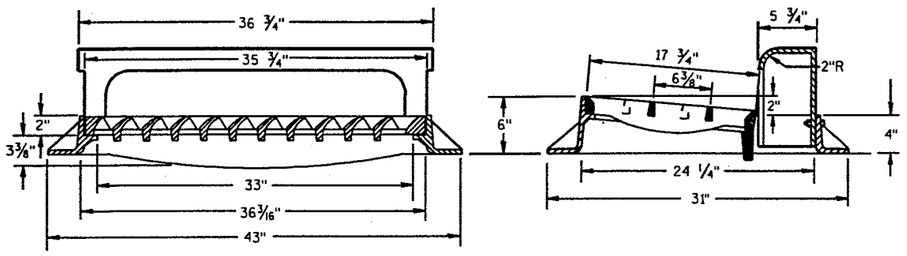

TYPE "H"

(APPROXIMATE WEIGHT 422 LBS.)
FRAME..... 175 LBS.
GRATE..... 138 LBS.
CURB BOX..... 109 LBS.

1 1/8" DIAGONAL BARS WITH 1 5/8" OPENINGS

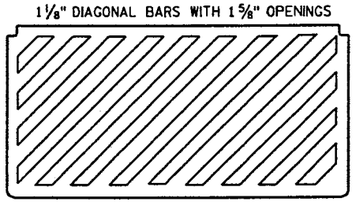

SPECIAL GRATE FOR TYPE "H" COVER

(MEASURES 35 1/4" X 17 3/4" X 2")
(APPROXIMATE WEIGHT 172 LBS.)
GRATE..... 172 LBS.

(NOTED AS TYPE H-S ON DRAINAGE TABLE)

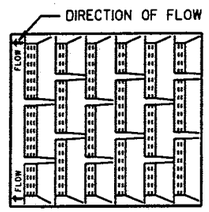

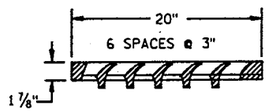

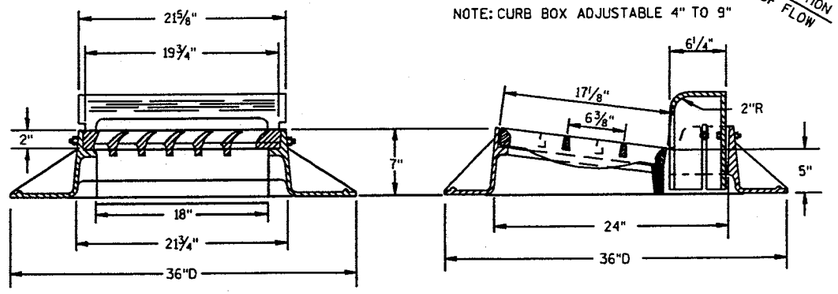

TYPE "A"

(APPROXIMATE WEIGHT 325 LBS.)
FRAME..... 157 LBS.
GRATE..... 84 LBS.
CURB BOX..... 84 LBS.

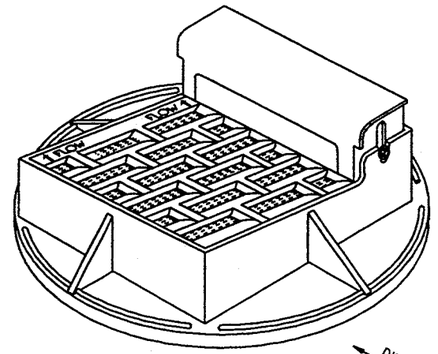

NOTE: CURB BOX ADJUSTABLE 4" TO 9"

NOTE:
GRATE IS REVERSIBLE.

1" DIAGONAL BARS WITH 1 1/2" OPENINGS

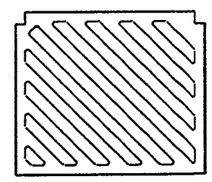

SPECIAL GRATE FOR TYPE "A" COVER

(MEASURES 19 3/4" X 17" X 1 7/8")
GRATE..... 84 LBS.

(NOTED AS TYPE A-S ON DRAINAGE TABLE)

GENERAL NOTES

DETAILS OF CONSTRUCTION, MATERIALS AND WORKMANSHIP NOT SHOWN ON THIS DRAWING SHALL CONFORM TO THE PERTINENT REQUIREMENTS OF THE STANDARD SPECIFICATIONS AND THE APPLICABLE SPECIAL PROVISIONS.

DETAIL DRAWINGS FOR PROPOSED ALTERNATE DESIGNS FOR CATCH BASIN, MANHOLE AND INLET COVERS SHALL BE SUBMITTED TO THE ENGINEER FOR APPROVAL PROVIDING THAT SUCH ALTERNATE DESIGNS MAKE PROVISION FOR EQUIVALENT CAPACITY AND STRENGTH.

ROUND FRAMES AND COVERS SHALL HAVE CONTINUOUSLY MACHINED BEARING SURFACES TO PREVENT ROCKING AND RATTLING.

THE ACTUAL WEIGHT OF COVERS MAY VARY WITHIN 5 PERCENT, PLUS OR MINUS, OF THE APPROXIMATE WEIGHT.

INLET COVERS
TYPE A, H, A-S, & H-S

STATE OF WISCONSIN
DEPARTMENT OF TRANSPORTATION

APPROVED

DATE — CHIEF ROADWAY DEVELOPMENT ENGINEER

FHWA

S.D.D. 8 A 5-16a

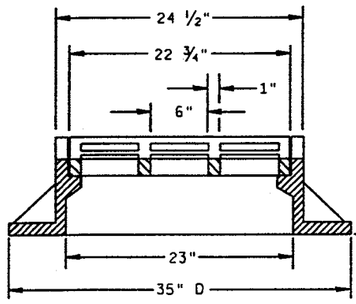

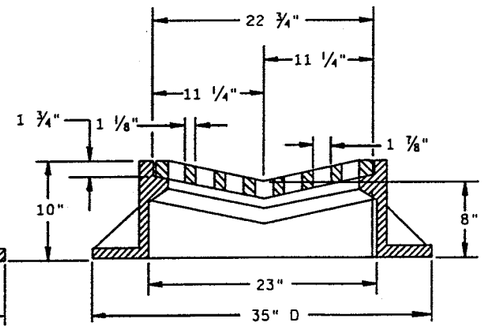

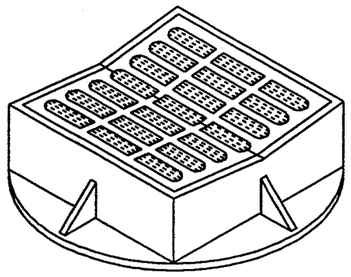

TYPE "B"

(APPROXIMATE WEIGHT 395 LBS.)

FRAME..... 285 LBS.
GRATE..... 110 LBS.

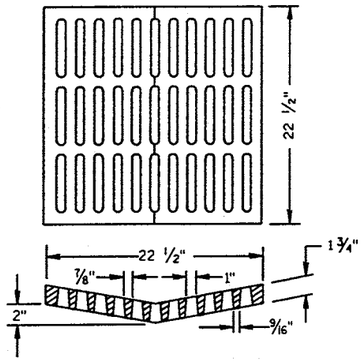

ALTERNATIVE GRATE FOR TYPE "B" COVER

(APPROXIMATE GRATE WEIGHT 125 LBS.)
GRATE.....125 LBS.

USE WHERE PEDESTRIAN OR BICYCLE TRAFFIC IS POSSIBLE.

NOTED AS TYPE B-A ON THE DRAINAGE TABLE

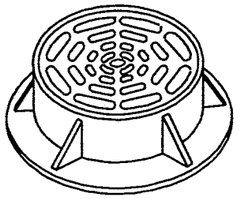

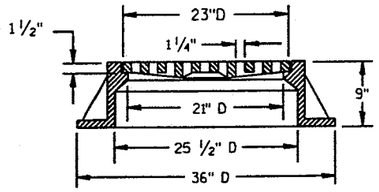

TYPE "C"

(APPROXIMATE WEIGHT 340 LBS.)

FRAME..... 235 LBS.
GRATE..... 105 LBS.

GENERAL NOTES

DETAILS OF CONSTRUCTION, MATERIALS AND WORKMANSHIP NOT SHOWN ON THIS DRAWING SHALL CONFORM TO THE PERTINENT REQUIREMENTS OF THE STANDARD SPECIFICATIONS AND THE APPLICABLE SPECIAL PROVISIONS.

DETAIL DRAWINGS FOR PROPOSED ALTERNATE DESIGNS FOR CATCH BASIN, MANHOLE AND INLET COVERS SHALL BE SUBMITTED TO THE ENGINEER FOR APPROVAL PROVIDING THAT SUCH ALTERNATE DESIGNS MAKE PROVISION FOR EQUIVALENT CAPACITY AND STRENGTH.

ROUND FRAMES AND COVERS SHALL HAVE CONTINUOUSLY MACHINED BEARING SURFACES TO PREVENT ROCKING AND RATTLING.

THE ACTUAL WEIGHT OF COVERS MAY VARY WITHIN 5 PERCENT, PLUS OR MINUS, OF THE APPROXIMATE WEIGHT.

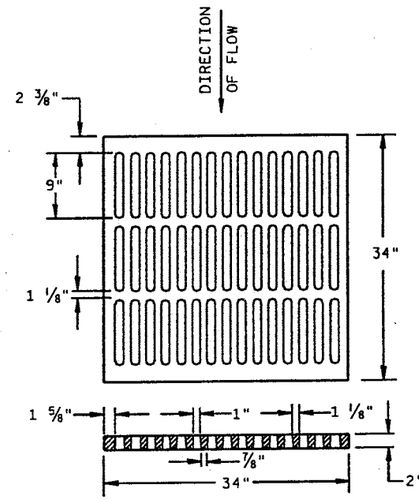

ALTERNATIVE TYPE "MS"

(APPROXIMATE GRATE WEIGHT 365 LBS.)
GRATE.....365 LBS.

USE WHERE PEDESTRIAN OR BICYCLE TRAFFIC IS PERMITTED

NOTED AS TYPE MS-A ON THE DRAINAGE TABLE

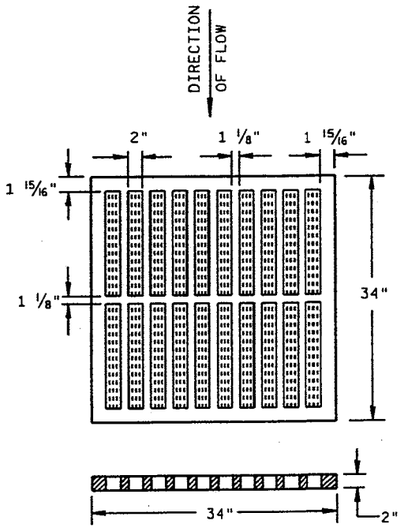

TYPE "MS"

(APPROXIMATE GRATE WEIGHT 270 LBS.)
GRATE.....270 LBS.

USE ON FREEWAYS AND EXPRESSWAYS

NOTED AS TYPE MS ON DRAINAGE TABLE

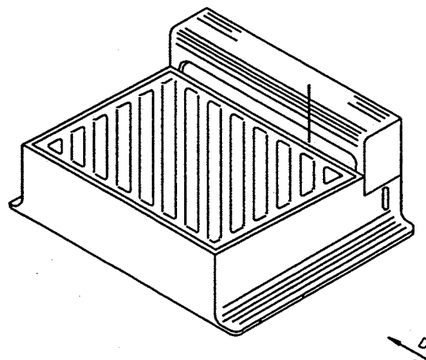

DIAGONAL SLOTS, SHALL BE ORIENTED TO THE DIRECTION OF FLOW AS ILLUSTRATED. GRATES ARE MANUFACTURED TO BE REVERSIBLE.

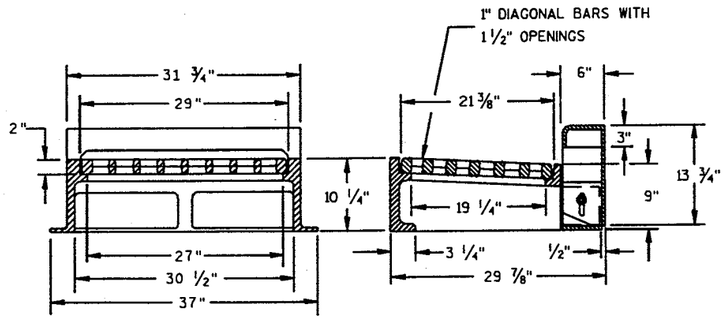

NOTE: CURB BOX HEIGHT ADJUSTABLE 6" TO 9"

TYPE "WM"

(APPROXIMATE WEIGHT 670 LBS.)

FRAME..... 360 LBS.
GRATE..... 160 LBS.
CURB BOX..... 150 LBS.

INLET COVERS
TYPE B, B-A, C, MS, MS-A, & WM

STATE OF WISCONSIN
DEPARTMENT OF TRANSPORTATION

APPROVED

DATE

CHIEF ROADWAY DEVELOPMENT ENGINEER

FHWA

S.D.D. 8 A 5-16b

S.D.D. 8 A 5-16b

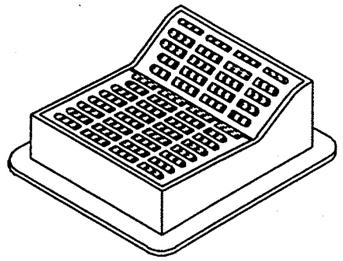

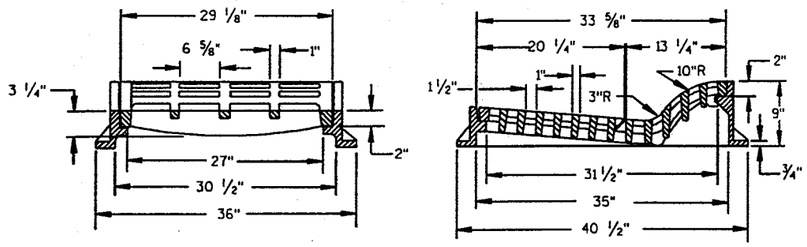

TYPE "F"

(APPROXIMATE WEIGHT 645 LBS.)

FRAME.....300 LBS.
GRATE.....165 LBS.
GRATE.....180 LBS.

USE WITH CONCRETE CURB & GUTTER, 36 INCH.

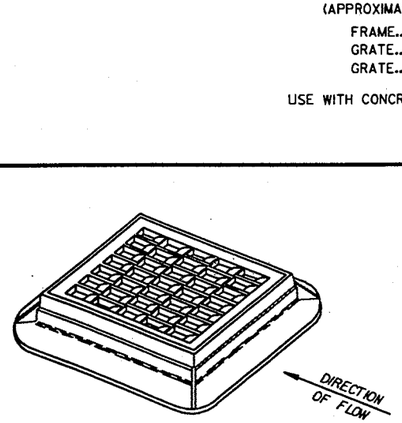

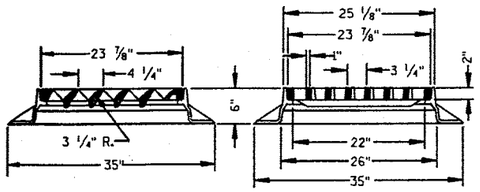

TYPE "S"

(APPROXIMATE WEIGHT 334 LBS.)

FRAME.....165 LBS.
GRATE.....169 LBS.

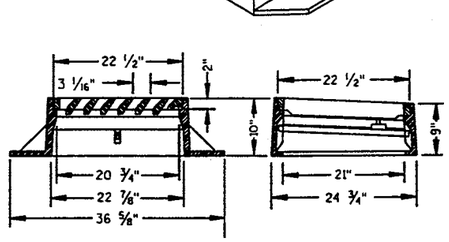

TYPE "V"

(APPROXIMATE WEIGHT 405 LBS.)

FRAME.....270 LBS.
GRATE.....130 LBS.
SAFETY BAR.....5 LBS.

GENERAL NOTES

DETAILS OF CONSTRUCTION, MATERIALS AND WORKMANSHIP NOT SHOWN ON THIS DRAWING SHALL CONFORM TO THE PERTINENT REQUIREMENTS OF THE STANDARD SPECIFICATIONS AND THE APPLICABLE SPECIAL PROVISIONS.

DETAIL DRAWINGS FOR PROPOSED ALTERNATE DESIGNS FOR INLET COVERS SHALL BE SUBMITTED TO THE ENGINEER FOR APPROVAL PROVIDING THAT SUCH ALTERNATE DESIGNS MAKE PROVISION FOR EQUIVALENT CAPACITY AND STRENGTH.

THE ACTUAL WEIGHT OF COVERS MAY VARY WITHIN 5 PERCENT, PLUS OR MINUS, OF THE APPROXIMATE WEIGHT.

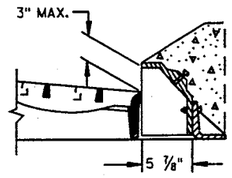

ALTERNATIVE CURB BOX FOR TYPE "HM" COVER

(APPROXIMATE WEIGHT 79 LBS.)

CURB BOX.....79 LBS.

USE WITH TYPES G & J CONCRETE CURB & GUTTER, 30 INCH NOTED AS TYPE HM-GJ ON DRAINAGE TABLE

NOTE:
SPECIAL GRATE FOR THE TYPE "H" COVER MAY ALSO BE USED FOR THE TYPE "HM-GJ" COVER NOTED AS TYPE HM-GJ-S ON DRAINAGE TABLE

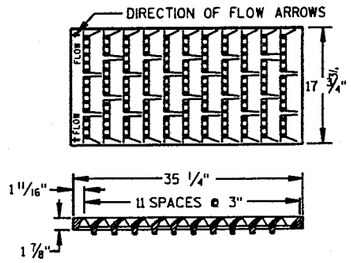

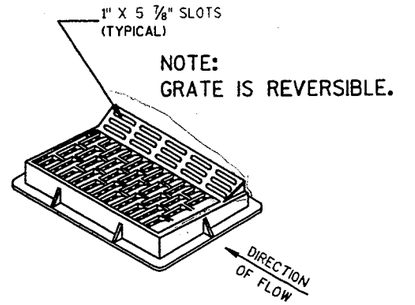

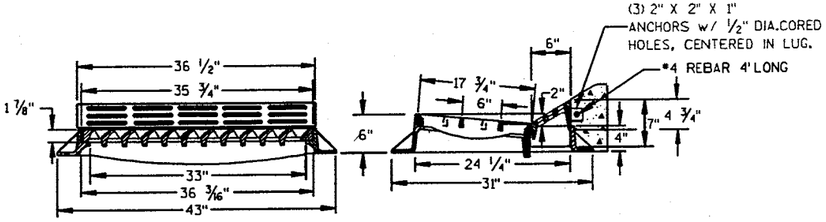

TYPE "HM"

(APPROXIMATE WEIGHT 375 LBS.)

FRAME.....175 LBS.
GRATE.....138 LBS.
CURB BOX.....62 LBS.

USE WITH CONCRETE CURB & GUTTER, 36 INCH.

NOTE:
SPECIAL GRATE FOR THE TYPE "H" COVER MAY ALSO BE USED FOR THE TYPE "HM" COVER NOTED AS TYPE HM-S ON DRAINAGE TABLE

INLET COVERS
TYPE F, HM, HM-S, S, V, HM-GJ, & HM-GJ-S

STATE OF WISCONSIN
DEPARTMENT OF TRANSPORTATION

APPROVED

DATE — CHIEF ROADWAY DEVELOPMENT ENGINEER

FHWA

S.D.D. 8 A 5-16c

S.D.D. 8 A 5-16c

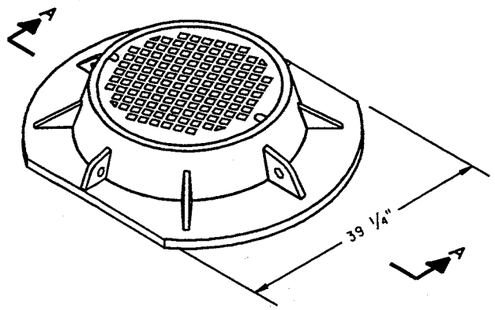

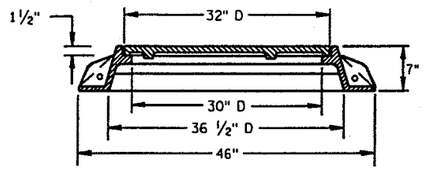

SECTION A-A

TYPE "K"

(APPROXIMATE WEIGHT 415 LBS.)

FRAME.....210 LBS.
LID.....205 LBS.

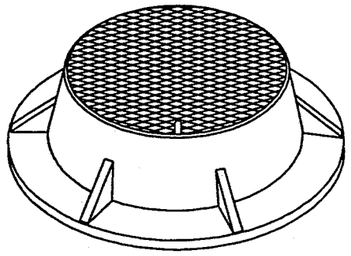

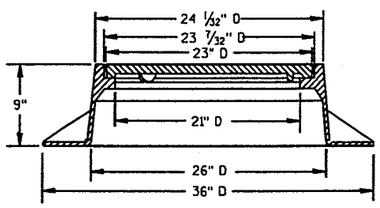

TYPE "J"

(APPROXIMATE WEIGHT 250 LBS.)

FRAME.....135 LBS.
LID.....115 LBS.

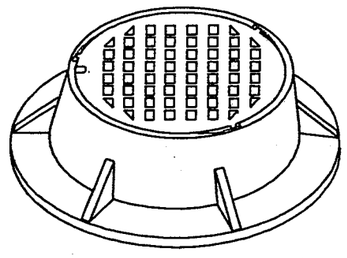

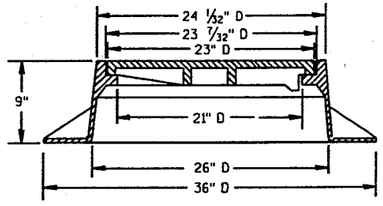

TYPE "J" SPECIAL

TYPE "B" NON-ROCKING SELF-SEAL LID

(APPROXIMATE WEIGHT 245 LBS.)

FRAME.....145 LBS.
LID.....100 LBS.

(NOTED AS TYPE J-S ON THE DRAINAGE TABLE)

GENERAL NOTES

DETAILS OF CONSTRUCTION, MATERIALS AND WORKMANSHIP NOT SHOWN ON THIS DRAWING SHALL CONFORM TO THE PERTINENT REQUIREMENTS OF THE STANDARD SPECIFICATIONS AND THE APPLICABLE SPECIAL PROVISIONS.

DETAIL DRAWINGS FOR PROPOSED ALTERNATE DESIGNS FOR MANHOLE COVERS SHALL BE SUBMITTED TO THE ENGINEER FOR APPROVAL PROVIDING THAT SUCH ALTERNATE DESIGNS MAKE PROVISION FOR EQUIVALENT CAPACITY AND STRENGTH.

ROUND FRAMES AND COVERS SHALL HAVE CONTINUOUSLY MACHINED BEARING SURFACES TO PREVENT ROCKING AND RATTLING.

THE ACTUAL WEIGHT OF COVERS MAY VARY WITHIN 5 PERCENT, PLUS OR MINUS, OF THE APPROXIMATE WEIGHT.

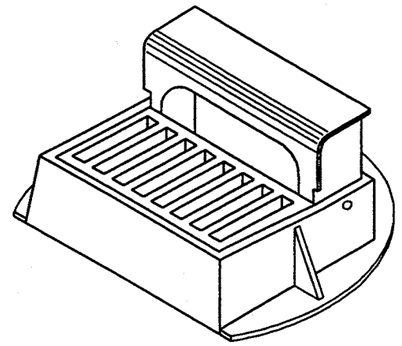

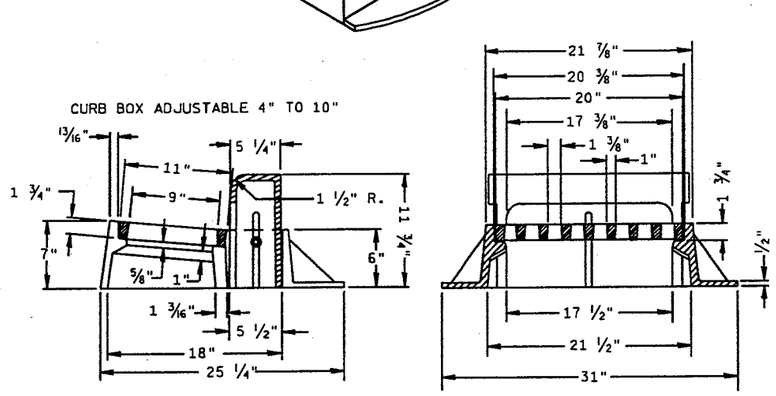

INLET COVER TYPE "Z"

(APPROXIMATE WEIGHT 340 LBS.)

FRAME.....198 LBS.
GRATE..... 50 LBS.
CURB BOX..... 92 LBS.

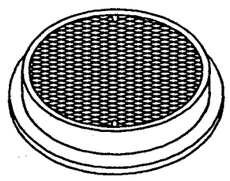

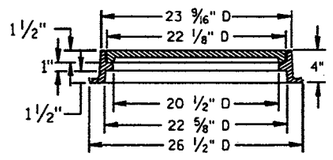

TYPE "L"

(APPROXIMATE WEIGHT 145 LBS.)

FRAME.....75*
LID.....70*

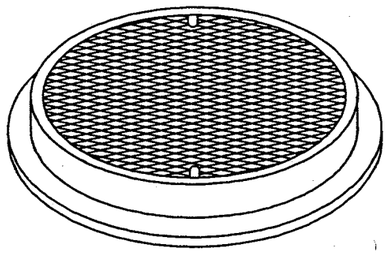

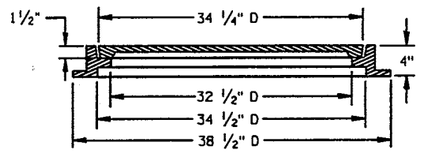

TYPE "M"

(APPROXIMATE WEIGHT 385 LBS.)

FRAME..... 125*
LID..... 260*

INLET COVER, TYPE Z
MANHOLE COVERS, TYPE
K, J, J-S, L & M

STATE OF WISCONSIN
DEPARTMENT OF TRANSPORTATION

APPROVED

DATE

CHIEF ROADWAY DEVELOPMENT ENGINEER

FHWA

S.D.D. 8 A 5-16d

S.D.D. 8 A 5-16d

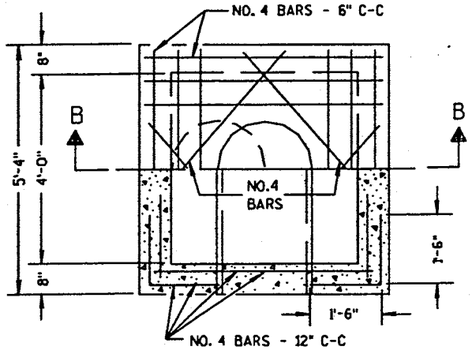

HALF SECTION A-A

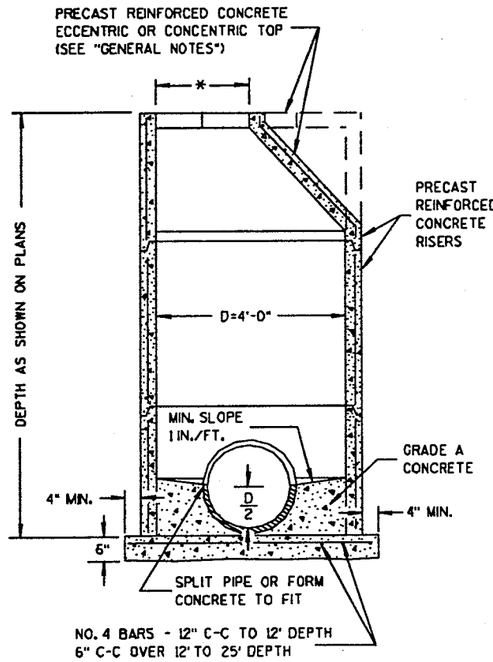

PRECAST REINFORCED CONCRETE

GENERAL NOTES

DETAILS OF CONSTRUCTION, MATERIALS AND WORKMANSHIP NOT SHOWN ON THIS DRAWING SHALL CONFORM TO THE PERTINENT REQUIREMENTS OF THE STANDARD SPECIFICATIONS AND THE APPLICABLE SPECIAL PROVISIONS.

DETAILED DRAWINGS FOR PROPOSED ALTERNATE DESIGNS FOR UNDERGROUND DRAINAGE STRUCTURES SHALL BE SUBMITTED TO THE ENGINEER FOR APPROVAL PROVIDING THAT SUCH ALTERNATE DESIGNS MAKE PROVISION FOR EQUIVALENT CAPACITY AND STRENGTH.

ALL DRAINAGE STRUCTURES ARE DESIGNATED ON THE PLANS AS "MANHOLES 1-C", "CATCH BASINS 1-B", "INLETS 3-H", ETC. THE FIRST DIGIT DESIGNATES THE MASONRY PORTION OF THE STRUCTURE, AND THE FOLLOWING LETTER DESIGNATES THE TYPE OF COVER TO BE USED TO COMPRISE THE COMPLETE UNIT.

PRECAST REINFORCED BASES SHALL BE PLACED ON A BED OF MATERIAL AT LEAST 6 INCHES IN DEPTH, WHICH MEETS THE REQUIREMENTS OF GRANULAR BACKFILL. THIS BEDDING SHALL BE COMPACTED AND PROVIDE UNIFORM SUPPORT FOR THE ENTIRE AREA OF THE BASE.

PRECAST REINFORCED CONE TOPS (ECCENTRIC OR CONCENTRIC) MAY BE USED ON CONCRETE BLOCK STRUCTURES. THE CONE TOPS SHALL BE INSTALLED ON A BED OF MORTAR.

ECCENTRIC CONE TOPS MAY BE USED ON ALL STRUCTURES, AND CONCENTRIC CONE TOPS SHALL BE USED ONLY ON STRUCTURES 5 FEET OR LESS IN DEPTH, UNLESS OTHERWISE DIRECTED BY THE ENGINEER.

STEPS MEETING THE FOLLOWING REQUIREMENTS SHALL BE INSTALLED IN ALL STRUCTURES OVER 5 FEET IN DEPTH: 16 INCH C-C MAXIMUM SPACING; PROJECT A MINIMUM CLEAR DISTANCE OF 4 INCHES FROM THE WALL AT THE POINT OF EMBEDMENT; MINIMUM LENGTH OF 10 INCHES; MINIMUM WALL EMBEDMENT OF 3 INCHES; AND BE CAPABLE OF SUPPORTING A CONCENTRATED LOAD OF 300 LBS. FERROUS METAL STEPS NOT PAINTED OR TREATED TO RESIST CORROSION SHALL HAVE A MINIMUM CROSS SECTIONAL DIMENSION OF 1 INCH.

SOLID ALUMINUM STEPS SHALL HAVE A MINIMUM CROSS SECTIONAL DIMENSION OF 0.75 INCH. ALUMINUM SURFACES TO BE EMBEDDED IN CONCRETE SHALL BE GIVEN ONE COAT OF SUITABLE QUALITY PAINT, SUCH AS ZINC CHROMATE PRIMER CONFORMING TO FEDERAL SPECIFICATION TT-P-645 OR EQUIVALENT. STEPS OF APPROVED POLYPROPYLENE PLASTIC COATED REINFORCEMENT BAR ARE ACCEPTABLE.

ALL BAR STEEL REINFORCEMENT SHALL BE EMBEDDED 2 INCHES CLEAR UNLESS OTHERWISE SHOWN OR NOTED.

PRECAST REINFORCED CONCRETE RISERS MAY BE PLACED WITH TONGUE UP OR DOWN.

ALL PRECAST INLET UNITS SHALL CONFORM TO THE PERTINENT REQUIREMENTS OF AASHTO DESIGNATION M 199.

* USE 2'-0" DIAMETER OPENING WITH TYPE "C", "L" AND "J" COVERS, OR 3'-0" DIAMETER WITH TYPE "K" AND "M" COVERS.

① 2 COURSES 6" BLOCK.

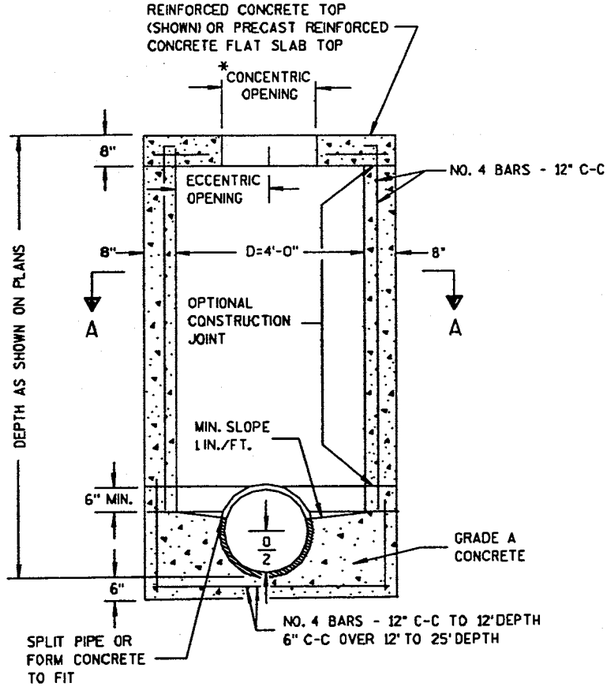

SECTION B-B
REINFORCED CONCRETE

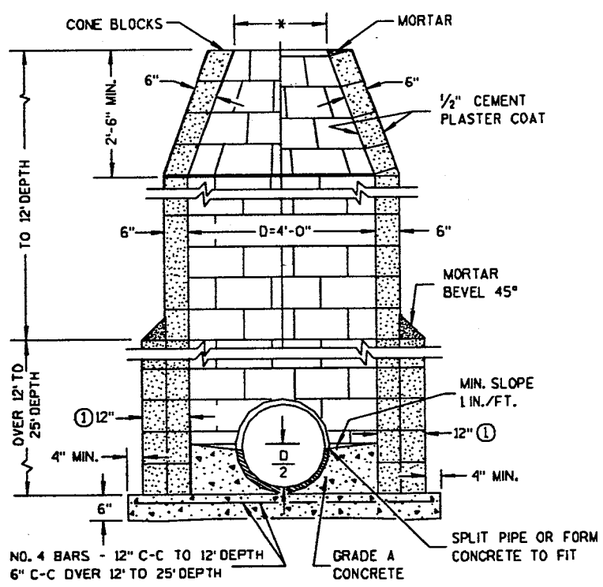

CONCRETE BLOCK

MANHOLES TYPE 1

MANHOLES TYPE 1	
STATE OF WISCONSIN DEPARTMENT OF TRANSPORTATION	
APPROVED	
DATE	STATE DESIGN ENGINEER FOR HWYS
FHWA	

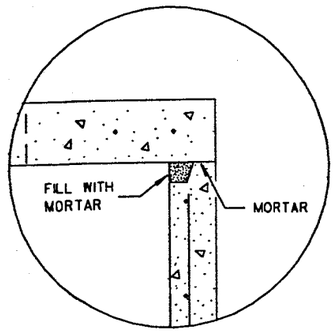

DETAIL "A"

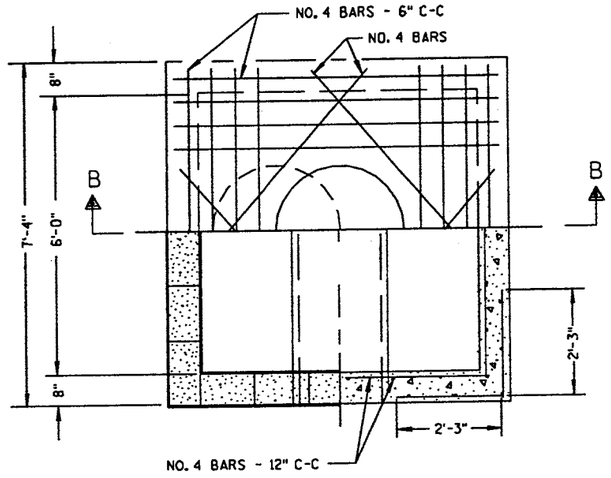

HALF SECTION A-A

GENERAL NOTES

DETAILS OF CONSTRUCTION, MATERIALS AND WORKMANSHIP NOT SHOWN ON THIS DRAWING SHALL CONFORM TO THE PERTINENT REQUIREMENTS OF THE STANDARD SPECIFICATIONS AND THE APPLICABLE SPECIAL PROVISIONS.

DETAILED DRAWINGS FOR PROPOSED ALTERNATE DESIGNS FOR UNDERGROUND DRAINAGE STRUCTURES SHALL BE SUBMITTED TO THE ENGINEER FOR APPROVAL PROVIDING THAT SUCH ALTERNATE DESIGNS MAKE PROVISION FOR EQUIVALENT CAPACITY AND STRENGTH.

ALL DRAINAGE STRUCTURES ARE DESIGNATED ON THE PLANS AS "MANHOLES 1-C", "CATCH BASINS 1-B", "INLETS 3-H", ETC. THE FIRST DIGIT DESIGNATES THE MASONRY PORTION OF THE STRUCTURE, AND THE FOLLOWING LETTER DESIGNATES THE TYPE OF COVER TO BE USED TO COMPRISE THE COMPLETE UNIT.

PRECAST REINFORCED BASES SHALL BE PLACED ON A BED OF MATERIAL AT LEAST 6 INCHES IN DEPTH, WHICH MEETS THE REQUIREMENTS OF GRANULAR BACKFILL. THIS BEDDING SHALL BE COMPACTED AND PROVIDE UNIFORM SUPPORT FOR THE ENTIRE AREA OF THE BASE.

STEPS MEETING THE FOLLOWING REQUIREMENTS SHALL BE INSTALLED IN ALL STRUCTURES OVER 5 FEET IN DEPTH: 16 INCH C-C MAXIMUM SPACING; PROJECT A MINIMUM CLEAR DISTANCE OF 4 INCHES FROM THE WALL AT THE POINT OF EMBEDMENT; MINIMUM LENGTH OF 10 INCHES; MINIMUM WALL EMBEDMENT OF 3 INCHES; AND BE CAPABLE OF SUPPORTING A CONCENTRATED LOAD OF 300 LBS. FERROUS METAL STEPS NOT PAINTED OR TREATED TO RESIST CORROSION SHALL HAVE A MINIMUM CROSS SECTIONAL DIMENSION OF 1 INCH.

SOLID ALUMINUM STEPS SHALL HAVE A MINIMUM CROSS SECTIONAL DIMENSION OF 0.75 INCH. ALUMINUM SURFACES TO BE EMBEDDED IN CONCRETE SHALL BE GIVEN ONE COAT OF SUITABLE QUALITY PAINT, SUCH AS ZINC CHROMATE PRIMER CONFORMING TO FEDERAL SPECIFICATION TT-P-645 OR EQUIVALENT. STEPS OF APPROVED POLYPROPYLENE PLASTIC COATED REINFORCEMENT BAR ARE ACCEPTABLE.

ALL BAR STEEL REINFORCEMENT SHALL BE EMBEDDED 2 INCHES CLEAR UNLESS OTHERWISE SHOWN OR NOTED.

PRECAST REINFORCED CONCRETE RISERS MAY BE PLACED WITH TONGUE UP OR DOWN.

ALL PRECAST INLET UNITS SHALL CONFORM TO THE PERTINENT REQUIREMENTS OF AASHTO DESIGNATION M 199.

* USE 2'-0" DIAMETER OPENING WITH TYPE "C", "L" AND "J" COVERS, OR 3'-0" DIAMETER WITH TYPE "K" AND "M" COVERS.

① 2 COURSES 6" BLOCK.

② WHEN CONNECTING PIPES ARE 24" OR LARGER THE PRECAST MANHOLES MAY BE INCREASED TO 42" DIAMETER.

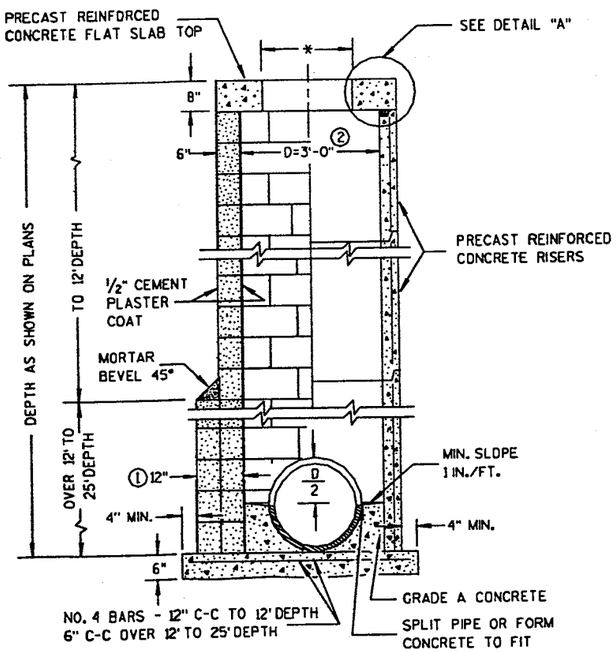

CONCRETE BLOCK ② PRECAST REINFORCED CONCRETE

MANHOLES TYPE 2

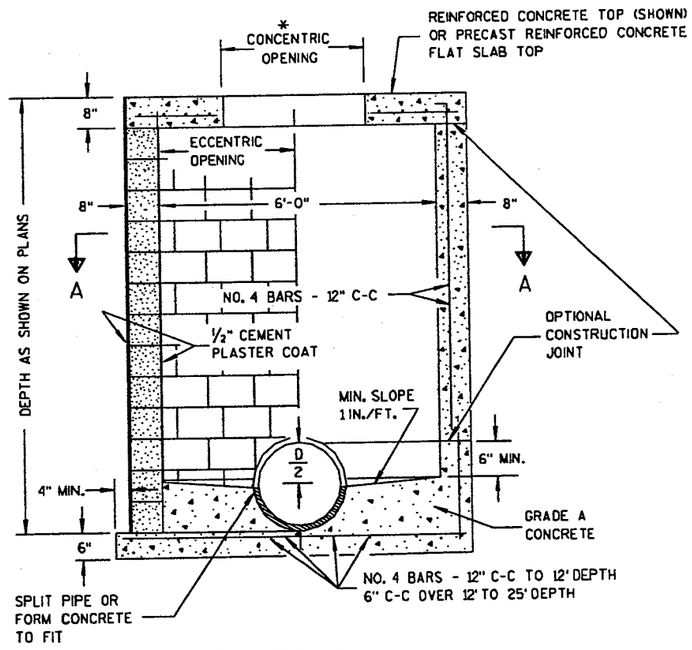

SECTION B-B

CONCRETE BLOCK REINFORCED CONCRETE

MANHOLES TYPE 3

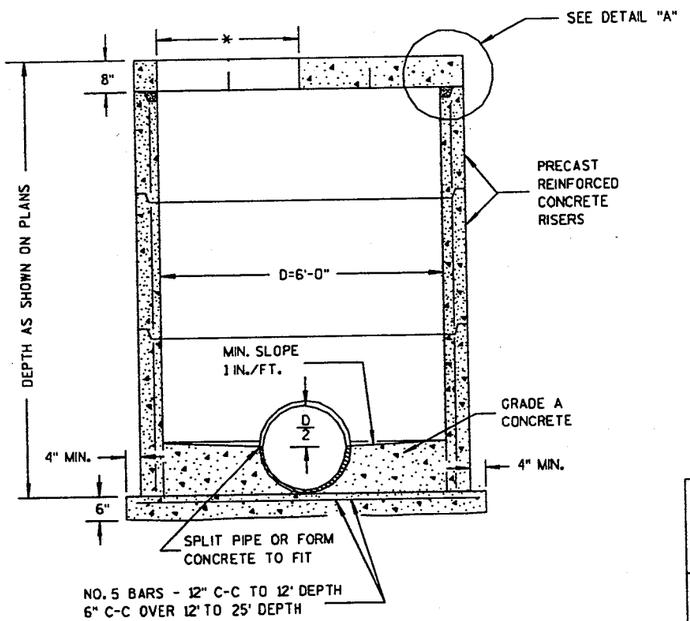

PRECAST REINFORCED CONCRETE

MANHOLES TYPE 2 & 3

STATE OF WISCONSIN
DEPARTMENT OF TRANSPORTATION

APPROVED

DATE

STATE DESIGN ENGINEER FOR HWYS

FHWA

S.D.D. 8 B 7-3

S.D.D. 8 B 7-3

*SELECTION OF SQUARE OR CIRCULAR DESIGN WILL BE BASED ON THE PIPE SIZES AND THE INLET COVER BEING UTILIZED

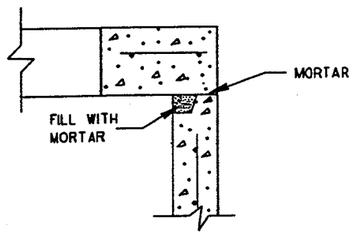

DETAIL "A"

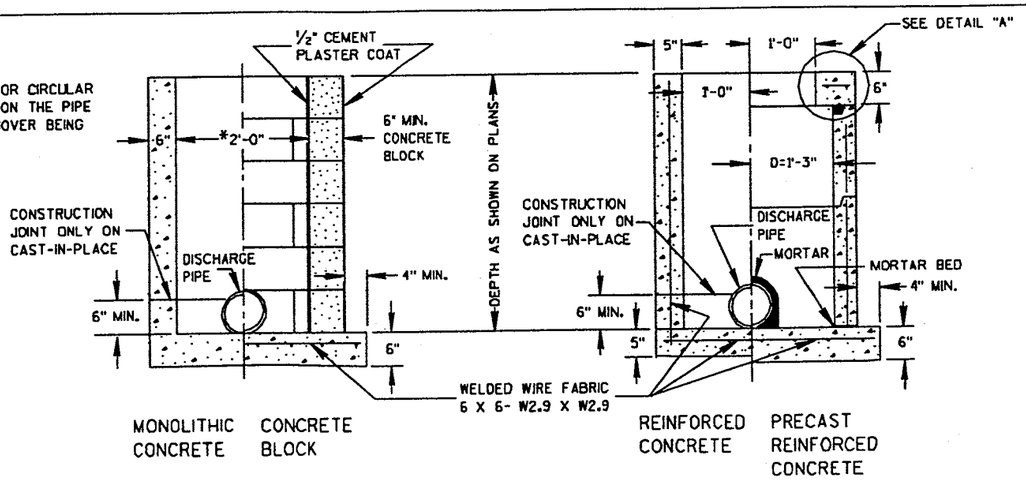

INLETS TYPE 1

GENERAL NOTES

DETAILS OF CONSTRUCTION, MATERIALS AND WORKMANSHIP NOT SHOWN ON THIS DRAWING SHALL CONFORM TO THE PERTINENT REQUIREMENTS OF THE STANDARD SPECIFICATIONS AND THE APPLICABLE SPECIAL PROVISIONS.

DETAILED DRAWINGS FOR PROPOSED ALTERNATE DESIGNS FOR UNDERGROUND DRAINAGE STRUCTURES SHALL BE SUBMITTED TO THE ENGINEER FOR APPROVAL PROVIDING THAT SUCH ALTERNATE DESIGNS MAKE PROVISION FOR EQUIVALENT CAPACITY AND STRENGTH.

ALL PRECAST INLET UNITS SHALL CONFORM TO THE PERTINENT REQUIREMENTS OF AASHTO DESIGNATION M 199.

ALL DRAINAGE STRUCTURES ARE DESIGNATED ON THE PLANS AS "MANHOLES 1-C", "CATCH BASINS 1-8", "INLETS 3-H", ETC. THE FIRST DIGIT DESIGNATES THE MASONRY PORTION OF THE STRUCTURE, AND THE FOLLOWING LETTER DESIGNATES THE TYPE OF COVER TO BE USED TO COMPRISE THE COMPLETE UNIT.

PRECAST REINFORCED BASES SHALL BE PLACED ON A BED OF MATERIAL AT LEAST 6 INCHES IN DEPTH, WHICH MEETS THE REQUIREMENTS OF GRANULAR BACKFILL. THIS BEDDING SHALL BE COMPACTED AND PROVIDE UNIFORM SUPPORT FOR THE ENTIRE AREA OF THE BASE.

PRECAST REINFORCED CONCRETE FLAT SLAB TOPS MAY BE USED ON THE STRUCTURES. THE TOPS SHALL BE INSTALLED ON A BED OF MORTAR.

ALL BAR STEEL REINFORCEMENT SHALL BE EMBEDDED 2 INCHES CLEAR UNLESS OTHERWISE SHOWN OR NOTED.

PRECAST REINFORCED CONCRETE RISERS SHALL BE PLACED WITH TONGUE DOWN.

(1) USE 2'-6" OPENING FOR TYPE 2 INLETS, 3'-0" OPENING FOR TYPE 3 INLETS, AND 2'-11" FOR TYPE 4 INLETS.

(2) USE 2'-0" OPENING FOR TYPE 1, 2 & 3 INLETS, 2'-6½" OPENING FOR TYPE 4 INLETS.

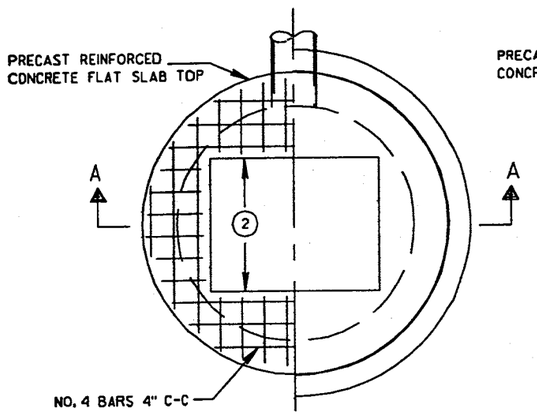

PLAN VIEW

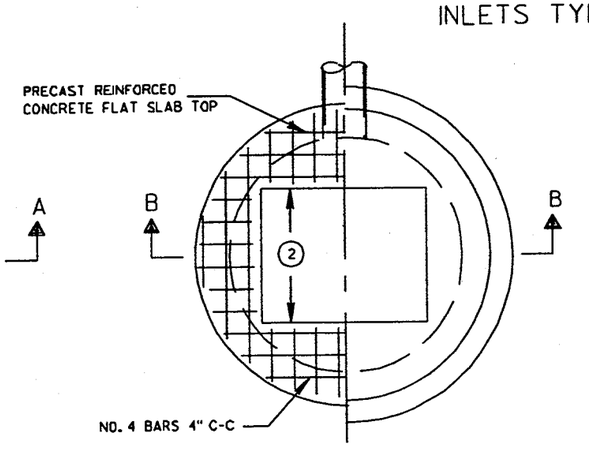

PLAN VIEW

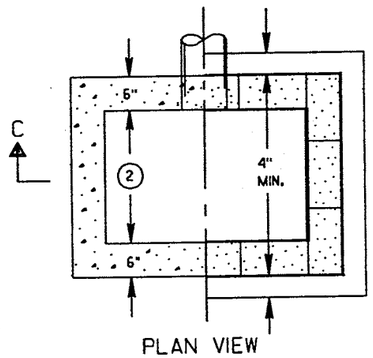

PLAN VIEW

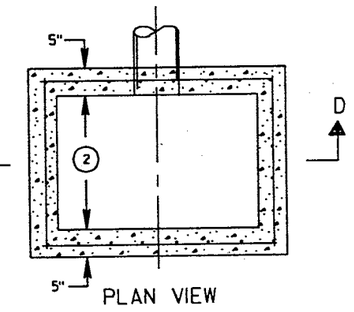

PLAN VIEW

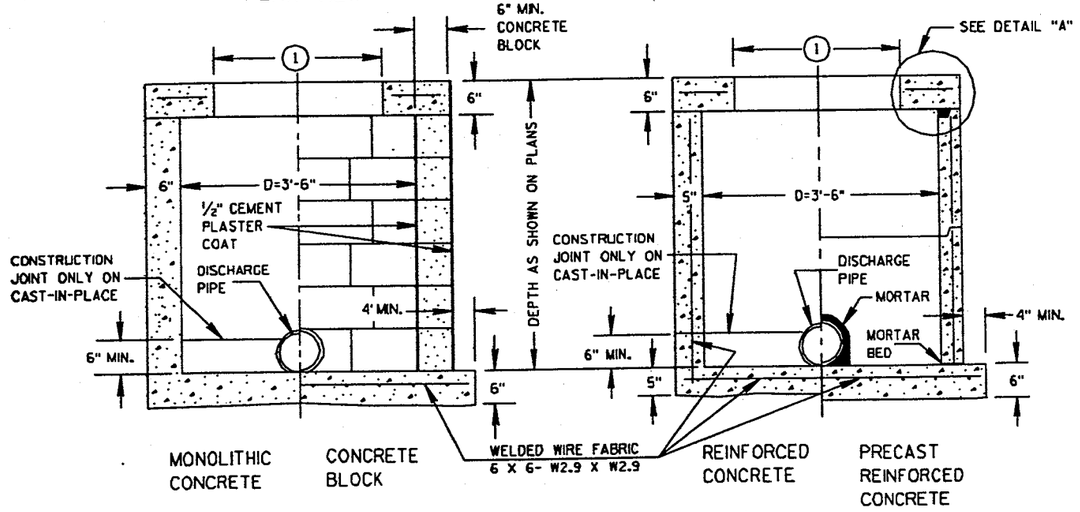

SECTION A-A

SECTION B-B

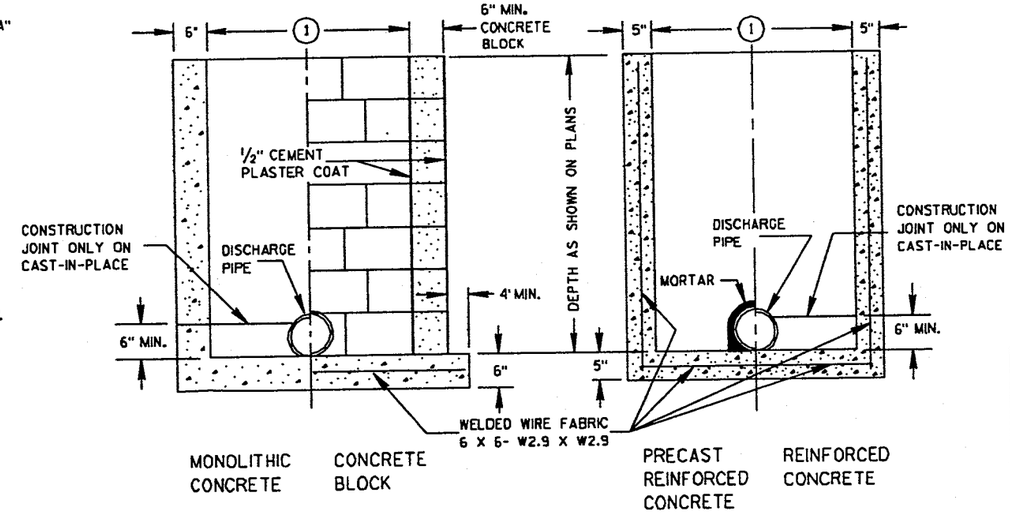

SECTION C-C

SECTION D-D

INLETS TYPE 2, 3 & 4

INLETS TYPE 1, 2, 3 & 4

STATE OF WISCONSIN
DEPARTMENT OF TRANSPORTATION

APPROVED

DATE — CHIEF ROADWAY DEVELOPMENT ENGINEER

FHWA

S.D.D. 8 C 1-5

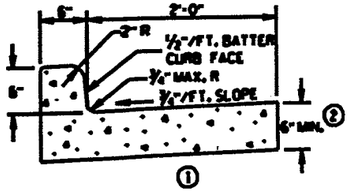

① TYPES A & D

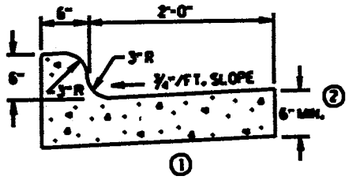

① TYPES K & L

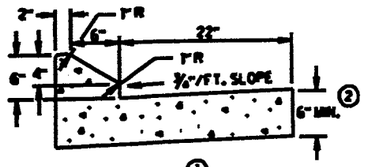

① TYPES G & J

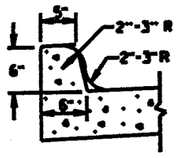

OPTIONAL CURB SHAPE
① FOR TYPES K & L

CONCRETE CURB & GUTTER 30"

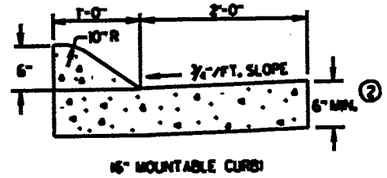

16" MOUNTABLE CURB

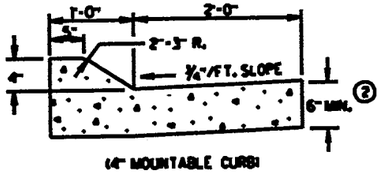

14" MOUNTABLE CURB

① TYPES A & D

CONCRETE CURB & GUTTER 36"

GENERAL NOTES

DETAILS OF CONSTRUCTION, MATERIALS AND WORKMANSHIP NOT SHOWN ON THIS DRAWING SHALL CONFORM TO THE PERTINENT REQUIREMENTS OF THE CONTRACT.

PAVEMENT TIES AND TIE BARS SHALL BE EPOXY COATED IN CONFORMANCE WITH SUBSECTION 505.2.6.2 OF THE STANDARD SPECIFICATIONS.

INTEGRAL CURB & GUTTER SHALL CONFORM TO THE DETAILS SHOWN FOR CONCRETE CURB & GUTTER INCLUDING THE TRANSVERSE GUTTER SLOPE. A LONGITUDINAL CONSTRUCTION JOINT IS NOT REQUIRED WITH INTEGRAL CURB AND GUTTER.

WHERE THE TRANSVERSE JOINTS IN THE PAVEMENT ARE REQUIRED TO BE SEALED, THE JOINTS IN THE INTEGRAL CURB AND GUTTER SHALL BE SEALED TO THE FACE OF CURB WITH THE SAME TYPE OF SEALANT. THE COST OF FURNISHING AND INSTALLING THIS SEALANT SHALL BE INCIDENTAL TO THE ITEM CONCRETE CURB AND GUTTER.

UNLESS OTHERWISE SHOWN ON THE TYPICAL CROSS SECTIONS, THE BASE COURSE AND UNCLASSIFIED EXCAVATION LIMITS ARE 2'-0" BEHIND THE BACK OF CURBS.

① TIE BARS ARE REQUIRED FOR CURB AND GUTTER TYPES A, G AND K.

② THE BOTTOM OF CURB AND GUTTER MAY BE CONSTRUCTED EITHER LEVEL OR PARALLEL TO THE SLOPE OF THE SUBGRADE OR BASE COURSE PROVIDED A 6" MINIMUM GUTTER THICKNESS IS MAINTAINED.

③ WHEN REVERSE SLOPE GUTTER IS REQUIRED, THE LOCATION(S) WILL BE SHOWN ELSEWHERE IN THE PLAN.

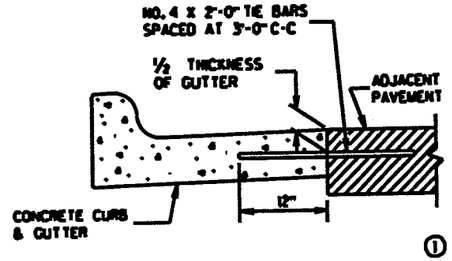

① TYPICAL TIE BAR LOCATION

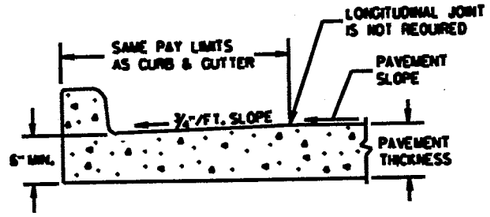

PARTIAL SECTION OF PAVEMENT WITH INTEGRAL CURB & GUTTER

③ REVERSE SLOPE GUTTER
(TYPICAL FOR ALL CURB & GUTTER TYPES)

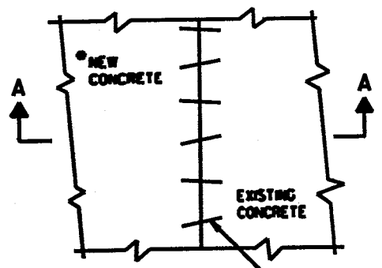

*NEW CURB & GUTTER, SURFACE DRAINS, CONCRETE PAVEMENT OR OTHER NEW CONCRETE.

PLAN VIEW

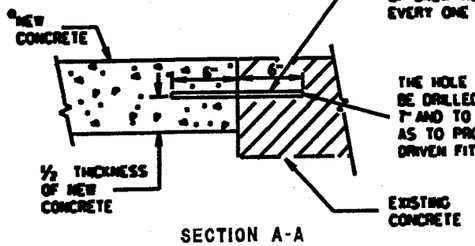

SECTION A-A

PAVEMENT TIES

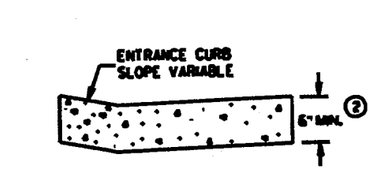

DRIVEWAY ENTRANCE CURB
(WHEN DIRECTED BY THE ENGINEER)

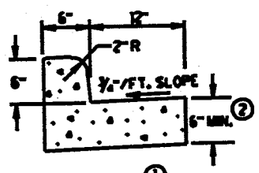

① TYPES A & D

CONCRETE CURB & GUTTER 18"

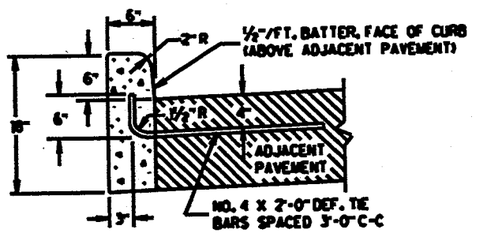

① TYPES A & D

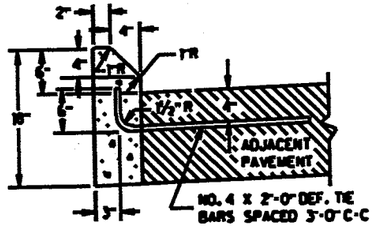

① TYPES G & J

CONCRETE CURB

CONCRETE CURB, CONCRETE CURB & GUTTER AND PAVEMENT TIES

STATE OF WISCONSIN
DEPARTMENT OF TRANSPORTATION

APPROVED

DATE CHIEF ROADWAY DEVELOPMENT ENGINEER

FHWA

S.D.D. 8 D 1-13

S.D.D. 8 D 1-13

ASPHALTIC FLUME

NOTE: TAPER CURB ENDS TO GUTTER IN 1'-0"

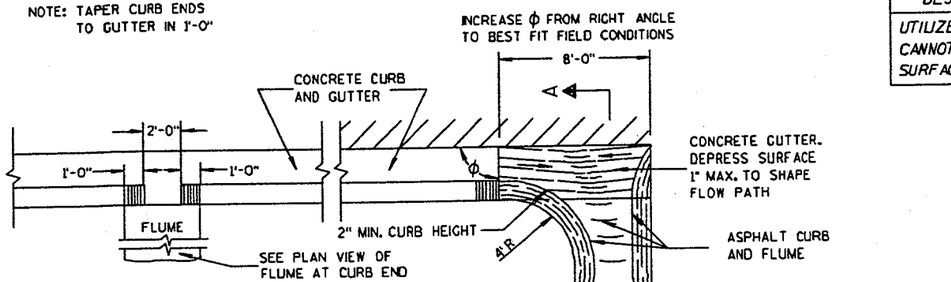

PLAN VIEW
CURB OPENING FOR FLUME

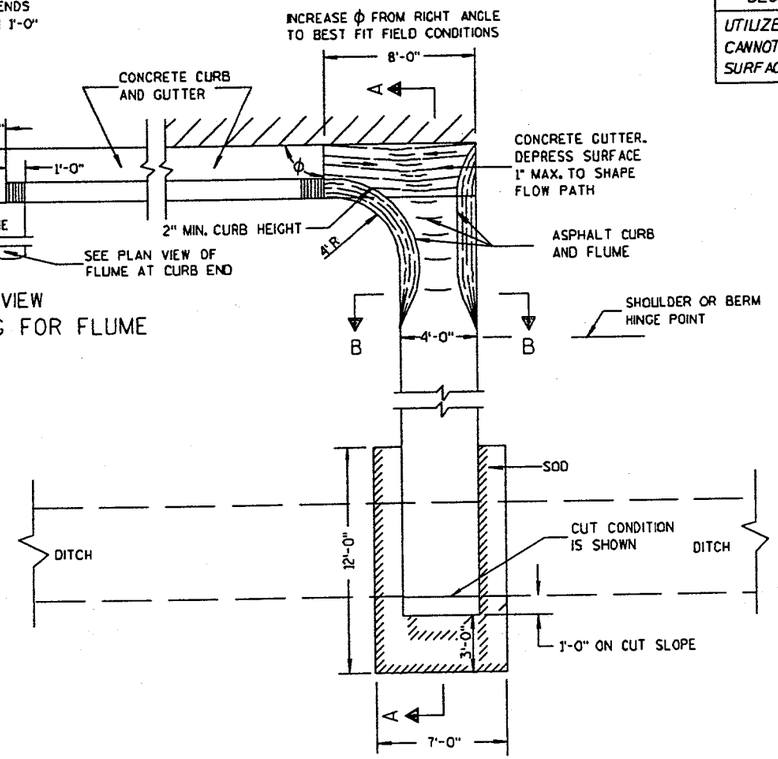

PLAN VIEW
FLUME AT CURB END

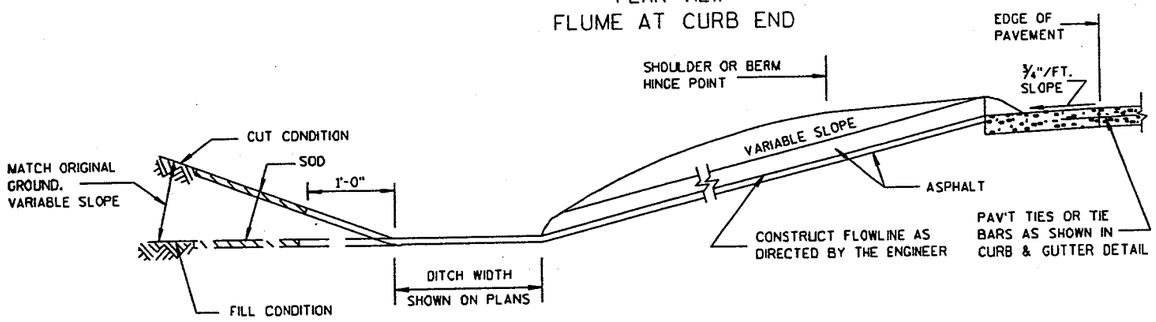

SECTION A-A

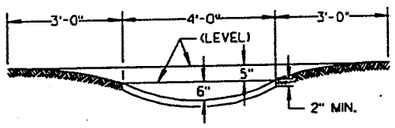

SECTION B-B

DESIGN NOTES: (WILL NOT APPEAR IN CONTRACT PLANS)

UTILIZE INLETS WHERE STORM WATER VOLUME AND VELOCITY CANNOT BE ACCOMODATED EFFECTIVELY WITH A FLUME OR SURFACE DRAIN.

GENERAL NOTES

DETAILS OF CONSTRUCTION, MATERIALS AND WORKMANSHIP NOT SHOWN ON THIS DRAWING SHALL CONFORM TO PERTINENT REQUIREMENTS OF THE STANDARD SPECIFICATIONS AND APPLICABLE SPECIAL PROVISIONS.

WELDED STEEL WIRE FABRIC SHALL BE IN ACCORDANCE WITH AASHTO SPECIFICATION M55.

① JOINTS SHALL BE ⅛ TO ¼ INCH WIDE BY 1½ INCHES DEEP AND SPACED AT UNIFORM INTERVALS OF APPROXIMATELY 4 FEET.

② GEOTEXTILE FABRIC TYPE "R" SHALL UNDERLAY THE FULL LENGTH AND WIDTH OF THE CONCRETE SURFACE DRAIN AND RIPRAP.

③ CONCRETE SURFACE DRAIN WITHOUT CURB AND GUTTER MAY BE USED ON BACKSLOPES WHEN SPECIFIED

③ CONCRETE SURFACE DRAIN

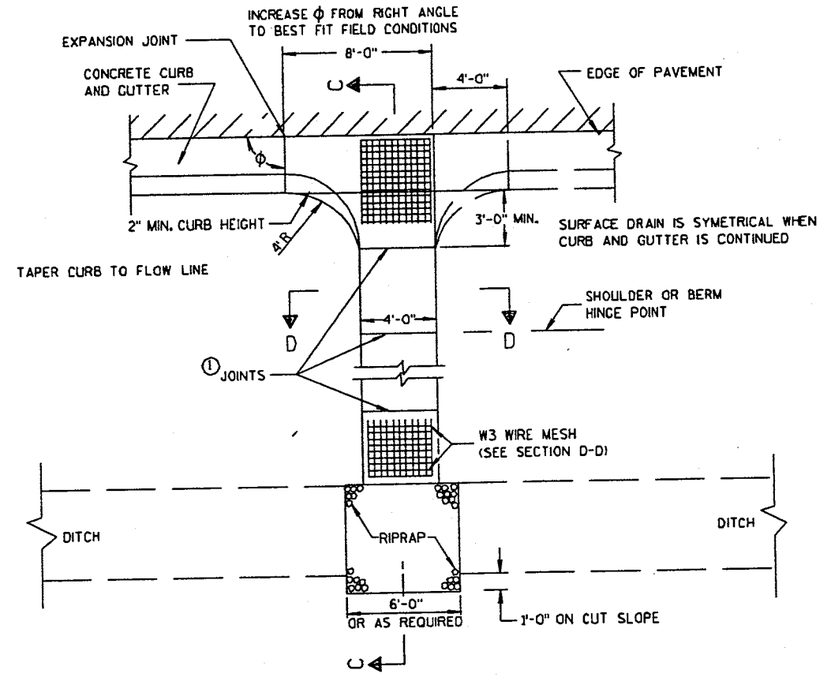

PLAN VIEW

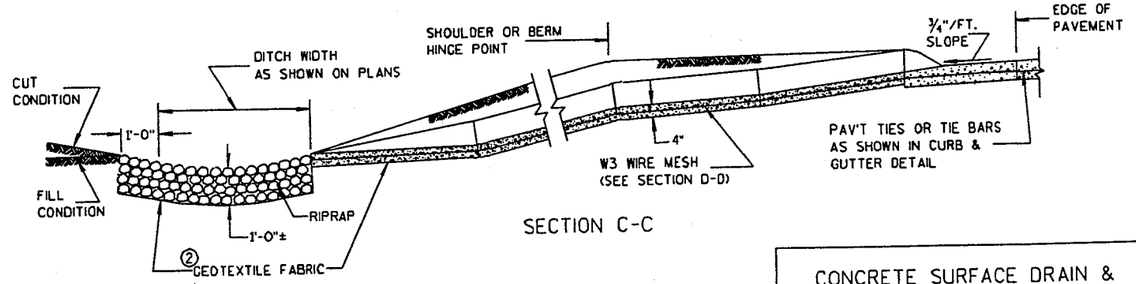

SECTION C-C

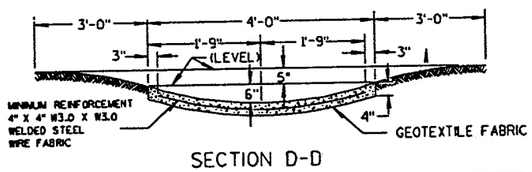

SECTION D-D

CONCRETE SURFACE DRAIN & ASPHALTIC FLUME

STATE OF WISCONSIN
DEPARTMENT OF TRANSPORTATION

APPROVED

DATE — STATE DESIGN ENGINEER FOR HWYS

FHWA

STATE MAINT. ENGINEER FOR HWYS

DATE

S.D.D. 8 D 4-3

S.D.D. 8 D 4-3

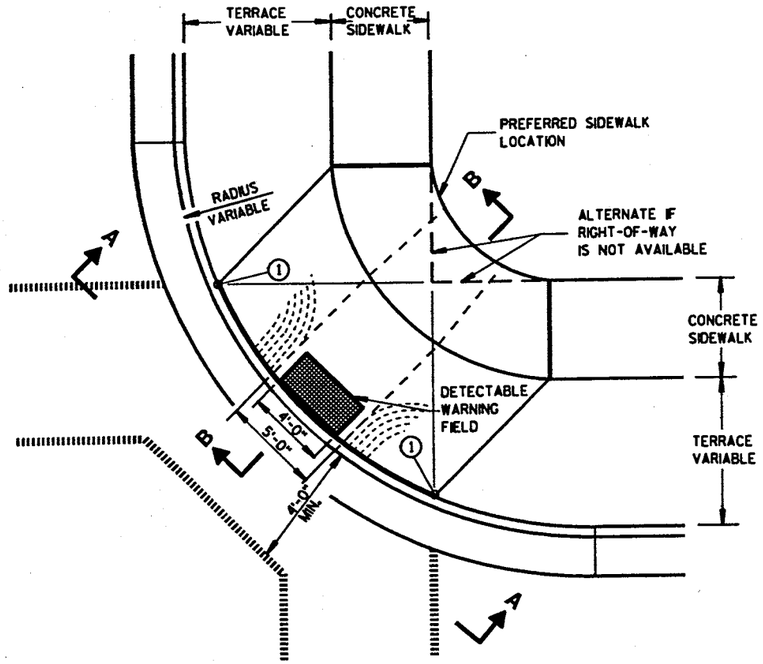

PLAN VIEW
TYPE 1 RAMP
(CENTER OF CORNER RADIUS)

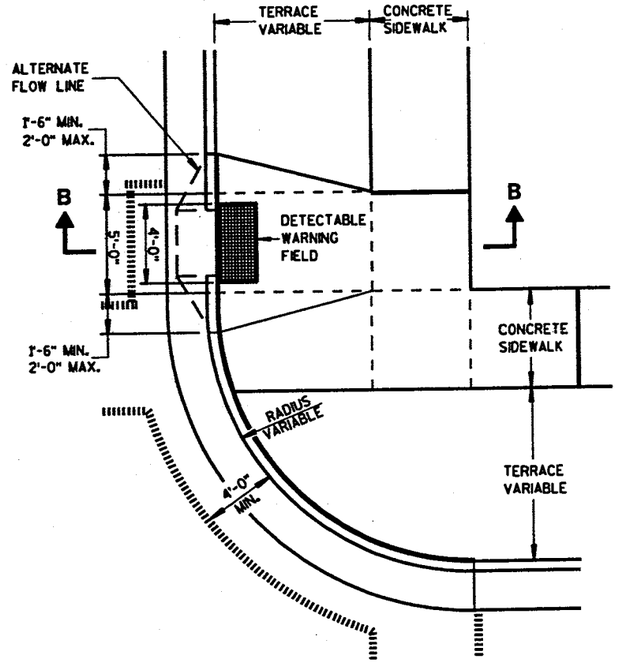

PLAN VIEW
TYPE 3 RAMP
(OUTSIDE OF CROSSWALK AREA)

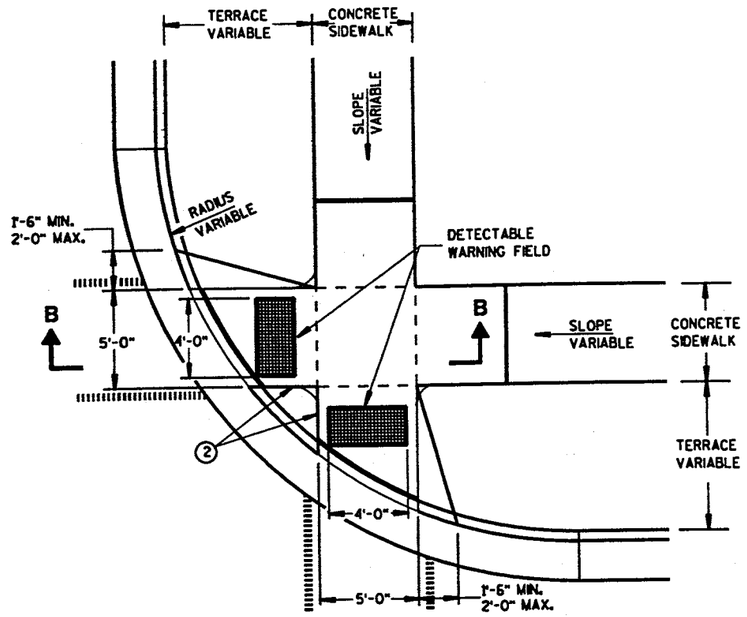

PLAN VIEW
TYPE 2 RAMP
(ON LINE WITH SIDEWALK)

GENERAL NOTES

DETAILS OF CONSTRUCTION, MATERIALS AND WORKMANSHIP NOT SHOWN ON THIS DRAWING SHALL CONFORM TO THE PERTINENT REQUIREMENTS OF THE STANDARD SPECIFICATIONS AND THE APPLICABLE SPECIAL PROVISIONS.

RAMPS SHALL BE BUILT AT 12H:1V OR FLATTER. WHEN NECESSARY, THE SIDEWALK ELEVATION MAY BE LOWERED TO MEET THE HIGH POINT ON THE RAMP.

TYPE 1 RAMPS SHALL HAVE A NORMAL SIDEWALK APRON AND CURB ON BOTH SIDES OF RAMP.

DETECTABLE WARNING FIELD SHALL BE MEASURED AND PAID BY THE SQUARE FOOT AS "CURB RAMP DETECTABLE WARNING FIELD". THE CONCRETE PEDESTRIAN CURB, IF NEEDED, SHALL BE MEASURED AND PAID BY THE LINEAL FOOT AS "CONCRETE CURB PEDESTRIAN". ALL OTHER CONCRETE SIDEWALK IN THE CURB RAMP AREA SHALL BE MEASURED AND PAID BY THE SQUARE FOOT AS CONCRETE SIDEWALK.

SELECT CURB RAMP DETECTABLE WARNING FIELD MATERIALS AND DEVICES FROM THE DEPARTMENT'S APPROVED MATERIALS LIST. THE COLOR OF THE DETECTABLE WARNING FIELD IS SPECIFIED ELSEWHERE AND IS INCIDENTAL TO THE BID ITEM OF "CURB RAMP DETECTABLE WARNING FIELD".

SURFACE TEXTURE OF THE RAMP SHALL BE OBTAINED BY COARSE BROOMING TRANSVERSE TO THE SLOPE OF THE RAMP.

USE THE TYPE 3 RAMP ONLY WHEN A TYPE 1 OR TYPE 2 CANNOT BE ACHIEVED BECAUSE OF FIELD CONDITIONS.

(1) THIS POINT IS AN EXTENSION OF OUTSIDE EDGE OF APPROACHING SIDEWALK WHERE IT MEETS THE BACK OF CONCRETE CURB.

(2) WHEN THIS DISTANCE IS LESS THAN 6'-0" IT MAY BE DIFFICULT TO ACHIEVE A 12H:1V SLOPE, OR FLATTER, ON THE RAMP. REDUCE CURB HEIGHT IN TRIANGLE AREA TO ACHIEVE 12H:1V SLOPE, OR FLATTER, ON RAMP. 2" MINIMUM CURB HEIGHT.

LEGEND

- ½" EXPANSION JOINT-SIDEWALK
- CONTRACTION JOINT FIELD LOCATED
- PAVEMENT MARKING CROSSWALK (WHITE)
- ALTERNATIVE LAYOUT

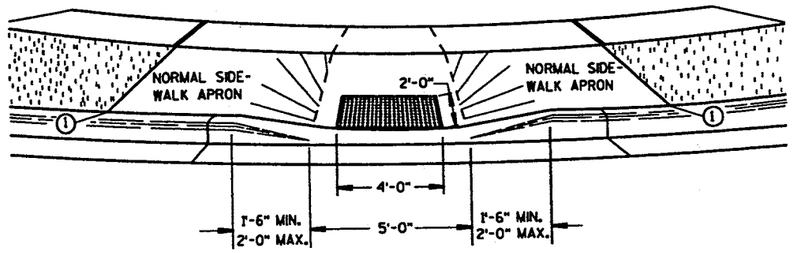

VIEW A-A

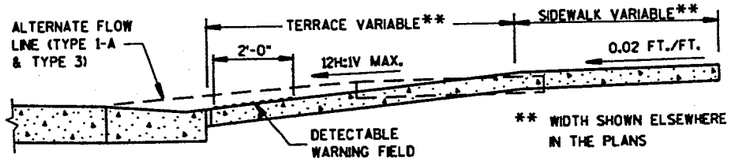

SECTION B-B

CURB RAMPS
TYPES 1, 2 AND 3

STATE OF WISCONSIN
DEPARTMENT OF TRANSPORTATION

S.D.D. 8 D 5-9a

6

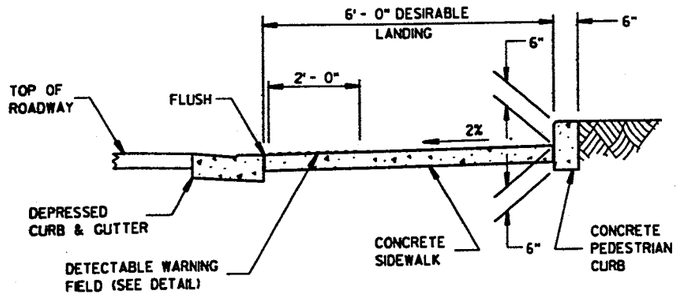

SECTION C-C

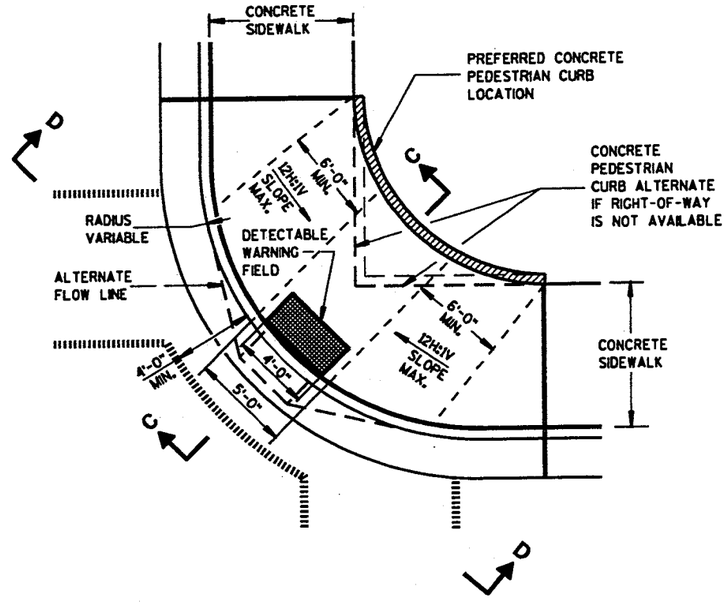

PLAN VIEW

TYPE 1-A RAMP

(NO TERRACE)

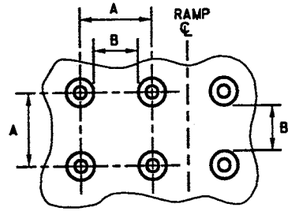

PLAN VIEW

	MIN.	MAX.
A	1.6"	2.4"
B	0.65"	1.5"
C	*	*
D	0.9"	1.4"

* THE C DIMENSION IS 50% TO 65% OF THE D DIMENSION.

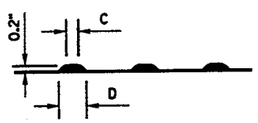

ELEVATION VIEW

TRUNCATED DOMES

DETECTABLE WARNING PATTERN DETAIL

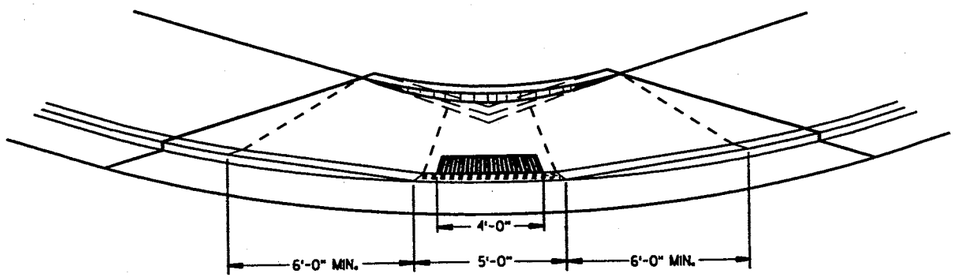

VIEW D-D

LEGEND

- ½" EXPANSION JOINT-SIDEWALK
- CONTRACTION JOINT FIELD LOCATED
- PAVEMENT MARKING CROSSWALK (WHITE)
- ALTERNATIVE LAYOUT

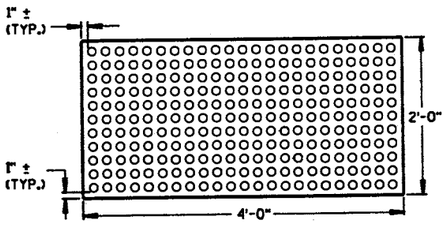

PLAN VIEW

DETECTABLE WARNING FIELD (TYPICAL)

6

CURB RAMPS TYPE 1-A

STATE OF WISCONSIN
DEPARTMENT OF TRANSPORTATION

APPROVED

DATE — CHIEF ROADWAY DEVELOPMENT ENGINEER

FHWA

S.D.D. 8 D 5-9b

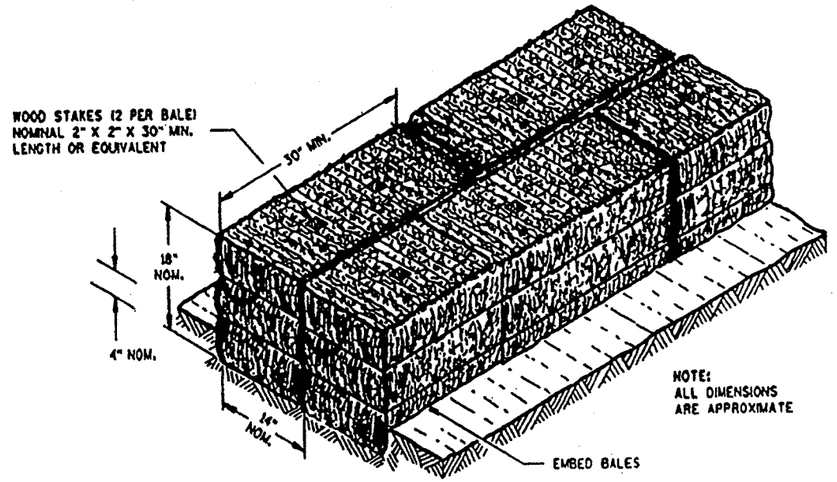

SECTION A-A

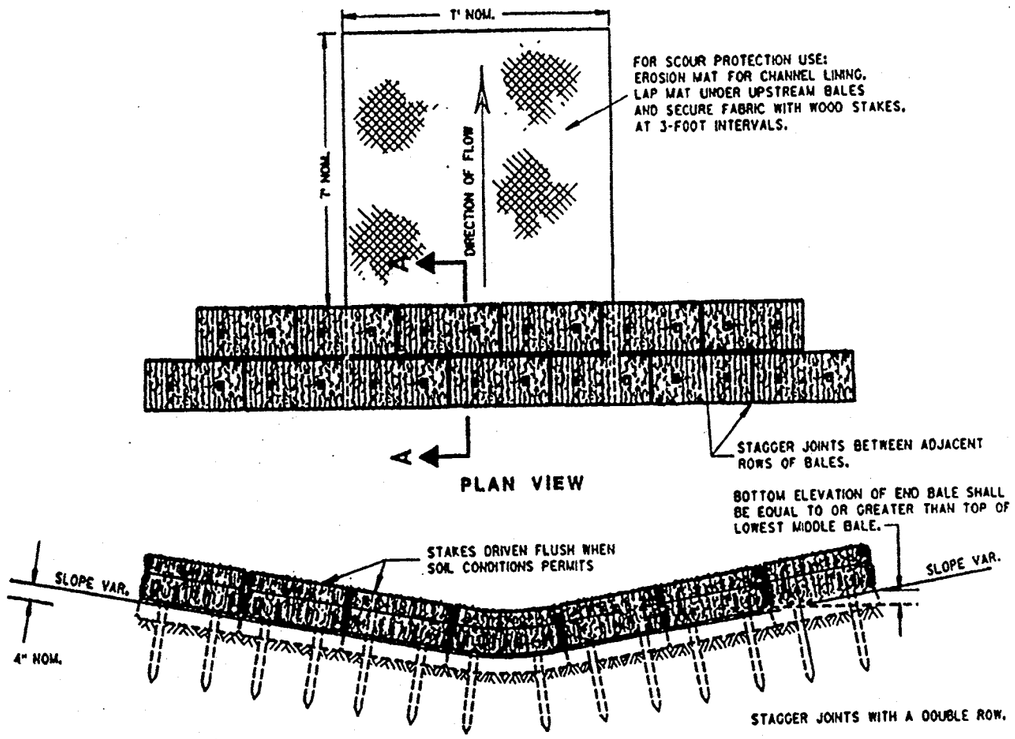

PLAN VIEW

FRONT ELEVATION

TEMPORARY DITCH CHECK USING EROSION BALES ①

GENERAL NOTES

DETAILS OF CONSTRUCTION, MATERIALS AND WORKMANSHIP NOT SHOWN ON THIS DRAWING SHALL CONFORM TO THE PERTINENT REQUIREMENTS OF THE STANDARD SPECIFICATIONS AND THE APPLICABLE SPECIAL PROVISIONS.

① TEMPORARY DITCH CHECKS EITHER EROSION BALES OR MANUFACTURED SHALL BE PAID FOR UNDER THE BID ITEM OF TEMPORARY DITCH CHECK. THE DEPARTMENT WILL NOT PAY FOR TEMPORARY DITCH CHECKS CONSTRUCTED OF A SINGLE ROW OF EROSION BALES.

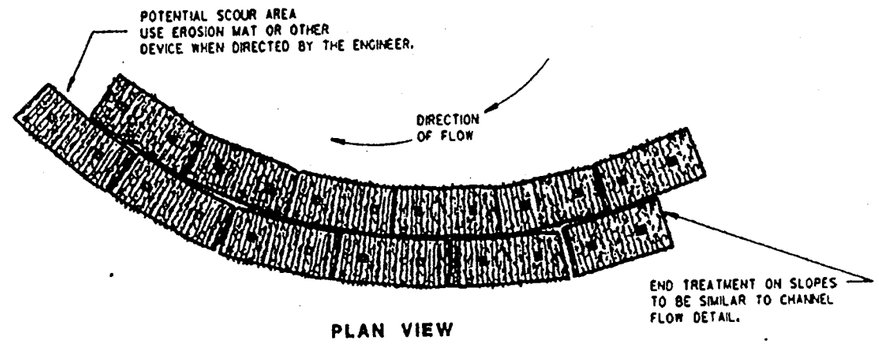

PLAN VIEW

WHEN ALTERING THE DIRECTION OF FLOW

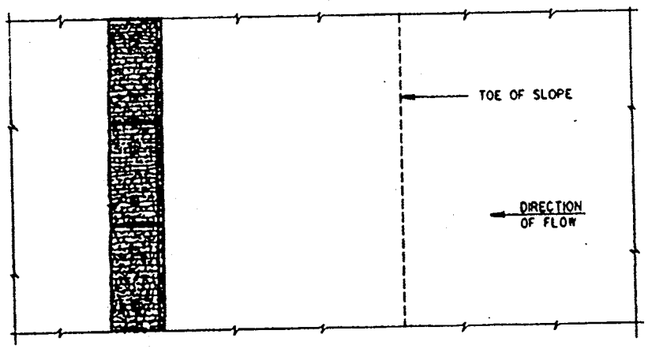

PLAN VIEW

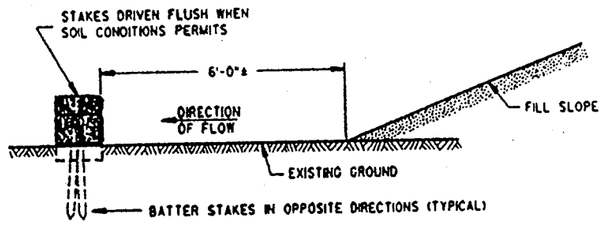

FRONT ELEVATION

WHEN EXISTING GROUND SLOPES AWAY FROM FILL SLOPE

EROSION BALES FOR SHEET FLOW

TYPICAL INSTALLATIONS OF EROSION BALES / TEMPORARY DITCH CHECKS

STATE OF WISCONSIN
DEPARTMENT OF TRANSPORTATION

APPROVED
6/4/96
DATE
CHIEF ROADWAY DEVELOPMENT ENGINEER

FHWA

S.D.D. 8 E 8-3

S.D.D. 8 E 8-3

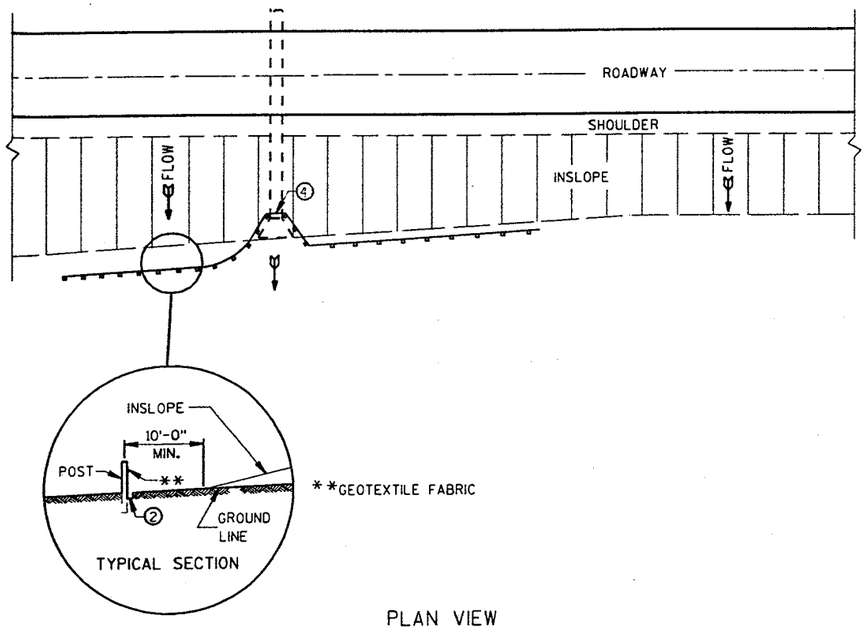

PLAN VIEW

TYPICAL APPLICATION OF SILT FENCE

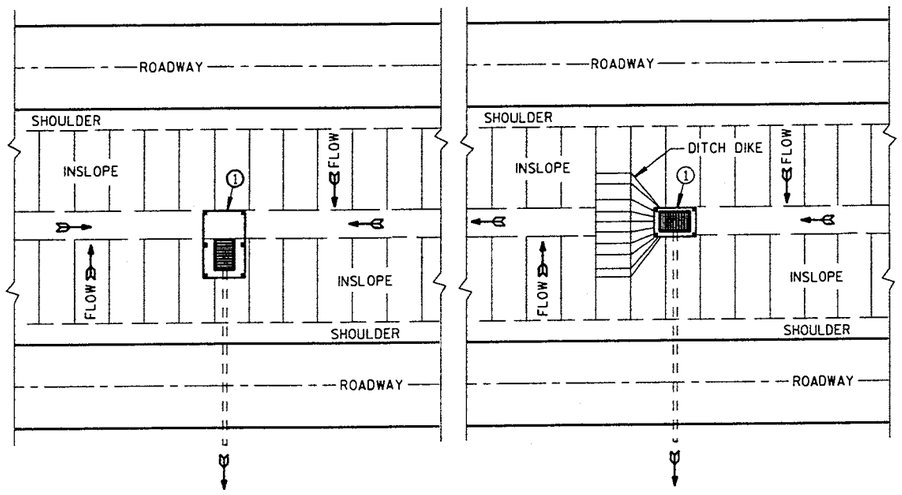

PLAN VIEW

SILT FENCE AT MEDIAN SURFACE DRAINS

GENERAL NOTES

DETAILS OF CONSTRUCTION NOT SHOWN ON THIS DRAWING SHALL CONFORM TO THE PERTINENT REQUIREMENTS OF THE STANDARD SPECIFICATIONS AND APPLICABLE SPECIAL PROVISIONS.

1. HORIZONTAL BRACE REQUIRED WITH 2" X 4" WOODEN FRAME OR EQUIVALENT AT TOP OF POSTS.
2. TRENCH SHALL BE A MINIMUM OF 4" WIDE & 6" DEEP TO BURY AND ANCHOR THE GEOTEXTILE FABRIC. FOLD MATERIAL TO FIT TRENCH AND BACKFILL & COMPACT TRENCH WITH EXCAVATED SOIL.
3. WOOD POSTS SHALL BE A MINIMUM SIZE OF 1⅛" X 1⅛" OF OAK OR HICKORY.
4. SILT FENCE TO EXTEND ACROSS THE TOP OF THE PIPE.

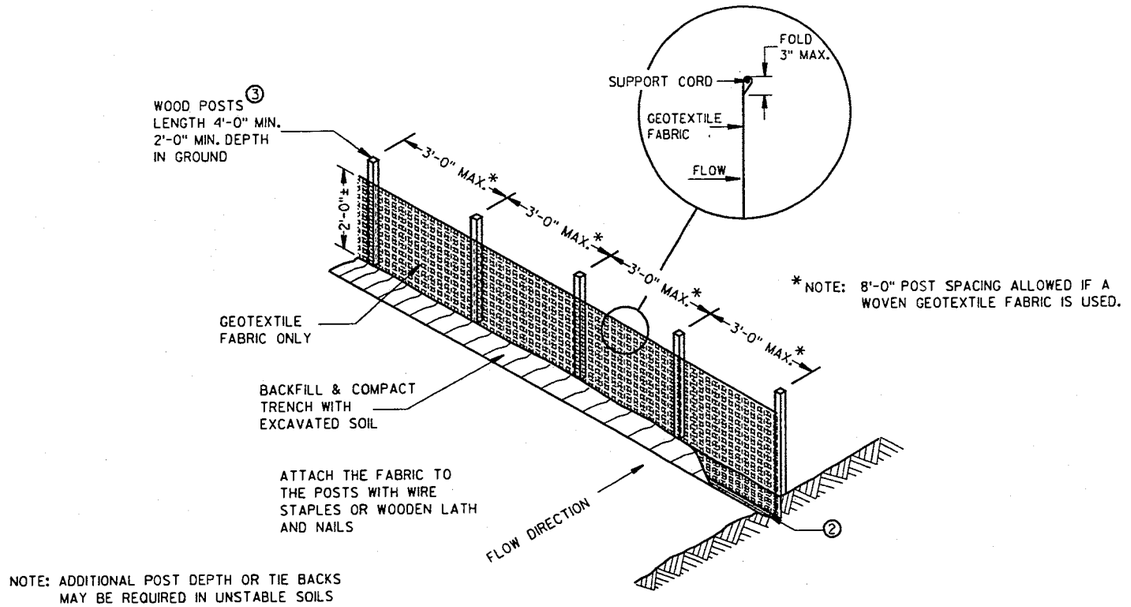

NOTE: ADDITIONAL POST DEPTH OR TIE BACKS MAY BE REQUIRED IN UNSTABLE SOILS

SILT FENCE

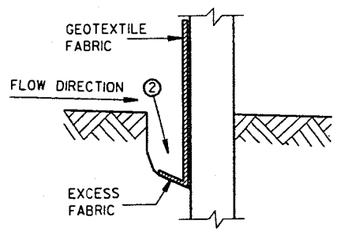

TRENCH DETAIL

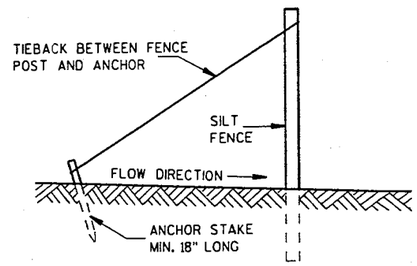

SILT FENCE TIE BACK

(WHEN REQUIRED BY THE ENGINEER)

SILT FENCE

STATE OF WISCONSIN
DEPARTMENT OF TRANSPORTATION

APPROVED

DATE CHIEF ROADWAY DEVELOPMENT ENGINEER

FHWA

S.D.D. 8 E 9-5

S.D.D. 8 E 9-5

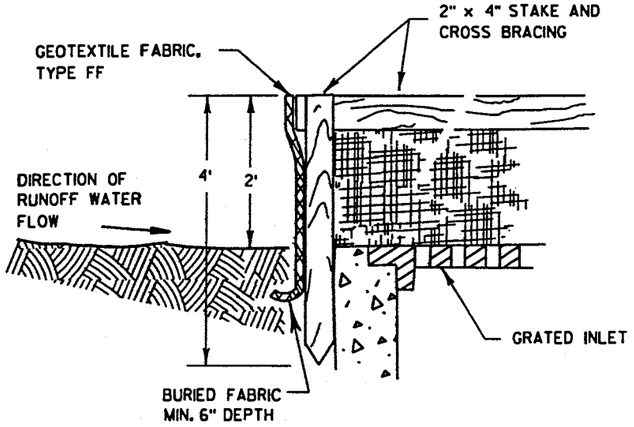

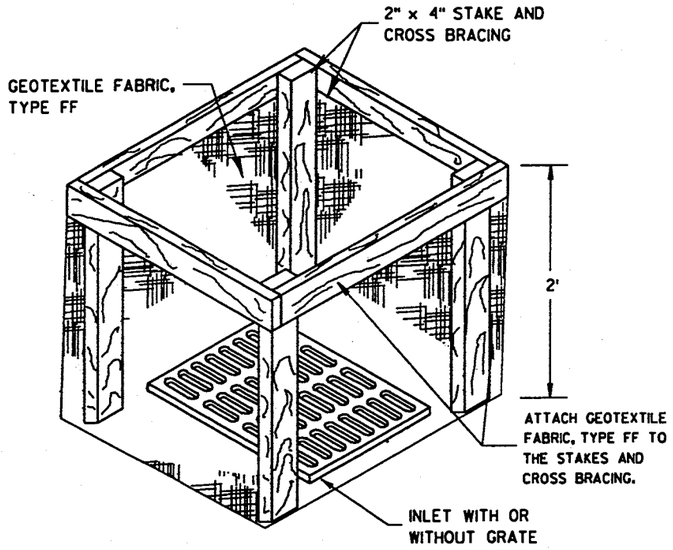

INLET PROTECTION, TYPE A

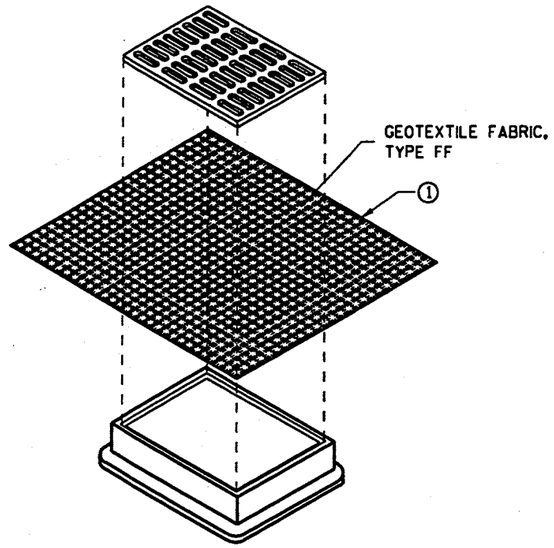

INLET PROTECTION, TYPE B (WITHOUT CURB BOX)

(CAN BE INSTALLED IN ANY INLET WITHOUT A CURB BOX)

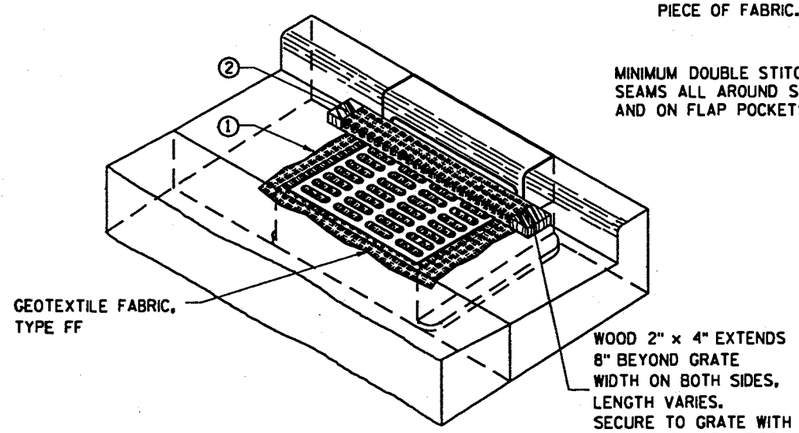

INLET PROTECTION, TYPE C (WITH CURB BOX)

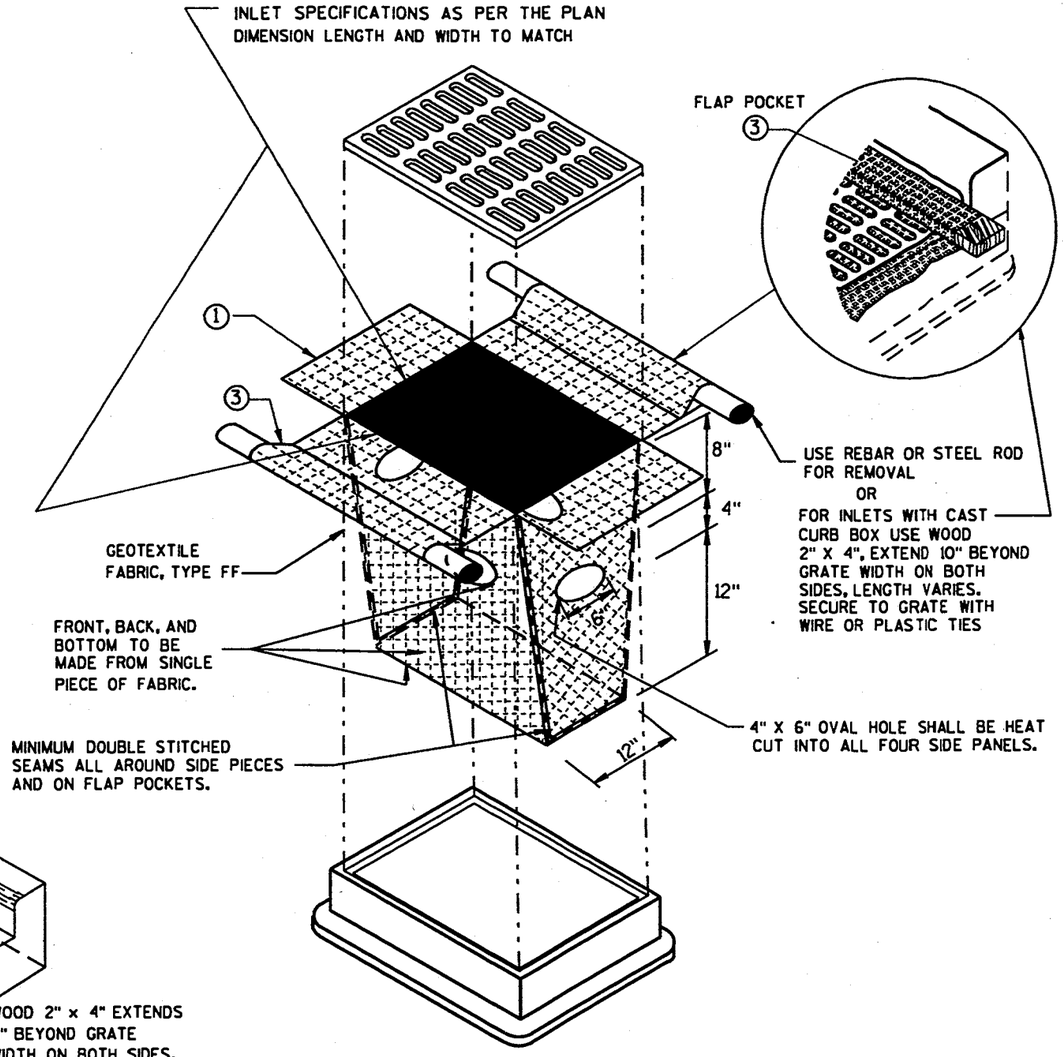

INLET PROTECTION, TYPE D

(CAN BE INSTALLED IN ANY INLET TYPE WITH OR WITHOUT A CURB BOX AS PER NOTE ②)

GENERAL NOTES

INLET PROTECTION DEVICES SHALL BE MAINTAINED OR REPLACED AT THE DIRECTION OF THE ENGINEER.

MANUFACTURED ALTERNATIVES APPROVED AND LISTED ON THE DEPARTMENT'S EROSION CONTROL PRODUCT ACCEPTABILITY LIST MAY BE SUBSTITUTED.

WHEN REMOVING OR MAINTAINING INLET PROTECTION, CARE SHALL BE TAKEN SO THAT THE SEDIMENT TRAPPED ON THE GEOTEXTILE FABRIC DOES NOT FALL INTO THE INLET. ANY MATERIAL FALLING INTO THE INLET SHALL BE REMOVED IMMEDIATELY.

① FINISHED SIZE, INCLUDING FLAP POCKETS WHERE REQUIRED, SHALL EXTEND A MINIMUM OF 10" AROUND THE PERIMETER TO FACILITATE MAINTENANCE OR REMOVAL.

② FOR INLET PROTECTION, TYPE C (WITH CURB BOX), AN ADDITIONAL 18" OF FABRIC IS WRAPPED AROUND THE WOOD AND SECURED WITH STAPLES. THE WOOD SHALL NOT BLOCK THE ENTIRE HEIGHT OF THE CURB BOX OPENING.

③ FLAP POCKETS SHALL BE LARGE ENOUGH TO ACCEPT WOOD 2X4.

INSTALLATION NOTES

TYPE B & C

TRIM EXCESS FABRIC IN THE FLOW LINE TO WITHIN 3" OF THE GRATE.

THE CONTRACTOR SHALL DEMONSTRATE A METHOD OF MAINTENANCE, USING A SEWN FLAP, HAND HOLDS OR OTHER METHOD TO PREVENT ACCUMULATED SEDIMENT FROM ENTERING THE INLET.

TYPE D

DO NOT INSTALL INLET PROTECTION TYPE D IN INLETS SHALLOWER THAN 30", MEASURED FROM THE BOTTOM OF THE INLET TO THE TOP OF THE GRATE.

TRIM EXCESS FABRIC IN THE FLOW LINE TO WITHIN 3" OF THE GRATE.

THE INSTALLED BAG SHALL HAVE A MINIMUM SIDE CLEARANCE, BETWEEN THE INLET WALLS AND THE BAG, MEASURED AT THE BOTTOM OF THE OVERFLOW HOLES, OF 3". WHERE NECESSARY THE CONTRACTOR SHALL CINCH THE BAG, USING PLASTIC ZIP TIES, TO ACHIEVE THE 3" CLEARANCE. THE TIES SHALL BE PLACED AT A MAXIMUM OF 4" FROM THE BOTTOM OF THE BAG.

INLET PROTECTION TYPE A, B, C, AND D

STATE OF WISCONSIN
DEPARTMENT OF TRANSPORTATION

APPROVED

DATE — CHIEF ROADWAY DEVELOPMENT ENGINEER

FHWA

METAL APRON ENDWALLS

PIPE DIA. (IN.)	MIN. THICK. (inches) STEEL	MIN. THICK. (inches) ALUM.	DIMENSIONS (inches) A (±1")	B (MAX.)	H (±1")	L (±1½")	L_1 ①	L_2 ①	W (±2")	APPROX. SLOPE	BODY
12	.064	.060	6	6	6	21	12	17½	24	2½ to 1	1 Pc.
15	.064	.060	7	8	6	26	14	21¾	30	2½ to 1	1 Pc.
18	.064	.060	8	10	6	31	15	28¼	36	2½ to 1	1 Pc.
21	.064	.060	9	12	6	36	18	29⅝	42	2½ to 1	1 Pc.
24	.064	.075	10	13	6	41	18	37¼	48	2½ to 1	1 Pc.
30	.079	.075	12	16	8	51	18	52¼	60	2½ to 1	1 Pc.
36	.079	.105	14	19	9	60	24	59¾	72	2½ to 1	2 Pc.
42	.109	.105	16	22	11	69	24	75⅝	84	2½ to 1	2 Pc.
48	.109	.105	18	27	12	78	24	81	90	2¼ to 1	3 Pc.
54	.109	.105	18	30	12	84	30	85½	102	2¼ to 1	3 Pc.
60	.109×	.105×	18	33	12	87	—	—	114	2 to 1	3 Pc.
66	.109×	.105×	18	36	12	87	—	—	120	2 to 1	3 Pc.
72	.109×	.105×	18	39	12	87	—	—	126	2 to 1	3 Pc.
78	.109×	.105×	18	42	12	87	—	—	132	1½ to 1	3 Pc.
84	.109×	.105×	18	45	12	87	—	—	138	1½ to 1	3 Pc.
90	.109×	.105×	18	37	12	87	—	—	144	1½ to 1	3 Pc.
96	.109×	.105×	18	35	12	87	—	—	150	1½ to 1	3 Pc.

× EXCEPT CENTER PANEL SEE GENERAL NOTES

REINFORCED CONCRETE APRON ENDWALLS

PIPE DIA. (IN.)	DIMENSIONS (inches) T	A	B	C	D	E	G	APPROX. SLOPE
12	2	4	24	48⅛	72⅛	24	2	3 to 1
15	2¼	6	27	46	73	30	2¼	3 to 1
18	2½	9	27	46	73	36	2½	3 to 1
21	2¾	9	36	37½	73½	42	2¾	3 to 1
24	3	9½	43½	30	73½	48	3	3 to 1
27	3¼	10½	49½	24	73½	54	3¼	3 to 1
30	3½	12	54	19¾	73½	60	3½	3 to 1
36	4	15	63	34¾	97¾	72	4	3 to 1
42	4½	21	63	35	98	78	4½	3 to 1
48	5	24	72	26	98	84	5	3 to 1
54	5½	27	65	* 33¼-35 ** 98¼- 100		90	5½	2⅔ to 1
60	6	* 30-35 **	60	39	99	96	5	2 to 1
66	6½	* 24-30 **	* 72-78 **	* 21-27	99	102	5½	2 to 1
72	7	* 24-36 **	78	21	99	108	6	2 to 1
78	7½	* 24-36 **	78	21	99	114	6½	2 to 1
84	8	36	90½	21	111½	120	6½	1½ to 1
90	8½	41	87½	24	111½	132	6½	1½ to 1

*MINIMUM
**MAXIMUM

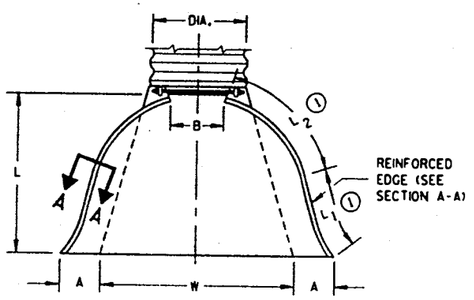

PLAN VIEW

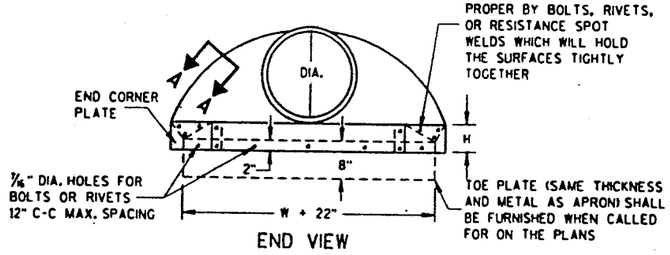

END VIEW

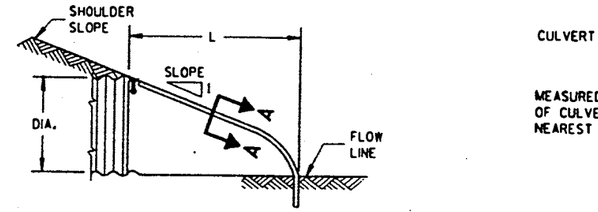

SIDE ELEVATION

METAL ENDWALLS

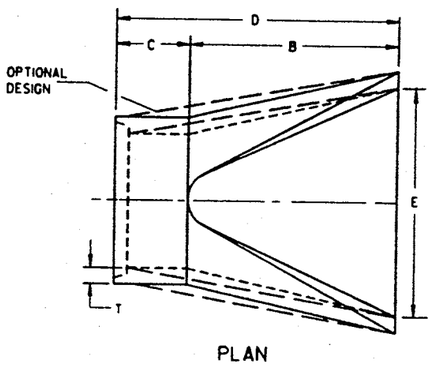

PLAN

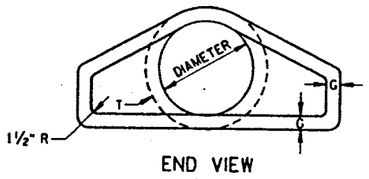

END VIEW

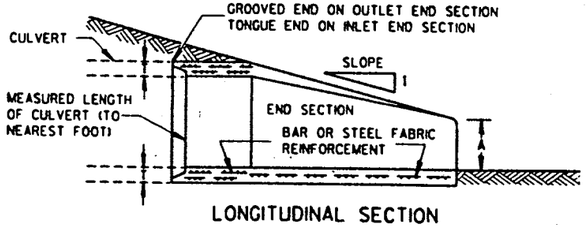

LONGITUDINAL SECTION

CONCRETE ENDWALLS

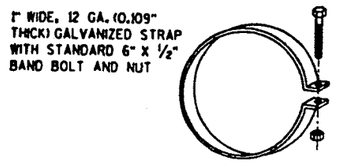

ALTERNATE FOR TYPE 1 CONNECTION

END SECTION CONNECTOR STRAP

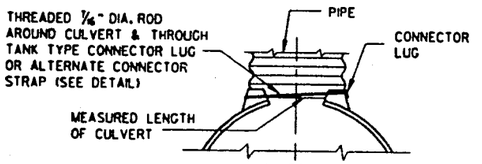

TYPE 1
FOR 12" THRU 24" CORR. PIPE

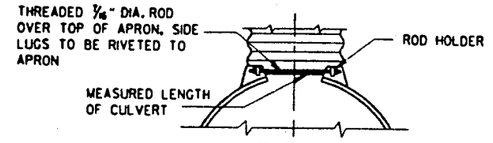

TYPE 2
FOR 30" THRU 96" CORR. PIPE

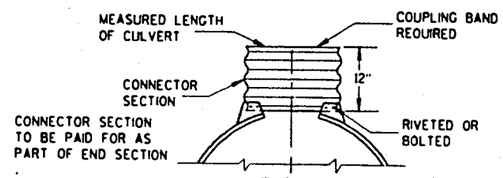

TYPE 3
FOR 42" THRU 96" CORR. PIPE

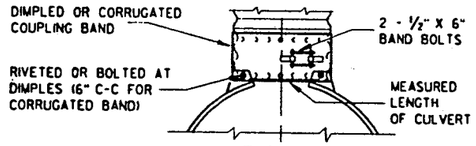

TYPE 5
ALTERNATE FOR:
ALL SIZES CORRUGATED CIRCULAR PIPE

NOTE: DIMPLED BAND FITS OVER OUTSIDE OF ENDWALL, AND CORRUGATED BAND FITS INSIDE ENDWALL. DIMPLED BAND MAY BE USED WITH HELICALLY CORRUGATED PIPE.

FOR CIRCUMFERENTIALLY CORRUGATED PIPE USE ENDWALL CONNECTION DETAILS 1, 2, 3 OR 5 AS APPLICABLE.

FOR HELICALLY CORRUGATED PIPE USE ENDWALL CONNECTION DETAILS 1, 2 OR 5.

FOR HELICALLY CORRUGATED PIPES WITH TWO CIRCUMFERENTIAL CORRUGATIONS AT EACH END USE ENDWALL CONNECTION DETAILS 1, 2 OR 3.

CONNECTION DETAILS

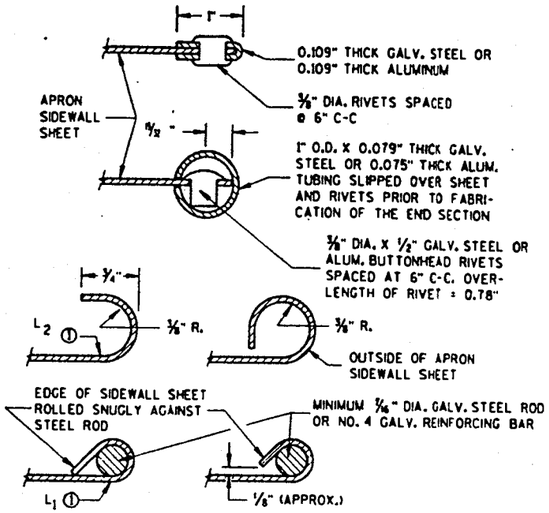

SECTION A-A

GENERAL NOTES

DETAILS OF CONSTRUCTION, MATERIALS AND WORKMANSHIP NOT SHOWN ON THIS DRAWING SHALL CONFORM TO THE PERTINENT REQUIREMENTS OF THE STANDARD SPECIFICATIONS AND THE APPLICABLE SPECIAL PROVISIONS.

CONCRETE CULVERT ENDWALLS MAY NOT BE USED WITH GALVANIZED STEEL OR ALUMINUM CULVERT PIPE OR VISE VERSA. GALVANIZED STEEL OR ALUMINUM ENDWALLS SHALL NORMALLY BE INSTALLED ON CULVERT PIPE OF THE SAME METAL.

ALL THREE PIECE STEEL APRON ENDWALLS FOR 60" DIAMETER PIPE AND LARGER SHALL HAVE 0.109" SIDES AND 0.138" CENTER PANELS. ALL THREE PIECE ALUMINUM APRON ENDWALLS FOR 60" DIAMETER PIPE AND LARGER SHALL HAVE 0.105" SIDES AND 0.134" CENTER PANELS. THE WIDTH OF CENTER PANELS SHALL BE GREATER THAN 20 PERCENT OF THE PIPE PERIMETER.

LAP SEAMS SHALL BE TIGHTLY JOINED BY GALVANIZED RIVETS OR BOLTS FOR STEEL UNITS AND ALUMINUM RIVETS AND BOLTS FOR ALUMINUM UNITS. FOR THE 60" THROUGH 96" DIAMETER APRON ENDWALL SIZES, THE REINFORCED EDGES AND CENTER PANEL SEAMS SHALL BE FURTHER REINFORCED WITH GALVANIZED STEEL OR ALUMINUM STIFFENER ANGLES. THE ANGLES SHALL BE ATTACHED BY GALVANIZED NUTS AND BOLTS FOR STEEL UNITS AND ALUMINUM NUTS AND BOLTS FOR ALUMINUM UNITS.

WHERE TWO OR MORE PIPES WITH APRON ENDWALLS ARE LAID ADJACENT TO EACH OTHER, THEY SHALL BE SEPARATED BY A DISTANCE SUFFICIENT TO PROVIDE A MINIMUM CLEARANCE OF 6 INCHES BETWEEN APRON ENDWALLS.

① FOR PIPE SIZES UP TO 60" DIAMETER, A 180° ROLLED EDGE MAY BE USED INSTEAD OF STEEL ROD REINFORCEMENT. SEE SECTION A-A.

APRON ENDWALLS FOR CULVERT PIPE

STATE OF WISCONSIN
DEPARTMENT OF TRANSPORTATION

APPROVED 11/30/94 DATE
CHIEF, ROADWAY DEVELOPMENT ENGINEER
FHWA

S.D.D. 8 F 1-11

S.D.D. 8 F 1-11

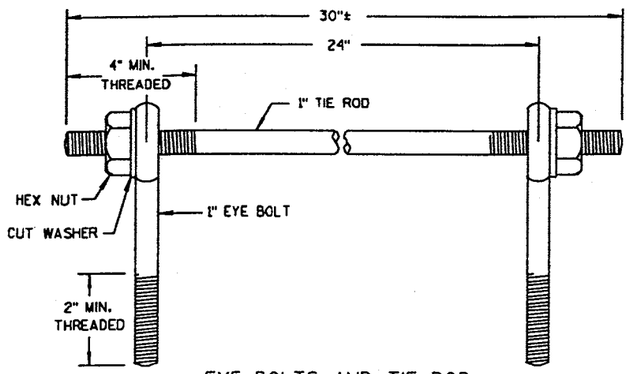

EYE BOLTS AND TIE ROD

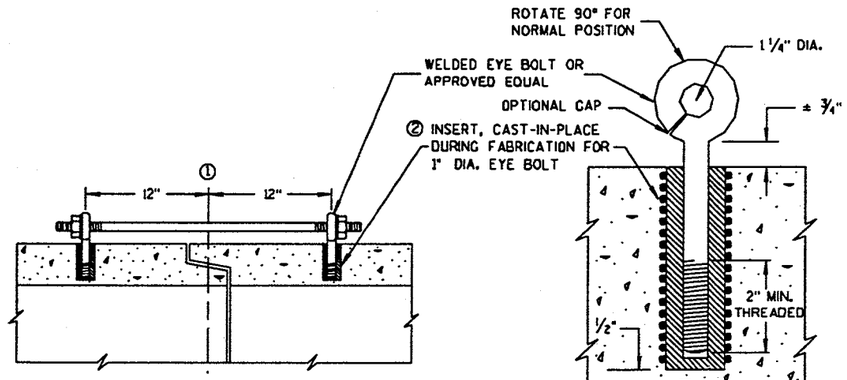

(CAST-IN-PLACE THREADED INSERT)

LONGITUDINAL SECTIONS

GENERAL NOTES

CONCRETE CULVERT PIPE SHALL BE TIED TOGETHER IN THE MANNER ILLUSTRATED BY THIS DETAIL AT LOCATIONS DESIGNATED ON THE PLAN. THE CONTRACTOR MAY USE EITHER ALTERNATE 1, 2 OR 3 FOR DRAINAGE STRUCTURES. ONLY ALTERNATE 1 AND 3 MAY BE USED FOR CATTLE PASSES. UNLESS OTHERWISE STATED IN THE CONTRACT THE MATERIALS, FABRICATION AND WORK NECESSARY TO TIE CULVERT PIPE AS INDICTED ON THE PLANS AND BY THIS DETAIL WILL BE CONSIDERED INCIDENTAL TO CULVERT PIPE, REINFORCED CONCRETE CULVERT PIPE, OR REINFORCED CONCRETE PIPE CATTLE PASS.

DETAILED DRAWINGS FOR PROPOSED ALTERNATE DESIGNS FOR JOINT TIES SHALL BE SUBMITTED TO THE ENGINEER FOR APPROVAL.

① ℄ OF TONGUE AND GROOVE OR BELL AND SPIGOT JOINTS.

② THE INSIDE OF THE THREADED INSERTS SHALL BE CLEAN TO ALLOW THE INSERTION OF THREADED EYE BOLTS.

③ HOLES SHALL BE CAST-IN-PLACE OR DRILLED 12" FROM ℄ OF TONGUE AND GROOVE.

④ BOLT PROJECTION INSIDE OF PIPE SHALL NOT EXCEED 2".

⑤ ROD DIAMETER + 1 INCH.

⑥ LENGTH ADEQUATE TO EXTEND TO WITHIN 1/2 INCH OF THE INNER SURFACE OF THE PIPE.

EYE BOLT AND TIE ROD ASSEMBLY (ALTERNATE NO. 1)

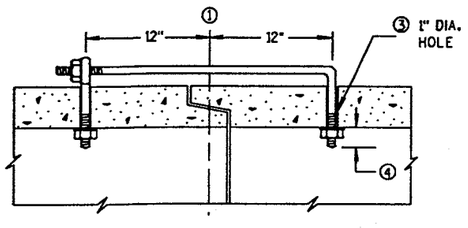

(TONGUE & GROOVE PIPE)

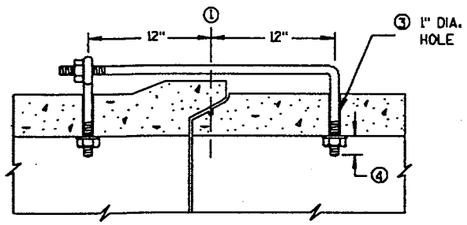

(MODIFIED BELL PIPE)

LONGITUDINAL SECTION

EYE BOLT DIMENSION TABLE

PIPE SIZE	L = LENGTH	
	TONGUE & GROOVE PIPE	MODIFIED BELL PIPE
18" TO 24"	4 1/2"	6 1/4"
30"	5"	7"
36"	5 1/2"	7"
42"	6"	
48"	6 1/2"	
60"	7 1/2"	
66"	8"	

ADJUSTABLE TIE ROD TABLE

PIPE DIAMETER	TIE ROD DIAMETER	D	L_1	N
12-60	5/8	5/8	5	1/2
66-84	3/4	3/4	5	1/2
90-108	1	1	7	1 1/16

DIMENSIONS SHOWN ARE IN INCHES

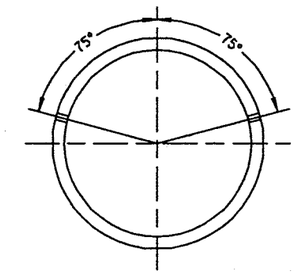

PLACEMENT OF (2) CAST-IN-PLACE INSERTS OR HOLES DURING FABRICATION FOR PIPE SECTIONS REQUIRING TIE RODS

TRANSVERSE SECTION

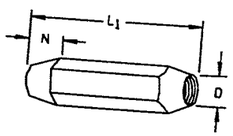

TAPERED

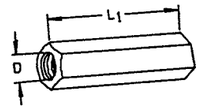

PLAIN

RIGHT AND LEFT THREADS

SLEEVE NUTS

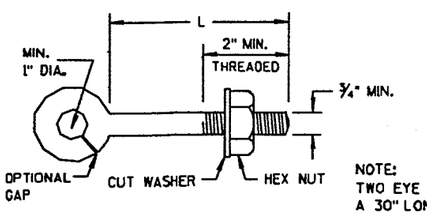

EYE BOLT

NOTE:
TWO EYE BOLTS MAY BE USED WITH A 30" LONG THREADED ROD IN LIEU OF THE 90° BENT TIE ROD.

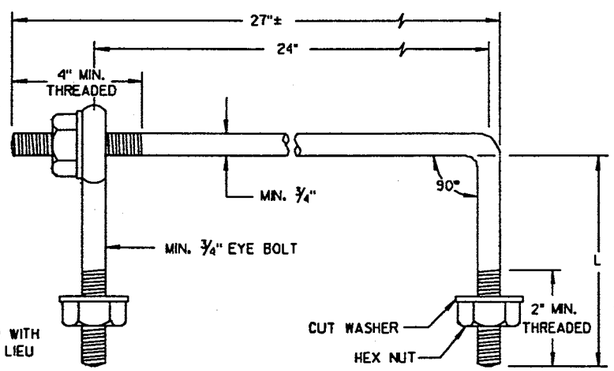

EYE BOLT AND TIE ROD

(JOINT TIES FOR 18" TO 66" DIA. CONCRETE PIPE)

EYE BOLT AND TIE ROD ASSEMBLY (ALTERNATE NO. 2)

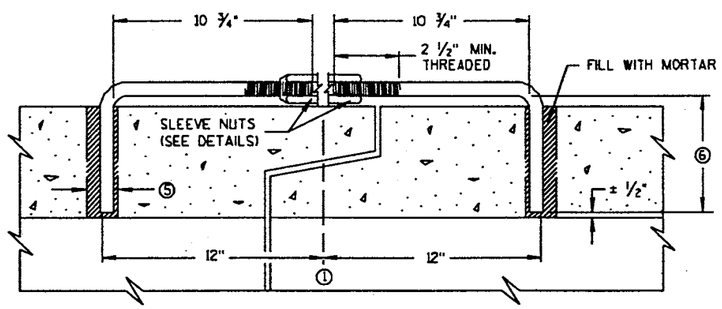

LONGITUDINAL SECTION

(JOINT TIES FOR 12" TO 108" DIA. CONCRETE PIPE)

ADJUSTABLE TIE ROD (ALTERNATE NO. 3)

DESIGN NOTE:

THE NUMBER OF PIPE TIES REQUIRED SHOULD BE INCLUDED ON THE MISCELLANEOUS QUANTITIES SHEET WITH THE CULVERT PIPE LISTING.

NOTE:
DESIGN NOTE WILL NOT APPEAR ON THE CONTRACT PLAN.

JOINT TIES FOR CONCRETE PIPE

STATE OF WISCONSIN
DEPARTMENT OF TRANSPORTATION

APPROVED

DATE — STATE DESIGN ENGINEER FOR HWYS

FHWA

S.D.D. 8 F 4-5

S.D.D. 8 F 4-5

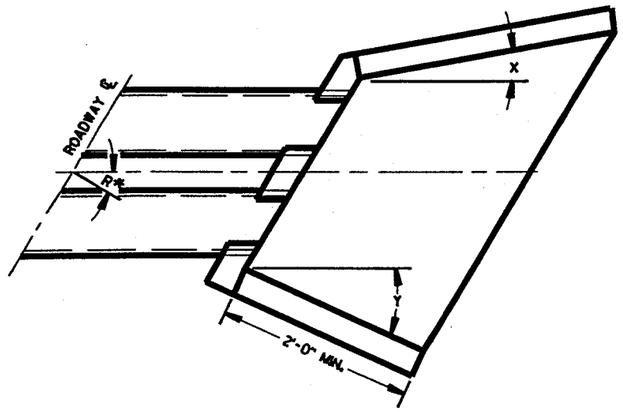

WINGWALL ANGLE DETAILS

INLET			OUTLET		
R*	X	Y	R*	X	Y
0 - 7°	30°	30°	0 - 15°	15°	15°
8 - 22°	25°	-	16 - 45°	10°	"
23 - 37°	20°	-	46 - 75°	5°	"
38 - 52°	15°	-	OVER 75°	0°	-
53 - 67°	10°	-			
68 - 82°	5°	-			
OVER 82°	0°	-			

*R = NUMBER OF DEGREES RIGHT OR LEFT HAND FORWARD

GENERAL NOTES

DETAILS OF CONSTRUCTION, MATERIALS AND WORKMANSHIP NOT SHOWN ON THIS DRAWING SHALL CONFORM TO THE PERTINENT REQUIREMENTS OF THE STANDARD SPECIFICATIONS AND THE APPLICABLE SPECIAL PROVISIONS.

FILL SLOPES FLATTER THAN 2 ½:1 SHALL BE WARPED TO MEET THE TOP OF THE WINGWALLS.

ALL STEEL REINFORCEMENT AND WELDED STEEL WIRE FABRIC SHALL BE EMBEDDED 2 INCHES CLEAR UNLESS OTHERWISE NOTED.

(1) MINIMUM REINFORCEMENT SHALL BE 6" X 6" - W4.0 X W4.0 OR NO. 3 BARS SPACED 12" C-C IN BOTH DIRECTIONS.

(2) THE SPACE BETWEEN PIPES SHALL BE AS FOLLOWS:

DIAMETER OR SPAN	SPACE
UP TO AND INCLUDING 48"	2'-0"
OVER 48" TO 72"	½ DIA. OR SPAN
OVER 72"	3'-0"

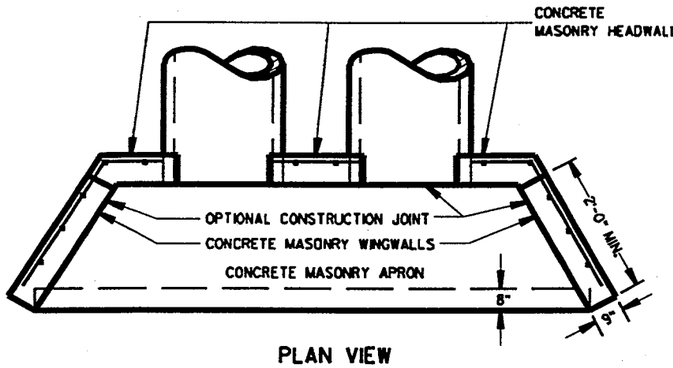

PLAN VIEW

CULVERT PIPE AND PIPE ARCH

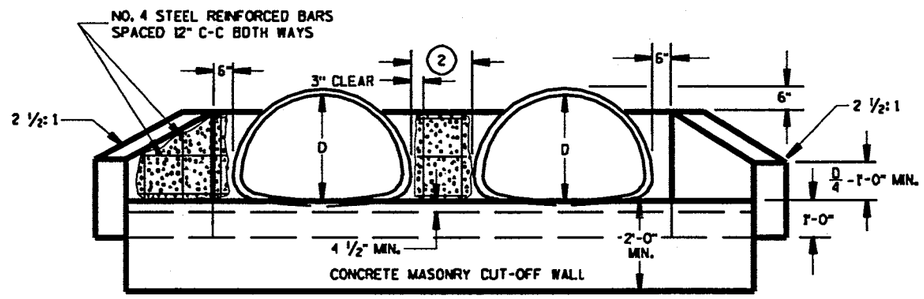

END ELEVATION

PIPE ARCH

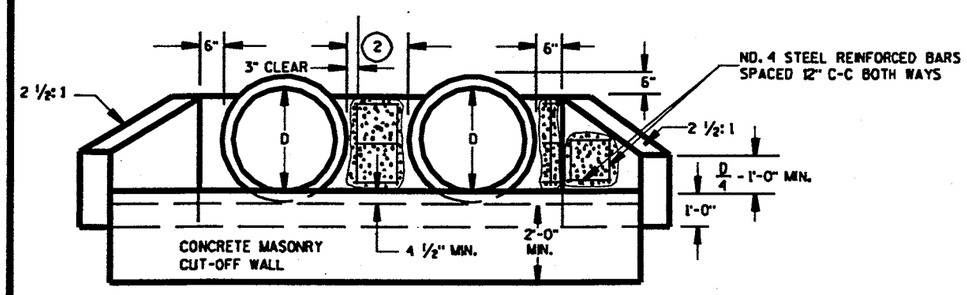

END ELEVATION

CULVERT PIPE

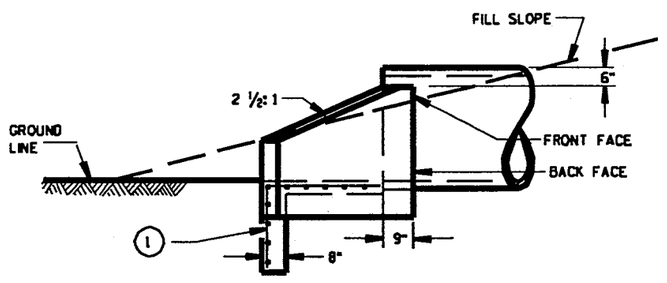

SIDE ELEVATION

CULVERT PIPE AND PIPE ARCH

CONCRETE MASONRY ENDWALLS FOR CULVERT PIPE AND PIPE ARCH

STATE OF WISCONSIN
DEPARTMENT OF TRANSPORTATION

APPROVED

DATE — CHIEF ROADWAY DEVELOPMENT ENGINEER

FHWA

S.D.D. 8 F 10-1

S.D.D. 8 F 10-1

GENERAL NOTES

Details of construction, materials and workmanship not shown on this drawing shall confors to the Standard Specifications and the applicable Special Provisions

The shaped subgrade with granular foundation is an equal alternate to the granular foundation except where rock is encountered.

(1) Where rock, hard pan or fragmented material is encountered, the trench shall be excavated below the bottom of the pipe an amount equal to $\frac{1}{4}$ inch per foot of proposed embankment above the top of the pipe, but not less than 6 inches.

(2) Trench shall be backfilled as required by Standard Specifications; Section 520 for pipe culverts and Section 607 for storm sewers.

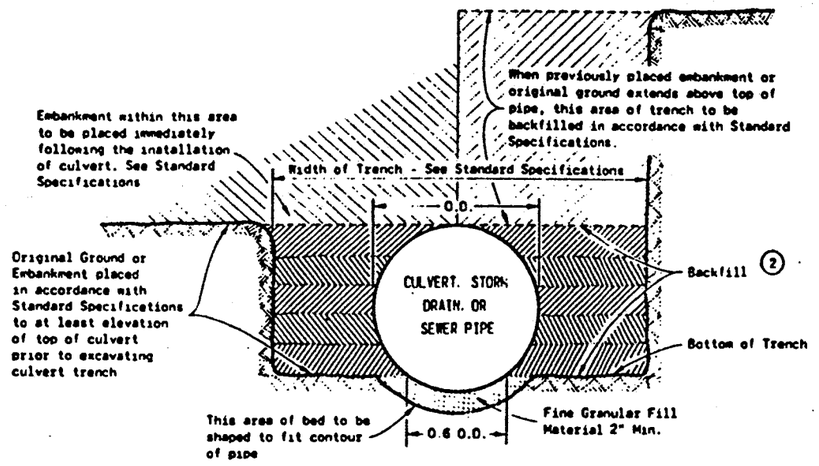

SHAPED SUBGRADE WITH GRANULAR FOUNDATION

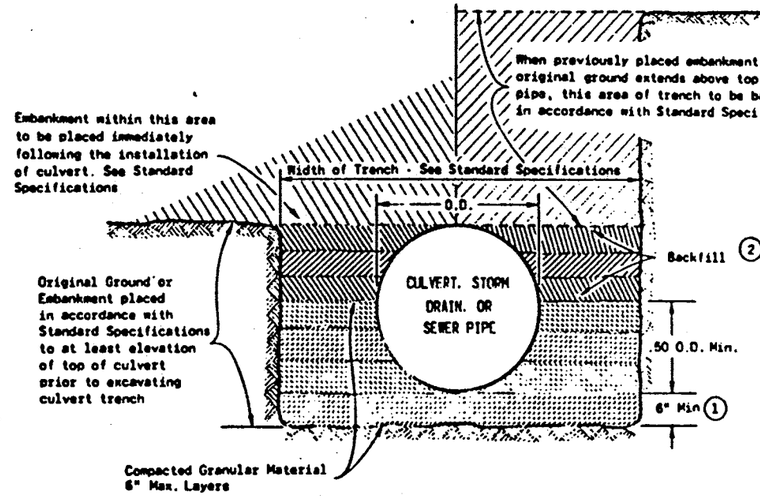

GRANULAR FOUNDATION

CLASS "B" BEDDING

CLASS "B" BEDDING FOR CULVERT PIPE OR STORM SEWER
State of Wisconsin Department of Transportation
APPROVED 4-7-83 DATE — CHIEF DESIGN ENGINEER

S.D.D. 8 F 5-1

S.D.D. 8 F 5-1

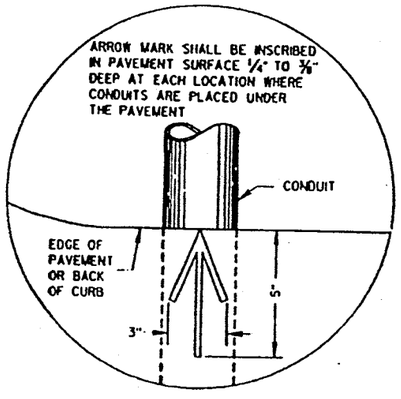

PLAN VIEW
ARROW MARK

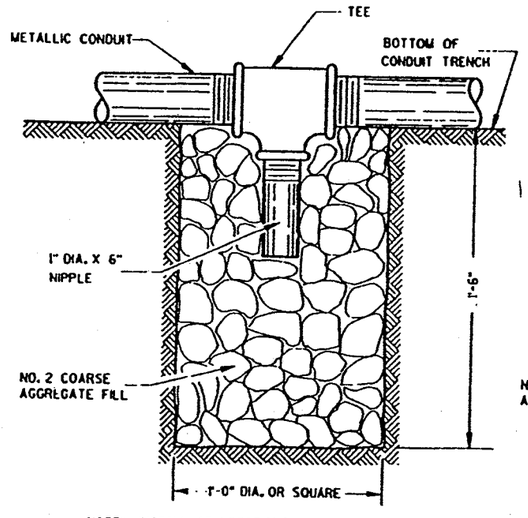

NOTE: INSTALL AT LOCATIONS WHERE METALLIC CONDUITS CANNOT BE PITCHED TO DRAIN INTO A PULL BOX.

DRAIN SUMP FOR METALLIC CONDUIT

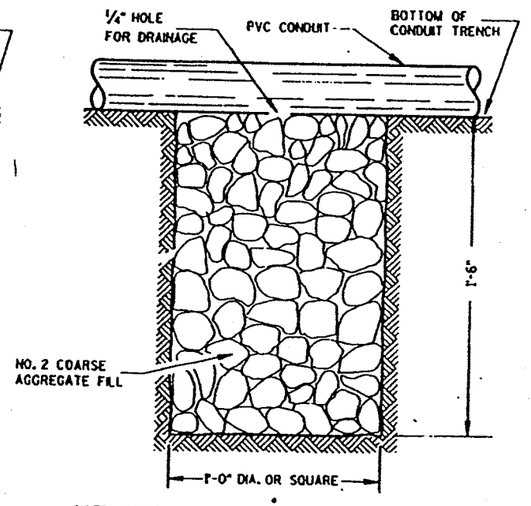

NOTE: INSTALL AT LOCATIONS WHERE PVC CONDUITS CANNOT BE PITCHED TO DRAIN INTO A PULL BOX.

DRAIN SUMP FOR PVC CONDUIT

GENERAL NOTES

DETAILS OF CONSTRUCTION, MATERIALS AND WORKMANSHIP NOT SHOWN ON THIS DRAWING SHALL CONFORM TO THE PERTINENT REQUIREMENTS OF THE CONTRACT.

METALLIC (STANDARD SPECIFICATION 652.2.2) OR NONMETALLIC (STANDARD SPECIFICATION 652.2.3) CONDUIT SHALL BE FURNISHED AND PLACED AS SHOWN.

DEPTH OF CONDUIT INSTALLED BELOW THE TRAVELED WAY SHALL BE 24 INCHES MINIMUM AND 36 INCHES MAXIMUM.

DEPTH OF CONDUIT INSTALLED THAT IS NOT BELOW THE TRAVELED WAY SHALL BE 18 INCHES MINIMUM AND 36 INCHES MAXIMUM.

ANY EXCEPTION TO THE MAXIMUM DEPTH SHALL BE ONLY WITH THE WRITTEN APPROVAL OF THE ENGINEER.

THE TRENCH SHALL NOT BE BACKFILLED PRIOR TO INSPECTION OF THE CONDUIT.

ALL METALLIC CONDUIT RACEWAY ENDS SHALL BE REAMED AND THREADED.

ALL METALLIC CONDUIT IN WHICH WIRE OR CABLE IS TO BE INSTALLED SHALL BE BUSHED WITH APPROVED THREADED BUSHINGS BEFORE INSTALLATION OF THE WIRE OR CABLE.

ALL METALLIC CONDUITS IN WHICH WIRE OR CABLE IS NOT TO BE INSTALLED SHALL BE CAPPED WITH THREADED PROTECTIVE CAPS, AS APPROVED BY THE ENGINEER.

ALL NONMETALLIC CONDUIT SHALL BE CAPPED OR PLUGGED IMMEDIATELY AFTER INSTALLATION AND SHALL REMAIN CAPPED OR PLUGGED UNTIL WIRE/CABLES ARE INSTALLED.

NONMETALLIC CONDUITS IN WHICH WIRE OR CABLE IS NOT BEING INSTALLED SHALL REMAIN CAPPED OR PLUGGED.

BENDING OF PVC ELECTRICAL CONDUIT SHALL BE ACCOMPLISHED BY USING A BLANKET OR EMERSION TYPE TANK DESIGNED FOR THE PURPOSE OF BENDING PVC ELECTRICAL CONDUIT.

ALL CUT ENDS SHALL BE TRIMMED INSIDE AND OUTSIDE TO REMOVE ALL ROUGH EDGES ON NONMETALLIC CONDUIT. (SEE NEC 347.5)

WHEN REQUIRED TO CONNECT NONMETALLIC CONDUIT TO METALLIC CONDUIT, ONLY U.L. LISTED ADAPTER FITTINGS SHALL BE USED.

PRIOR TO CONDUIT ACCEPTANCE, CONDUIT CAPS OR PLUGS SHALL BE REMOVED, AND THE CAPS, PLUGS AND CONDUIT ENDS SHALL BE THOROUGHLY CLEANED AND THEN THE CAPS OR PLUGS REINSTALLED TO ENSURE THAT THE CAPS OR PLUGS CAN BE EASILY REMOVED IN THE FUTURE.

ALL CONDUIT BEING FURNISHED AND INSTALLED SHALL HAVE THE U.L. LABEL FIRMLY ATTACHED.

CONDUIT RUNS SHALL BE THE SAME SIZE OF CONDUIT FROM ONE END TO THE OTHER (FROM PULL BOX TO PULL BOX-OR-JUNCTION BOX TO JUNCTION BOX-OR-BASE TO BASE, ETC.).

POLY ROPE OR A PULL WIRE SHALL BE INSTALLED AS STATED IN THE STANDARD SPECIFICATION, ITEM 652.3.11.

ALL CONDUIT RUNS SHALL BE STRAIGHT (WITHOUT BENDS) FROM PULL BOX TO PULL BOX, PULL BOX TO BASE AND BASE TO BASE AS SHOWN ON THE PLANS UNLESS OTHERWISE APPROVED BY THE PROJECT ENGINEER.

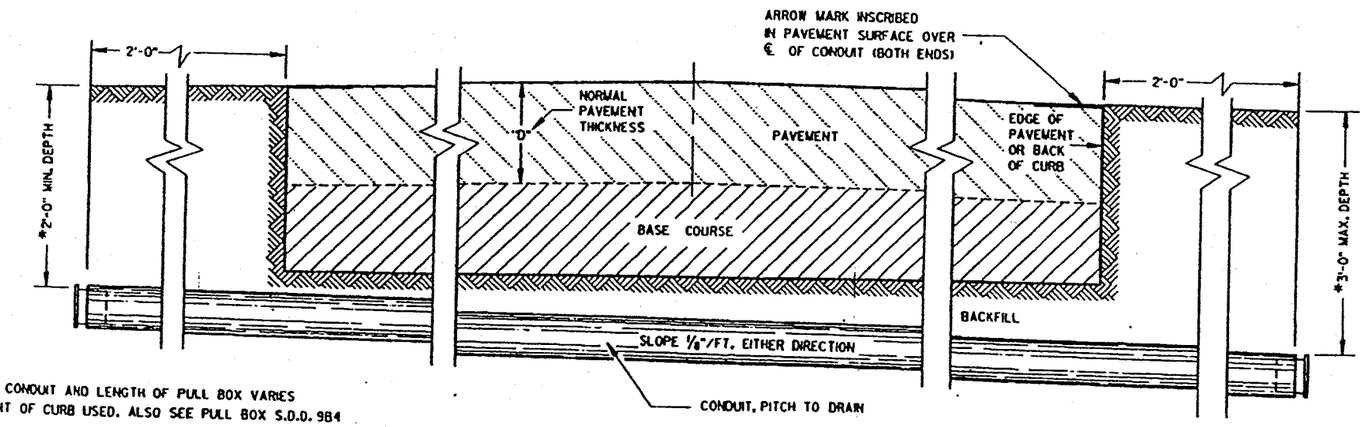

*DEPTH OF CONDUIT AND LENGTH OF PULL BOX VARIES WITH HEIGHT OF CURB USED. ALSO SEE PULL BOX S.D.D. 9B4

SIDE ELEVATION
DETAIL FOR CONDUIT UNDER PAVED HIGHWAYS

CONDUIT
STATE OF WISCONSIN DEPARTMENT OF TRANSPORTATION
APPROVED 10/21/96 DATE FHWA STATE ELECTRICAL ENGINEER FOR HIGHWAYS

S.D.D. 9 B 2-6

S.D.D. 9 B 2-6

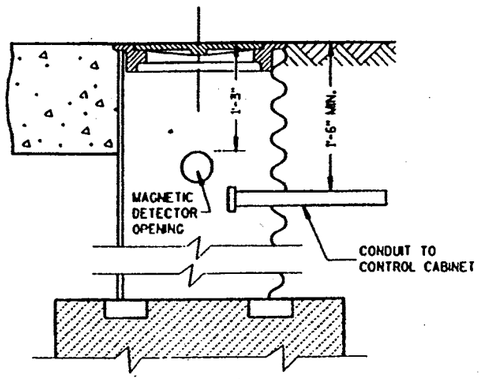

DETECTOR INSTALLATION AT PULL BOX

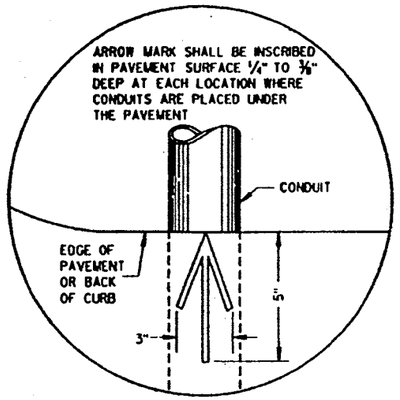

PLAN VIEW
ARROW MARK

GENERAL NOTES

DETAILS OF CONSTRUCTION, MATERIALS AND WORKMANSHIP NOT SHOWN ON THIS DRAWING SHALL CONFORM TO THE PERTINENT REQUIREMENTS OF THE CONTRACT.

ONLY NONMETALLIC CONDUIT SHALL BE FURNISHED AND SHALL BE PLACED AS SHOWN.

(1) PRIOR TO BACKFILLING, THE CAPS OR PLUGS SHALL BE REMOVED, AND THE CAPS, PLUGS AND CONDUIT ENDS SHALL BE THOROUGHLY CLEANED AND THEN REINSTALLED TO ASSURE THAT THE CAPS OR PLUGS CAN BE EASILY REMOVED IN THE FUTURE.

PRIOR TO INSTALLATION OF A MAGNETIC DETECTOR, THE PLUG OR CAP SHALL BE REMOVED AND AN END BELL (U.L. LISTED FOR ELECTRICAL USE) INSTALLED.

THE STANDARD DETAIL DRAWING "CONDUIT", 982 SHALL APPLY TO THIS DRAWING.

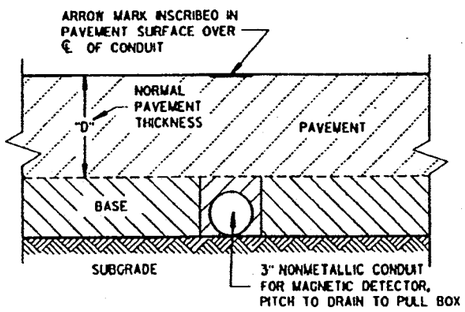

END ELEVATION
MAGNETIC DETECTOR CONDUIT

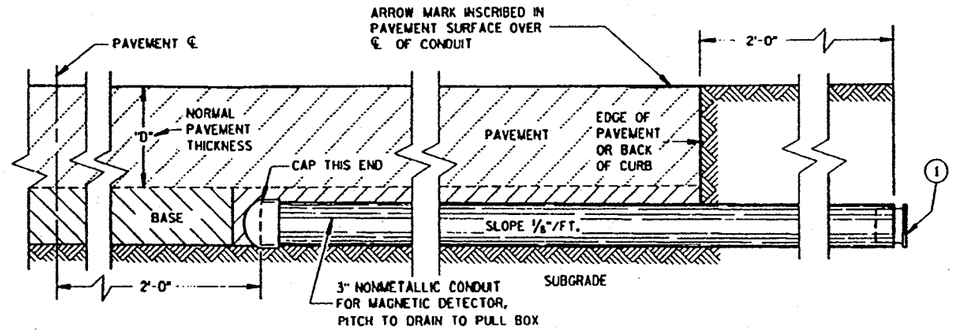

SIDE ELEVATION
MAGNETIC DETECTOR CONDUIT FOR UNDIVIDED HIGHWAYS

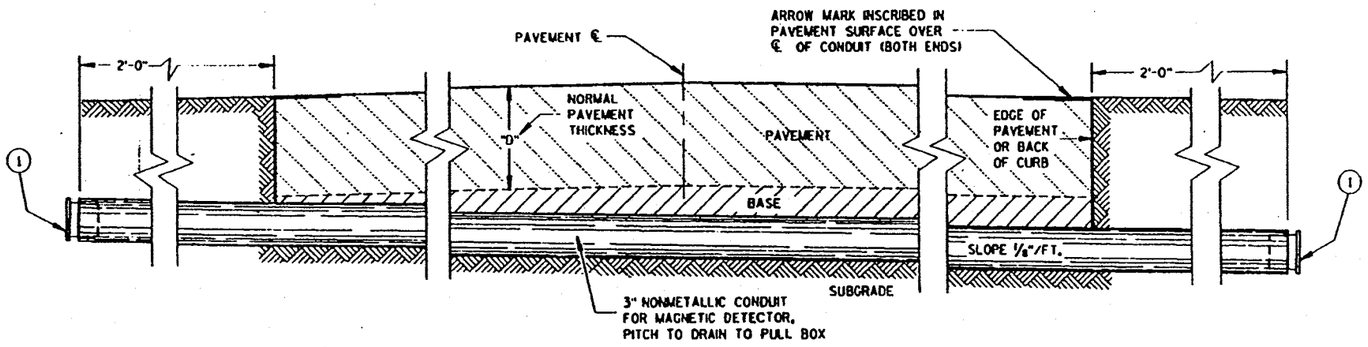

SIDE ELEVATION
MAGNETIC DETECTOR CONDUIT FOR DIVIDED HIGHWAYS

CONDUIT FOR MAGNETIC DETECTOR

STATE OF WISCONSIN
DEPARTMENT OF TRANSPORTATION

APPROVED
10/21/96
DATE
STATE ELECTRICAL ENGINEER FOR HIGHWAYS
FHWA

S.D.D. 9 B 3-2

S.D.D. 9 B 3-2

TABLE OF NOMINAL DIMENSIONS AND WEIGHTS

DIMENSION IN INCHES		TYPE OF PIPE									
		CORRUGATED STEEL									POLYETHYLENE SDR 32.5
PIPE DIAMETER (INSIDE)	A	12	12	12	18	18	18	24	24	24	12
PIPE LENGTH **	B	24	30	36	24	30	36	36	42	48	24
WALL THICKNESS	C	0.064	0.064	0.064	0.064	0.064	0.064	0.064	0.064	0.064	0.4
COVER	D	10 1/4	10 1/4	10 1/4	16 1/4	16 1/4	16 1/4	22 1/4	22 1/4	22 1/4	10 1/4
FRAME	E	14 1/2	14 1/2	14 1/2	20 1/2	20 1/2	20 1/2	26 1/2	26 1/2	26 1/2	14 1/2
FRAME	F	8 1/2	8 1/2	8 1/2	14 1/2	14 1/2	14 1/2	20 1/2	20 1/2	20 1/2	8 1/2
FRAME	G	11 1/2	11 1/2	11 1/2	17 1/2	17 1/2	17 1/2	23 1/2	23 1/2	23 1/2	11 1/2
WEIGHT IN POUNDS *											
FRAME AND COVER		60	60	60	110	110	110	155	155	155	60

* THE ACTUAL WEIGHT OF THE MANHOLE FRAME AND COVER MAY VARY WITHIN 5 PERCENT PLUS OR MINUS OF THE WEIGHTS SHOWN.

** NORMALLY USED LENGTHS. THE PROJECT ENGINEER SHALL DETERMINE IF PIPE LENGTHS, OTHER THAN THOSE SPECIFIED, SHALL BE USED, TO A MAXIMUM OF 48" (CONTINUOUS LENGTH, NON-SPLICED). THE ADDITIONAL LENGTH SHALL BE INCIDENTAL TO THE PULL BOX BID PRICE.

GENERAL NOTES

DETAILS OF CONSTRUCTION, MATERIALS AND WORKMANSHIP NOT SHOWN ON THIS DRAWING SHALL CONFORM TO THE PERTINENT REQUIREMENTS OF THE CONTRACT.

ALL FRAMES AND COVERS SHALL BE HEAVY DUTY TYPE, SUITABLE FOR VEHICULAR TRAFFIC LOADS.

PULL BOXES LOCATED IN THE ROADWAYS SHALL HAVE LOCKING COVERS.

ENTRANCE HOLES INTO PULL BOXES SHALL BE CUT WITH A CIRCULAR HOLE SAW OR HYDRAULIC CONDUIT PUNCH. HOLE SIZE SHALL BE THE OUTSIDE DIAMETER OF THE CONDUIT THAT IS TO FIT IN THE OPENING PLUS NO MORE THAN 1/4".

THE CONTRACTOR SHALL NOT INSTALL WIRE IN ANY PULL BOX UNTIL ITS INSTALLATION HAS BEEN INSPECTED AND ACCEPTED BY THE ENGINEER.

GROUNDING LUGS (MECHANICAL CONNECTORS) SHALL BE U.L. LISTED AND APPROVED FOR USE WITH COPPER WIRE. THE MECHANICAL CONNECTION (INSIDE AND OUTSIDE) TO THE PULL BOX, SHALL BE TOTALLY AND PERMANENTLY SEALED WITH A SILICONE OR RUBBERIZED CAULKING COMPOUND AS APPROVED BY THE ENGINEER.

GROUNDING LUGS ARE NOT REQUIRED IN PULL BOXES WHEN VOLTAGES OF LESS THAN 50 VOLTS AC ARE THE ONLY VOLTAGES ENCOUNTERED IN THE BOXES.

DRAIN DUCT SHALL BE MEASURED AND PAID FOR SEPARATELY.

RODENT WIRE SCREEN SHALL BE 1/8" STAINLESS STEEL MESH AND BE INSTALLED WITH A STAINLESS STEEL HOSE CLAMP OF SUFFICIENT SIZE.

ALL METALLIC CONDUIT IN WHICH WIRE AND/OR CABLE IS TO BE INSTALLED, SHALL BE BUSHED BEFORE INSTALLATION OF THE WIRE AND/OR CABLE.

S.D.D. 982, "CONDUIT", APPLIES TO THIS DRAWING.

WHEN PULL BOXES ARE INSTALLED FOR FUTURE USE, DO NOT INSTALL THE EQUIPMENT GROUNDING LUG. THE EQUIPMENT GROUNDING LUG, THE EQUIPMENT GROUNDING ELECTRODE AND THE EQUIPMENT GROUNDING CONDUCTOR SHALL BE REQUIRED AND INSTALLED UNDER A FUTURE WIRING CONTRACT.

IF PULL BOX EQUIPMENT GROUNDING IS REQUIRED USING AN EQUIPMENT GROUNDING ELECTRODE IN EACH PULL BOX, THE EQUIPMENT GROUNDING ELECTRODE SHALL BE 5/8" X 8'-0", COPPERCLAD AND BE EXOTHERMICALLY WELDED TO A #4 AWG, COPPER, STRANDED WIRE (BARE OR GREEN INSULATED). THE #4 AWG WIRE SHALL BE 4 FEET IN LENGTH, NEATLY COILED, TAPED AND AVAILABLE FOR USE WHEN REQUIRED.

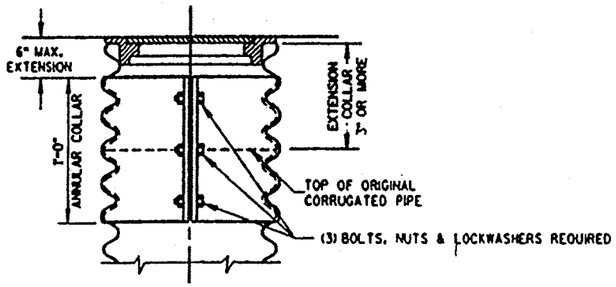

CORRUGATED PIPE EXTENDER

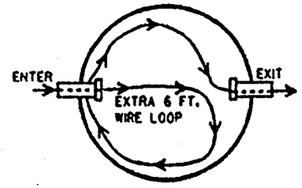

ILLUSTRATION OF WIRE/CABLE PLACEMENT IN PULLBOX

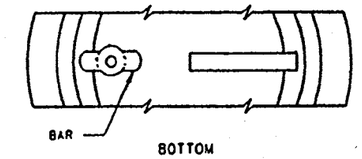

ALTERNATE COVER (LOCKING)

TIGHTENING BAR TYPE

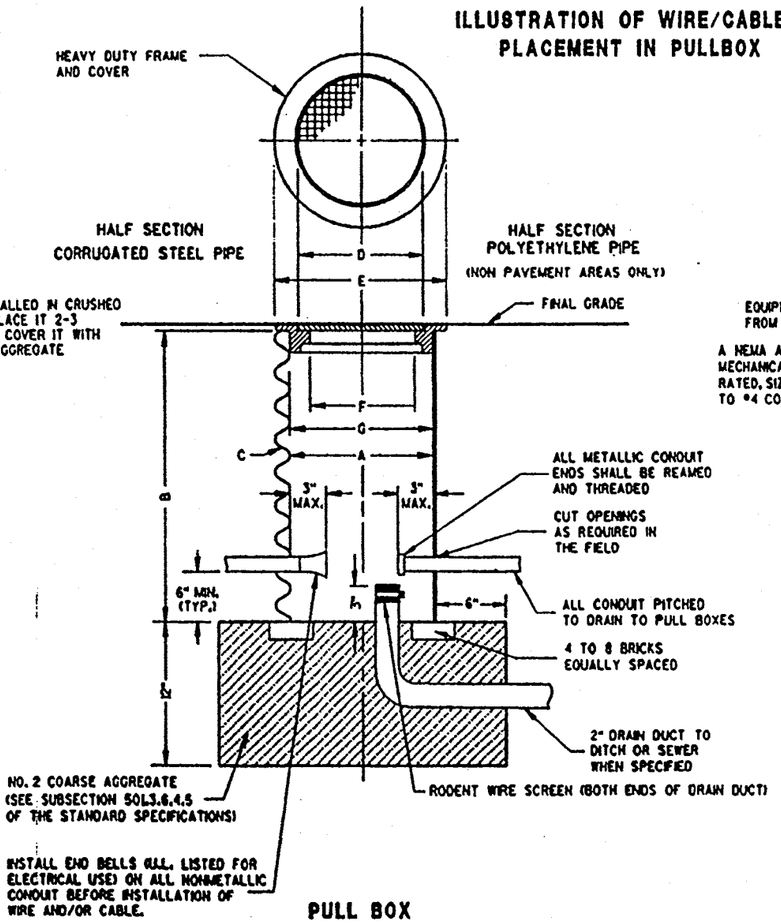

PULL BOX

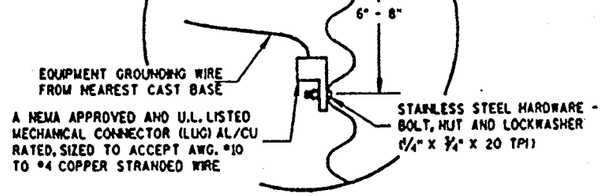

EQUIPMENT GROUNDING LUG AND LOCATION IN STEEL PULL BOXES

PULL BOX

STATE OF WISCONSIN
DEPARTMENT OF TRANSPORTATION

APPROVED 6/11/64
DATE
STATE ELECTRICAL ENGINEER FOR HIGHWAYS
FHWA

S.D.D. 9 B 4-5

S.D.D. 9 B 4-5

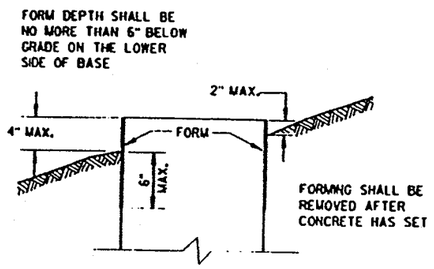

FORMING DETAIL

QUANTITY REQUIREMENTS	CONCRETE BASE TYPE		
	1	2	5
APPROX. CUBIC YARDS OF CONCRETE	0.40	0.57	0.40
LBS. OF HOOP BAR STEEL	NONE	23	16
LBS. OF VERTICAL BAR STEEL	NONE	60	18

GENERAL NOTES

DETAILS OF CONSTRUCTION, MATERIALS AND WORKMANSHIP NOT SHOWN ON THIS DRAWING SHALL CONFORM TO THE PERTINENT REQUIREMENTS OF THE CONTRACT.

BASES SHALL BE EXCAVATED BY USE OF A CIRCULAR AUGER.

TOP SURFACES OF CONCRETE BASES SHALL BE TROWEL FINISHED AND LEVEL.

CONDUIT SIZES AND LOCATIONS SHALL BE AS SHOWN ON THE PLANS.

THE FINAL OR TERMINATING CONCRETE BASE IN A CONDUIT RUN SHALL HAVE A 6" EXIT STUB INSTALLED FOR FUTURE CABLING USE. THE EXIT STUB SHALL BE SIZED AS USED THROUGHOUT THE CONDUIT RUN AS SHOWN AT THE ENTRANCE OF THE BASE.

MINIMUM BENDING RADIUS OF CONDUIT IS EQUAL TO 6 X THE DIAMETER.

CONDUIT HEIGHT ABOVE CONCRETE BASES SHALL BE 1 INCH. ALL METALLIC CONDUIT ENDS SHALL BE REAMED AND THREADED.

ALL CONDUIT ENDS AT THE TOP OF CONCRETE BASES SHALL BE CAPPED IF METALLIC OR PLUGGED IF NONMETALLIC IMMEDIATELY AFTER PLACEMENT AND BEFORE CONCRETE IS POURED. CONDUITS IN WHICH WIRE OR CABLE IS NOT INSTALLED SHALL REMAIN CAPPED OR PLUGGED.

GENERAL NOTES (CONTINUED)

BELL ENDS SHALL BE INSTALLED ON ALL PVC CONDUIT EXPOSED AT THE TOP OF CONCRETE BASES BEFORE INSTALLATION OF CABLE OR WIRE.

ENDS OF CONDUIT INSTALLED BELOW GRADE FOR FUTURE USE SHALL BE CAPPED IF METALLIC OR PLUGGED IF NONMETALLIC.

WHEN REQUIRED TO CONNECT NONMETALLIC CONDUIT TO METALLIC CONDUIT, ONLY ADAPTER FITTINGS, U.L. LISTED FOR ELECTRICAL USE, SHALL BE USED.

IF A BASE REQUIRES A DEEP FORM BECAUSE OF LOOSE DIRT OR FILL, THE FORM SHALL BE REMOVED BEFORE BACKFILLING AROUND THE BASE. BACKFILL SHALL BE TAMPED TIGHT AGAINST THE BARE CONCRETE BASE IN LAYERS OF 1 FOOT OR LESS.

A NO. 4 AWG, STRANDED COPPER EQUIPMENT GROUNDING CONDUCTOR SHALL BE EXOTHERMICALLY WELDED TO THE EQUIPMENT GROUNDING ELECTRODE (GROUND ROD) FOR TYPE 2 AND TYPE 5 BASES.

THE EQUIPMENT GROUNDING CONDUCTOR SHALL BE FURNISHED AND INSTALLED TO ENTER THE BASE OF THE TYPE 2 AND TYPE 5 BASES THROUGH A 1 INCH CONDUIT INSTALLED FOR GROUNDING PURPOSES, LEAVING A 4 FOOT COIL OF WIRE ABOVE THE CONCRETE BASE. THE EQUIPMENT GROUNDING CONDUCTOR SHALL BE NEATLY COILED AND THE COILS TIED TOGETHER.

ANCHOR RODS SHALL BE THREADED 12" IN LENGTH ON EACH END OF THE ROD. ANCHOR RODS SHALL BE MANUFACTURED IN ACCORDANCE WITH SECTION 654.2.1 AND 641.2.2 OF THE STANDARD SPECIFICATIONS, ASTM A-449, OR ASTM A-687 (GRADE 105).

WASHERS AND LOCK WASHERS ARE REQUIRED ON ALL ANCHOR RODS.

WHEN ANCHOR RODS USING THE ALTERNATE "L" BEND ARE FURNISHED, THE 4" "L" BEND SHALL BE IN ADDITION TO THE SPECIFIED ANCHOR ROD BAR LENGTH. THE "L" BEND END SHALL NOT BE THREADED.

WELDING OF THE ANCHOR RODS TO THE CAGE IS UNACCEPTABLE. TIE WIRES SHALL BE USED.

BAR STEEL REINFORCEMENT SHALL BE COATED WITH POWERED EPOXY RESIN IN ACCORDANCE WITH SECTION 505 OF THE STANDARD SPECIFICATIONS (LATEST EDITION).

(1) THE MINIMUM DEPTH OF CONDUIT EXITING THE CONCRETE BASE AND INSTALLED BELOW THE TRAVELED WAY SHALL BE 24 INCHES. THE MINIMUM DEPTH OF CONDUIT EXITING THE CONCRETE BASE THAT IS NOT INSTALLED BELOW THE TRAVELED WAY SHALL BE 18 INCHES. THE MAXIMUM DEPTH OF ALL CONDUIT SHALL BE 36 INCHES EXCEPT WITH WRITTEN APPROVAL BY THE ENGINEER.

(2) (4) 1" DIA. X 3'-6" ANCHOR RODS.

(3) (4) 1" DIA. X 5'-0" ANCHOR RODS.

(4) (6) NO. 6 X 6'-8" BAR STEEL REINFORCEMENT.

(5) (7) NO. 4 X 5'-1" BAR STEEL REINFORCEMENT @ 1'-0" C-C.

(6) (4) 1" DIA. X 3'-6" ANCHOR RODS.

(7) (6) NO.4 X 4'-8" BAR STEEL REINFORCEMENT

(8) (5) NO. 4 X 5'-1" BAR STEEL REINFORCEMENT @ 1'-0" C-C.

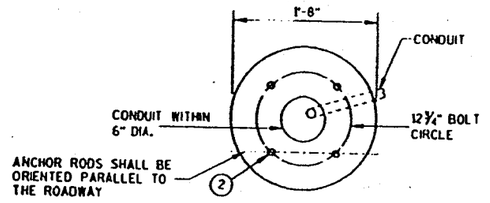

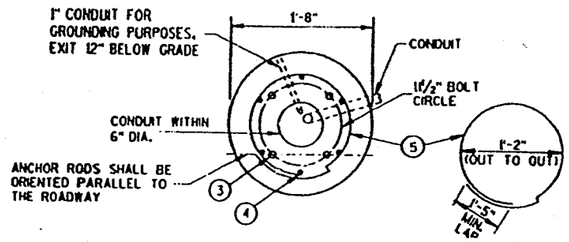

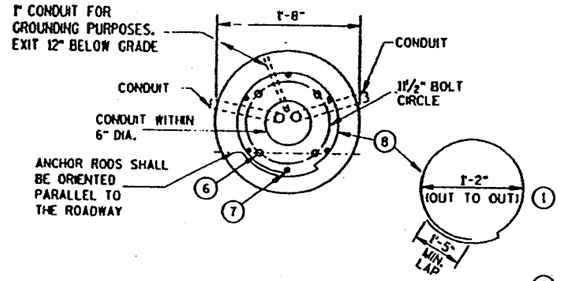

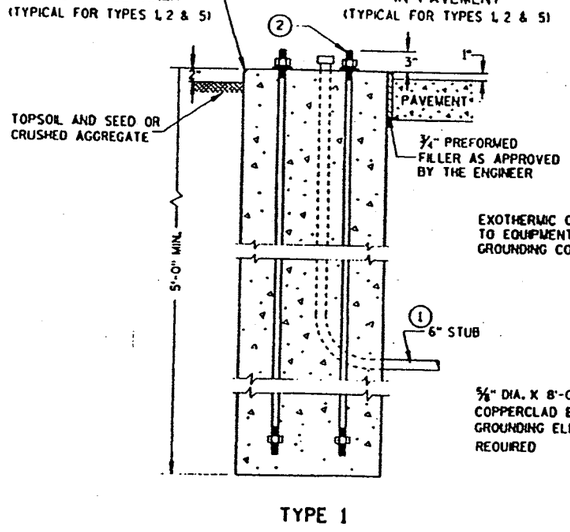

TYPE 1

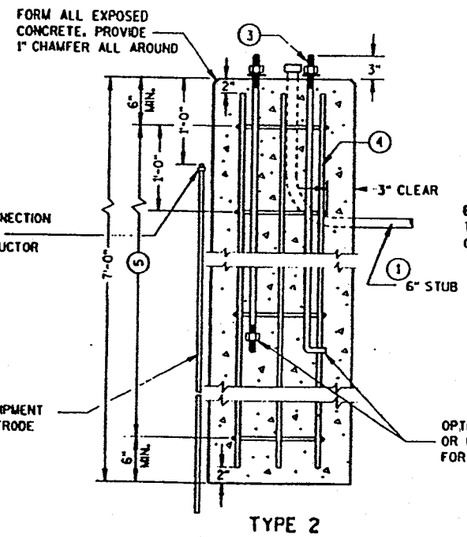

TYPE 2

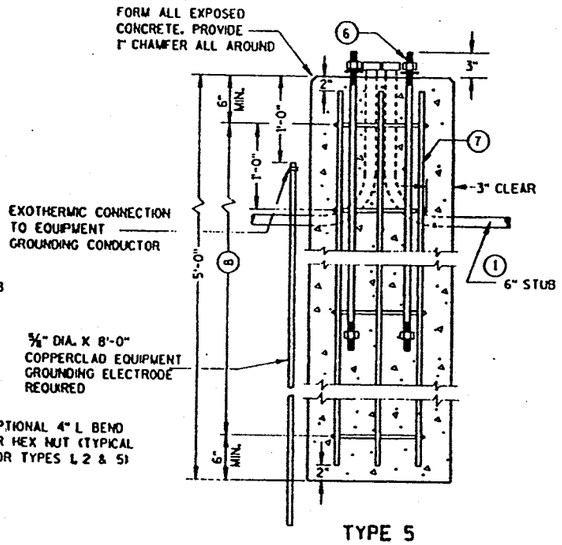

TYPE 5

CONCRETE BASES

CONCRETE BASES,
TYPES 1, 2 & 5

STATE OF WISCONSIN
DEPARTMENT OF TRANSPORTATION

APPROVED 10/21/94 DATE
FHWA
STATE ELECTRICAL ENGINEER FOR HIGHWAYS

S.D.D. 9 C 2-2

S.D.D. 9 C 2-2

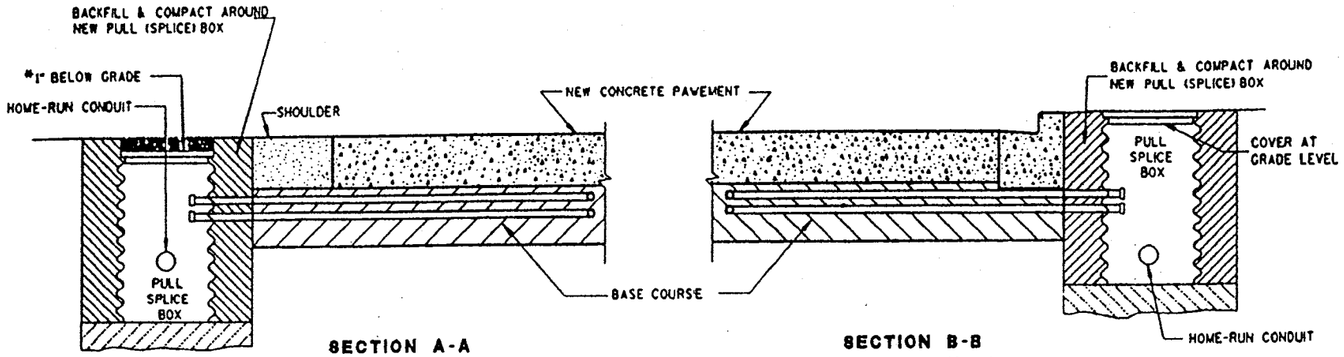

SECTION A-A
NO CURB & GUTTER

SECTION B-B
CURB & GUTTER

*RECESS PULL (SPLICE) BOX SO THAT THE COVER IS 3" BELOW GRADE IN SHOULDER AREAS OF CRUSHED AGGREGATE. BACKFILL OVER COVER WITH THE CRUSHED AGGREGATE TO BRING THE AREA TO GRADE LEVEL.

LOOP DETECTOR INSTALLATION DETAIL

GENERAL NOTES

DETAILS OF CONSTRUCTION, MATERIALS AND WORKMANSHIP NOT SHOWN ON THIS DRAWING SHALL CONFORM TO THE PERTINENT REQUIREMENTS OF THE CONTRACT.

LOOP SIZE, CONFIGURATION LOCATION, NUMBER OF TURNS OF WIRE AND ASSOCIATED SIGNAL PHASE SHALL BE AS SHOWN ON THE PLANS.

PITCH LEAD OUT CONDUIT TO DRAIN TO ROADSIDE PULL (SPLICE) BOX.

SPLICES SHALL BE INSTALLED BY USING CAST IN PLACE SPLICE KITS SUCH AS 3M TYPE 82A1 OR APPROVED EQUAL. NON-INSULATED BUTT SPLICES TO FIT #12 AWG STRANDED WIRE SHALL BE USED. SPLICES SHALL BE SOLDERED AND INSULATED FROM EACH OTHER AS PER INSTRUCTIONS INCLUDED IN THE SPLICE KIT.

THE GROUND RESISTANCE READING OF THE LOOP SHALL READ "INFINITY" TO GROUND ON AN OHMMETER USING A MULTIPLIER SCALE OF 1 MEGOHM AND AN INPUT RESISTANCE OF 11 MEGOHMS MINIMUM BEFORE SPLICING THE LOOP TO THE LEAD-IN CABLE.

AFTER SPLICING THE LOOP WIRE TO THE LOOP LEAD-IN CABLE, THE CONTRACTOR SHALL MEASURE INDUCTANCE, GROUND RESISTANCE AND WIRE RESISTANCE AT THE CABINET END OF THE LEAD-IN CABLE AND FURNISH A COPY OF THE READINGS TO THE PROJECT ENGINEER FOR EVALUATION.

LOOP DETECTOR LEADS SHALL BE IDENTIFIED WITH THEIR ASSOCIATED LOOP BY USE OF WATERPROOF TAGS AT BOTH ENDS OF THE CABLE. A LISTING OF THE CABLE IDENTIFICATION PER INDIVIDUAL LOOP LEAD-IN SHALL BE PLACED IN THE CABINET.

THE #12 AWG. LOOP WIRE IN THE PULL (SPLICE) BOX SHALL BE HAND TWISTED AT LEAST 3 TWISTS PER FOOT BEFORE BEING SPLICED TO THE LOOP LEAD-IN CABLE.

SPLICES OF LOOP WIRE TO LEAD-IN CABLE SHALL BE MADE ONLY IN PULL (SPLICE) BOXES AT THE SIDE OF THE ROAD.

THE #12 AWG LOOP WIRE SHALL BE INSTALLED FROM THE ROADSIDE PULL (SPLICE) BOX, THROUGH THE LOOP CONDUIT, BACK TO THE ROADSIDE PULL (SPLICE) BOX, AND BE INSTALLED IN ONE, NON-SPLICED CONTINUOUS LENGTH.

PROTECTION OF THE CONDUITS IN THE BASE COURSE SHALL BE REQUIRED AFTER INSTALLATION AND BEFORE NEW PAVEMENT IS INSTALLED.

SHOULD INSTALLATION REPAIR BE REQUIRED, IT SHALL BE DONE UNDER THE DIRECTION OF THE PROJECT ENGINEER.

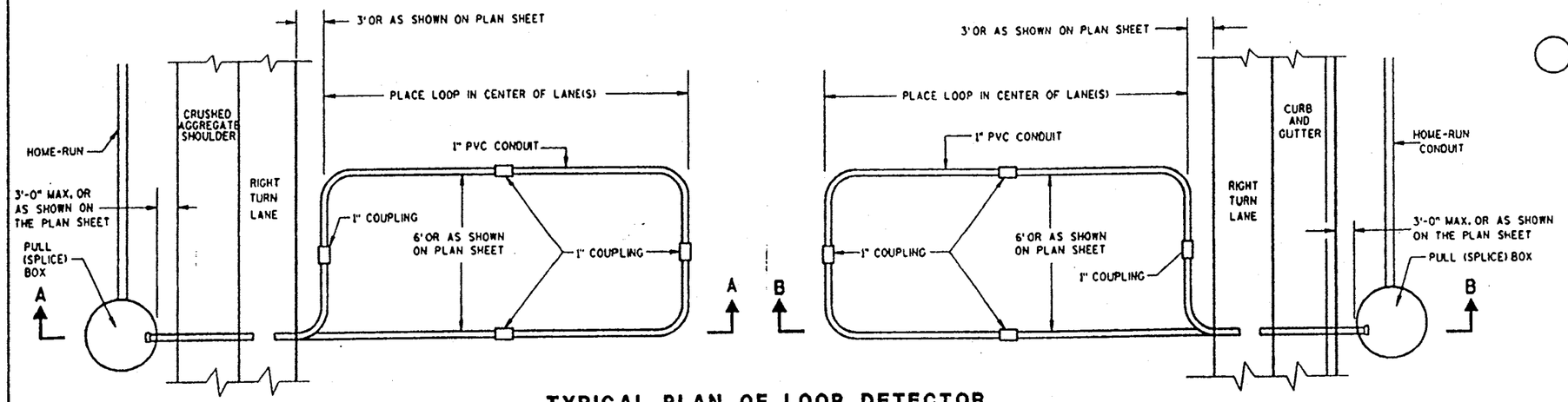

TYPICAL PLAN OF LOOP DETECTOR WITH 24" PULL (SPLICE) BOX

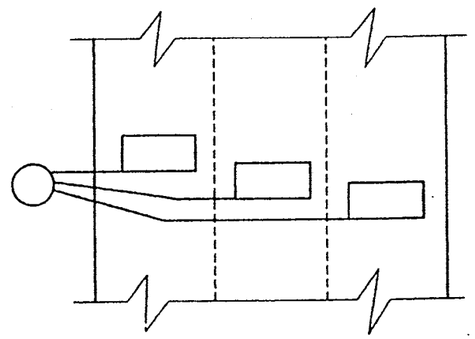

MULTI-LANE INSTLLATION

LOOP DETECTOR INSTALLED IN BASE COURSE WITH PULL (SPLICE) BOX OFF ROADWAY (OPTION 2)

STATE OF WISCONSIN
DEPARTMENT OF TRANSPORTATION

APPROVED _____ DATE
FHWA

_____ STATE ELECTRICAL ENGINEER FOR HIGHWAYS

S.D.D. 9 F 15-1b

S.D.D. 9 F 15-1b

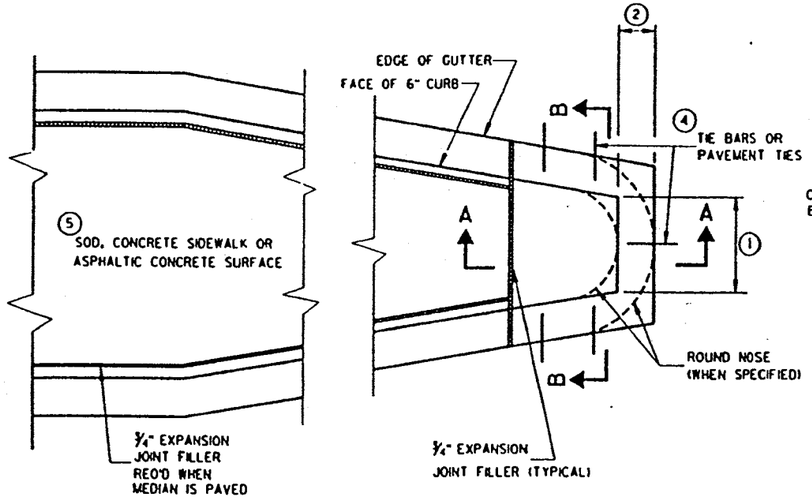

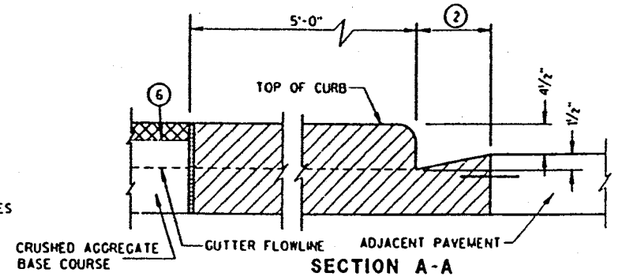

SECTION A-A

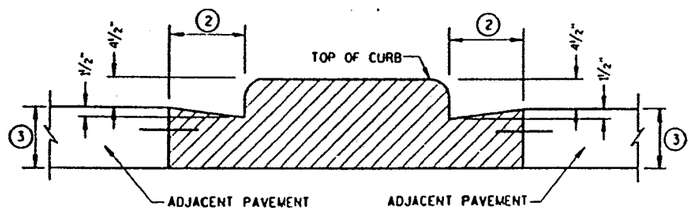

SECTION B-B

GENERAL NOTES

DETAILS OF CONSTRUCTION, MATERIALS AND WORKMANSHIP NOT SHOWN ON THIS DRAWING SHALL CONFORM TO THE PERTINENT REQUIREMENTS OF THE STANDARD SPECIFICATIONS AND THE APPLICABLE SPECIAL PROVISIONS.

1. SEE PLAN FOR MEDIAN NOSE WIDTH AND RADIUS (FOR ROUND NOSE ALTERNATE).
2. WIDTH OF GUTTER TO MATCH EXISTING ADJACENT GUTTER OR AS SPECIFIED ELSEWHERE IN THE PLAN.
3. DEPTH EQUAL TO ADJACENT PAVEMENT. ADJACENT PAVEMENT STRUCTURE DETAILS ARE SHOWN ON THE PLAN. TYPICAL OPTIONS ARE:
   (1) NEW OR EXISTING CONCRETE PAVEMENT.
   (2) ASPHALTIC CONCRETE PAVEMENT OVER NEW OR EXISTING CONCRETE BASE COURSE.
   (3) ASPHALTIC CONCRETE PAVEMENT OVER CRUSHED AGGREGATE BASE COURSE.
4. TIE BARS OR PAVEMENT TIES REQUIRED IN NEW CONCRETE PAVEMENT OR CONCRETE BASE COURSE. TIE BARS SHALL BE NO. 4 X 2'-0" SPACED AT 2'-0" C-C.

   PAVEMENT TIES REQUIRED IN EXISTING CONCRETE BASE COURSE. PAVEMENT TIES SHALL BE NO. 6 X 1'-0" SPACED AT 3'-0" C-C INSTALLED ON A HORIZONTAL SKEW OF 6:1. THE DIRECTION OF SKEW SHALL ALTERNATE AFTER EVERY ONE OR TWO BARS.
5. SURFACE TYPE AND DETAILS ARE SHOWN ELSEWHERE IN THE PLAN.

CONCRETE MEDIAN BLUNT NOSE DETAIL

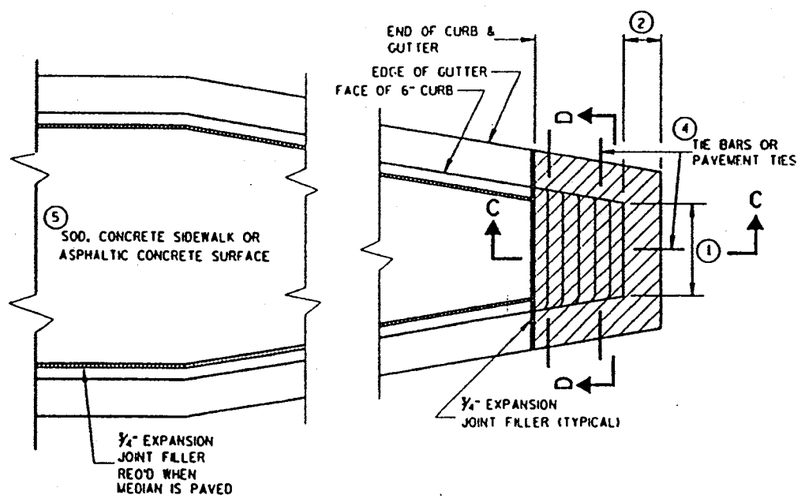

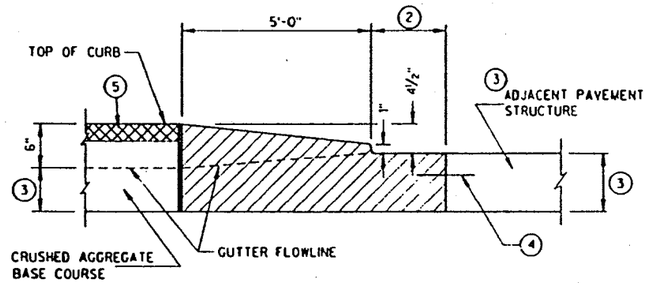

SECTION C-C

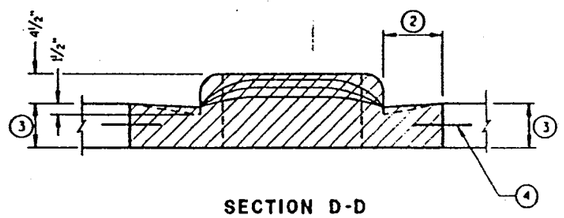

SECTION D-D

CONCRETE MEDIAN SLOPED NOSE DETAIL

CONCRETE MEDIAN NOSE

STATE OF WISCONSIN
DEPARTMENT OF TRANSPORTATION

APPROVED 07/30/96 DATE — CHIEF ROADWAY DEVELOPMENT ENGINEER

FHWA

S.D.D. 11 B 2-1

GENERAL NOTES

DETAILS OF CONSTRUCTION, MATERIALS AND WORKMANSHIP NOT SHOWN ON THIS DRAWING SHALL CONFORM TO THE PERTINENT REQUIREMENTS OF THE STANDARD SPECIFICATIONS, AND THE APPLICABLE SPECIAL PROVISIONS.

(1) W6 X 9 OR W6 X 8.5 STEEL POSTS AND NOTCHED PLASTIC BLOCKOUTS ARE ACCEPTABLE ALTERNATIVES FOR 6" X 8" WOOD POSTS WITH WOOD OR PLASTIC BLOCKOUTS. USE APPROVED NOTCHED PLASTIC BLOCKOUTS WITH STEEL POSTS.

DO NOT MIX STEEL POSTS AND WOOD POSTS IN A SINGLE INSTALLATION.

(2) USE STRUCTURAL STEEL POSTS CONFORMING TO AASHTO M183. GALVANIZE ACCORDING TO AASHTO M 111. EITHER SET THE POSTS IN DRILLED HOLES OR DRIVE TO GRADE. REMOVE MUSHROOMING CAUSED BY DRIVING AND REPAIR DAMAGED SPELTER COATING ON GALVANIZED POSTS.

(3) INSTALL STEEL POSTS WITH HOLES ON APPROACHING TRAFFIC SIDE.

(4) USE EITHER WOOD OR APPROVED PLASTIC BLOCKOUTS ON WOOD POSTS.

(5) WHEN SPECIFIED IN THE PLANS, THE 2-FOOT MINIMUM TO HINGE POINT MAY BE REDUCED OR ELIMINATED IF EXISTING CONDITIONS DO NOT PERMIT THE DESIRABLE EARTHWORK.

INCREASE POST LENGTH TO PROVIDE A MINIMUM EMBEDMENT OF 3'-6" IF THE SHOULDER HINGE POINT IS LOCATED IN FRONT OF THE POST.

(6) IF ROCK IS ENCOUNTERED DURING EXCAVATION, THE ENGINEER MAY APPROVE USING A 12 INCH DIAMETER POST HOLE EXTENDING 20 INCHES DEEP INTO THE ROCK. PLACE GRANULAR MATERIAL IN THE BOTTOM OF THE HOLE APPROXIMATELY 2½ INCHES DEEP. CUT THE POSTS TO LENGTH AND PLACE IN THE HOLE. BACKFILL WITH MATERIAL EXCAVATED FROM THE HOLE AND COMPACT ADEQUATELY.

INSTALL BEAM GUARD SECTIONS AND ALL NECESSARY HARDWARE ACCORDING TO THE APPLICABLE PLAN AND CURRENT STANDARD AND SUPPLEMENTAL SPECIFICATIONS.

ALL DIMENSIONS ARE SUBJECT TO MANUFACTURER'S TOLERANCES EXCEPT WHERE ALLOWABLE TOLERANCES ARE SHOWN.

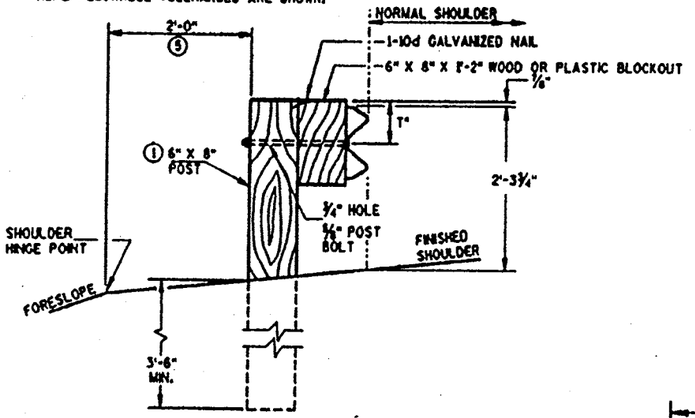

END VIEW
LOCATED ALONG A ROADWAY SHOULDER

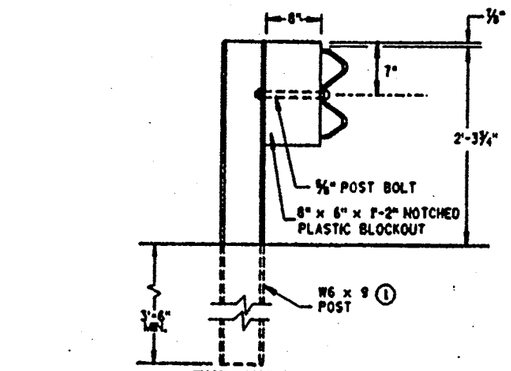

END VIEW
STEEL POST & NOTCHED
PLASTIC BLOCKOUT ALTERNATIVE

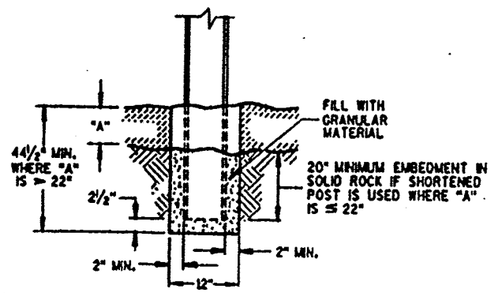

END VIEW
SETTING STEEL OR WOOD POST IN ROCK (6)

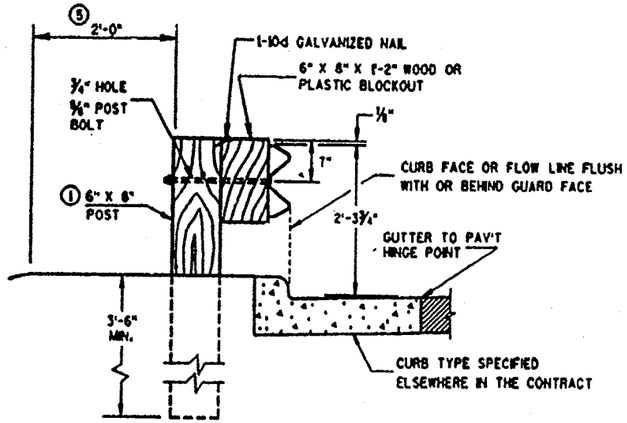

END VIEW
LOCATED ALONG A CURBED ROADWAY

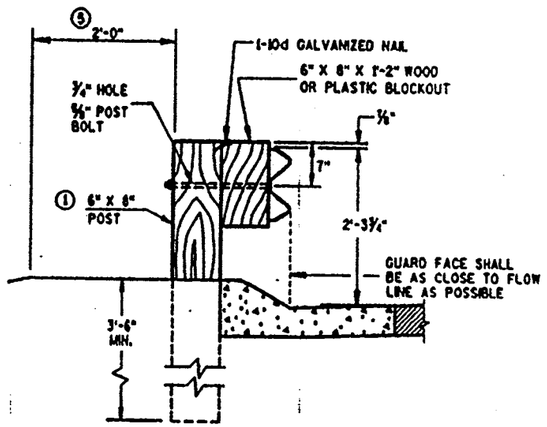

END VIEW
LOCATED ALONG A
MOUNTABLE CURBED ROADWAY

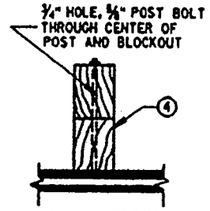

PLAN VIEW
WOOD POST,
BLOCKOUT & BEAM

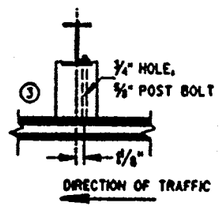

PLAN VIEW
STEEL POST, NOTCHED
PLASTIC BLOCKOUT & BEAM

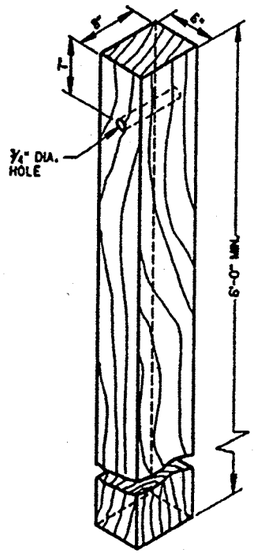

WOOD POST
(6"X8") NOMINAL

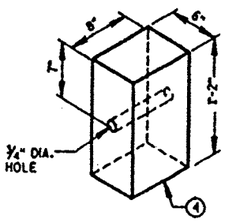

WOOD OR PLASTIC
BLOCKOUT FOR WOOD POSTS

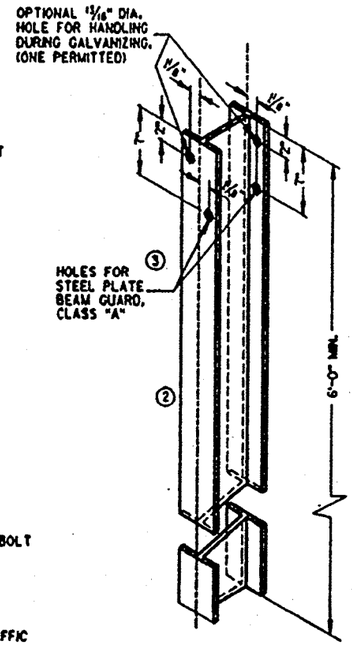

STEEL POST &
HOLE PUNCHING DETAIL
(W6 X 9) (1)

ALL HOLES 13/16" DIAMETER EXCEPT AS NOTED

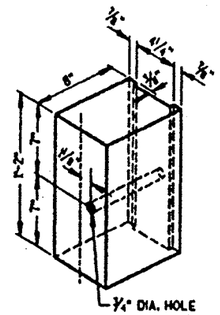

NOTCHED PLASTIC BLOCKOUT
FOR STEEL POSTS

STEEL PLATE BEAM GUARD,
CLASS 'A'
INSTALLATION & ELEMENTS

STATE OF WISCONSIN
DEPARTMENT OF TRANSPORTATION

S.D.D. 14 B 15-4a

TYPICAL INSTALLATION OF STEEL PLATE BEAM GUARD

S.D.D. 14 B 15-4a

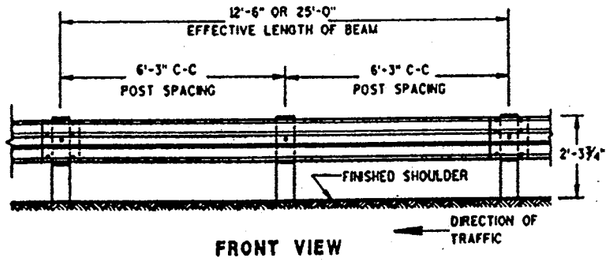

FRONT VIEW

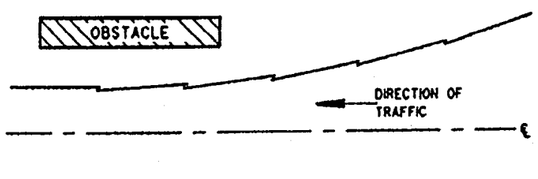

PLAN VIEW
BEAM LAPPING DETAIL

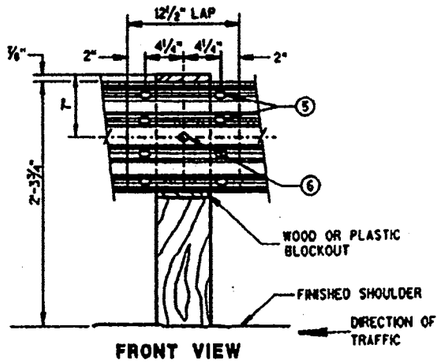

FRONT VIEW
BEAM SPLICE AT WOOD POST
AND POST MOUNTING DETAIL

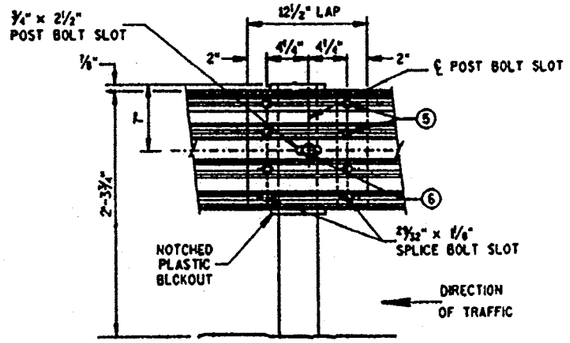

FRONT VIEW
BEAM SPLICE AT STEEL POST

TYPICAL SPLICING DETAILS OF STEEL PLATE BEAM GUARD

GENERAL NOTES

1. PROVIDE TYPE "H" SILVER REFLECTIVE SHEETING ON ALL REFLECTORS EXCEPT THOSE LOCATED ALONG THE LEFT EDGE OF ONE-WAY ROADWAYS, WHICH SHALL BE PROVIDED WITH TYPE "H" YELLOW REFLECTIVE SHEETING.
2. DO NOT INSTALL REFLECTORS ON THE FIRST 50 FEET OF THE APPROACH END OF THE ENERGY ABSORBING TERMINAL.
3. REVERSE EVERY OTHER REFLECTOR FOR 2-WAY VISIBILITY. THE CONTRACTOR MAY FURNISH TWO-SIDED REFLECTORS IN LIEU OF ONE-SIDED REFLECTORS.
4. PROVIDE AN ANGLE OF BEND OF 90° ± 1° FOR TWO-SIDED REFLECTORS.
5. 8 - ⅞" ϕ X 1¼" BUTTON HEAD BOLTS WITH OVAL SHOULDERS & RECESS NUTS.
6. ⅝" ϕ X 1'-6" BUTTON HEAD BOLT AND AND RECESS NUT WITH ROUND WASHER UNDER NUT.

REFLECTOR SPACING ②

	BEAM GUARD LENGTH	REFLECTOR SPACING	NO. SURFACES REFLECTORIZED	MIN. NO. REFLECTORS
ONE WAY TRAFFIC	< 200'	50' C-C	1	3
	> 200'	100' C-C	1	
TWO WAY TRAFFIC	< 200'	25' C-C	1 ③	6
	> 200'	50' C-C	1	
TWO WAY TRAFFIC	< 200'	50' C-C	2 ④	3
	> 200'	100' C-C	2	

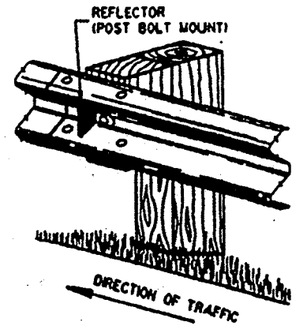

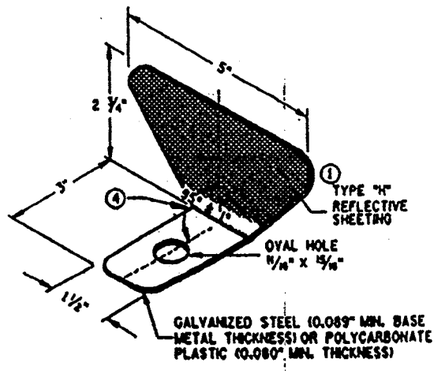

ONE SIDED REFLECTOR DETAIL AND TYPICAL INSTALLATION ①

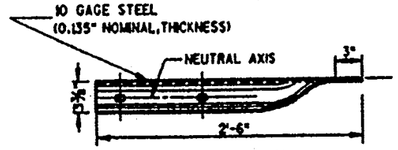

PLAN VIEW

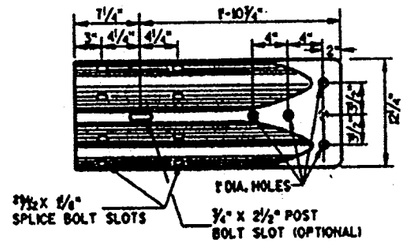

FRONT VIEW

W BEAM TERMINAL CONNECTOR
(USE ONLY ON THE TRAFFIC EXIT END OF ONE WAY BRIDGES)

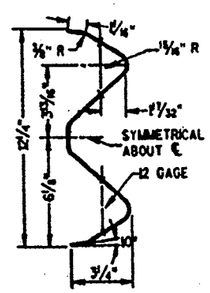

SECTION THRU W BEAM

STEEL PLATE BEAM GUARD,
CLASS 'A',
INSTALLATION & ELEMENTS

STATE OF WISCONSIN
DEPARTMENT OF TRANSPORTATION

APPROVED 12/08/00 (DATE) — CHIEF ROADWAY DEVELOPMENT ENGINEER

FHWA

S.D.D. 14 B 15-4b

S.D.D. 14 B 15-4b

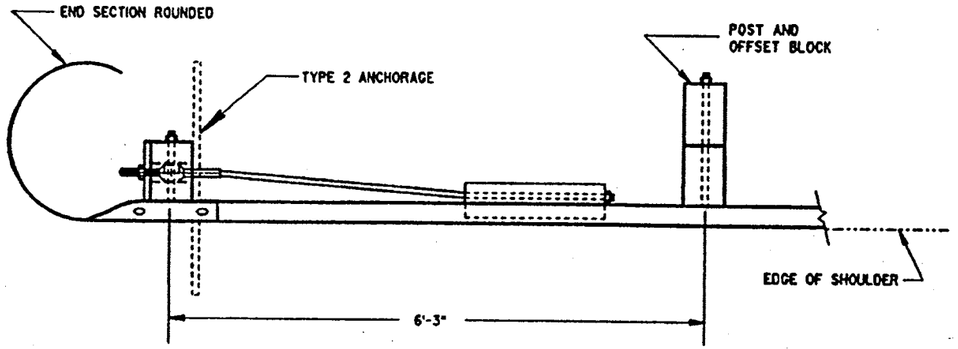

PLAN VIEW

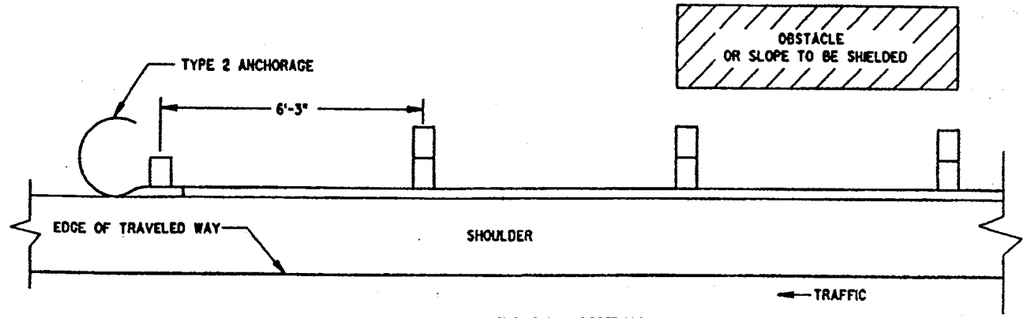

PLAN VIEW

BEAM GUARD WITH TYPE 2 ANCHORAGE
EXIT END - ONE WAY TRAFFIC

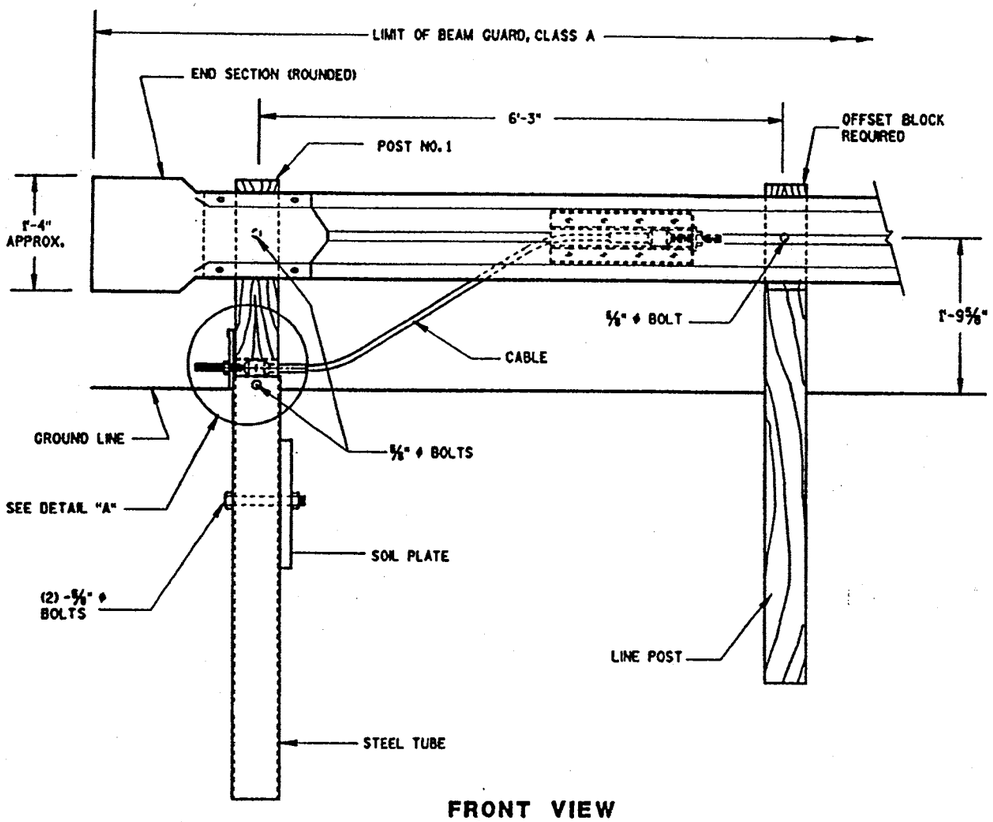

FRONT VIEW

END TREATMENT WITH TYPE 2 ANCHORAGE
(USE ON ONE-WAY ROADWAYS ONLY - DEPARTING END)

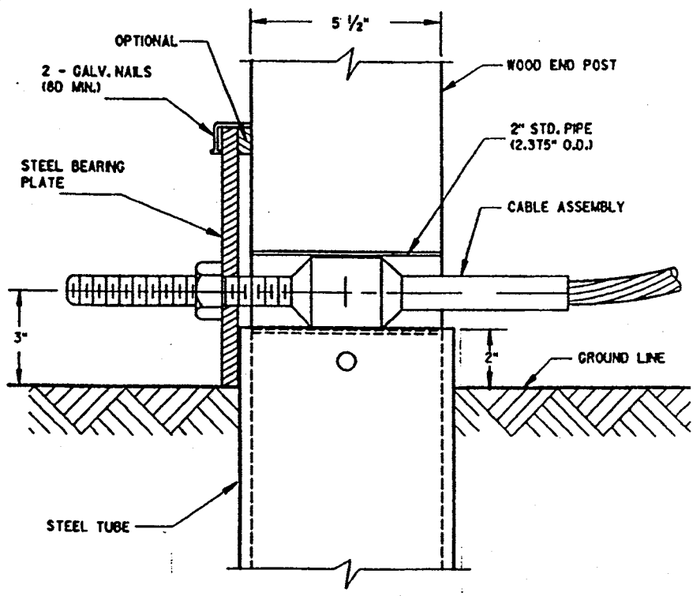

DETAIL "A"
POST NO. 1

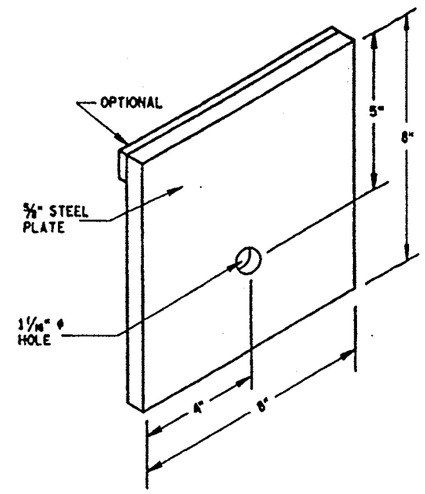

STEEL BEARING PLATE

CLASS 'A' STEEL PLATE BEAM GUARD
END TREATMENT WITH ANCHORAGE,
TYPE 2

STATE OF WISCONSIN
DEPARTMENT OF TRANSPORTATION

S.D.D. 14 B 16-3a

S.D.D. 14 B 16-3a

BILL OF MATERIALS

NOTE NO.	QTY.	DESCRIPTION
①	4	WOOD BREAKAWAY TERMINAL POST: 5½" X 7½" X 3'-9"
②	4	STEEL TUBE: TS 8" X 6" X 0.188", 4'-6" LONG
③	4	SOIL PLATE: 2'-0" X 1'-6" X ¼"
④	4	WOOD BREAKAWAY CRT POST: 6" X 8" X 6'-0"
⑤	6	WOOD OFFSET BLOCKS: 6"X 8" X 1'-2"
⑥	1	PIPE SLEEVE: 2" X 5 ½" STANDARD PIPE
⑦	1	BEARING PLATE
⑧	1	BCT CABLE ASSEMBLY
⑨	1	CABLE ANCHOR BOX
⑩	1	STRUT & YOKE
⑪	1	STEEL PLATE BEAM, END PANEL 12 GA. 13'-6½" LONG FOR SKT-350, ET-2000 AND ET-2000 PLUS
⑫	3	STEEL PLATE BEAM: 12 GA. 13'-6½"
⑬	1	ET-2000/ET-2000 PLUS GUARDRAIL EXTRUDER OR SKT-350 IMPACT HEAD: AS FURNISHED BY MANUFACTURER
⑭	1	REFLECTIVE SHEETING: 18" X 18"

GENERAL NOTES

Ⓐ USE 3:1 OR FLATTER SLOPE FOR INSTALLATION ON EXISTING HIGHWAYS.

Ⓑ DO NOT ATTACH GUARDRAIL TO POST BLOCKS AT POSTS NO. 3, 5 & 7.

Ⓒ AFTER FINAL ASSEMBLY, RECHECK CABLE TO BE SURE IT IS TAUT AND HAS NOT RELAXED.

STEEL POSTS SHALL NOT BE ALLOWED FOR USE WITH ENERGY ABSORBING TERMINALS.

DO NOT INSTALL REFLECTORS ON THE FIRST 50 FEET OF THE APPROACH END OF THE ENERGY ABSORBING TERMINAL.

* DO NOT ATTACH BLOCKOUTS TO POSTS 1 AND 2.

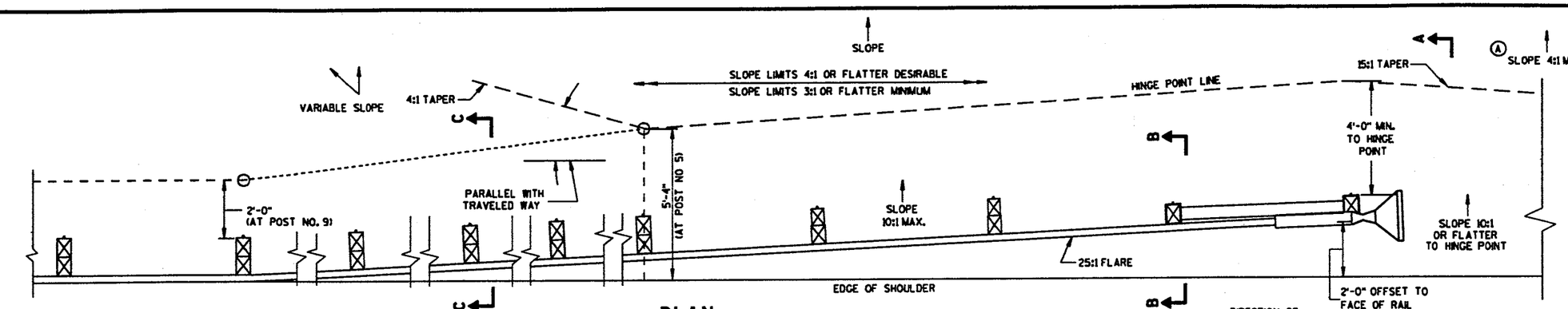

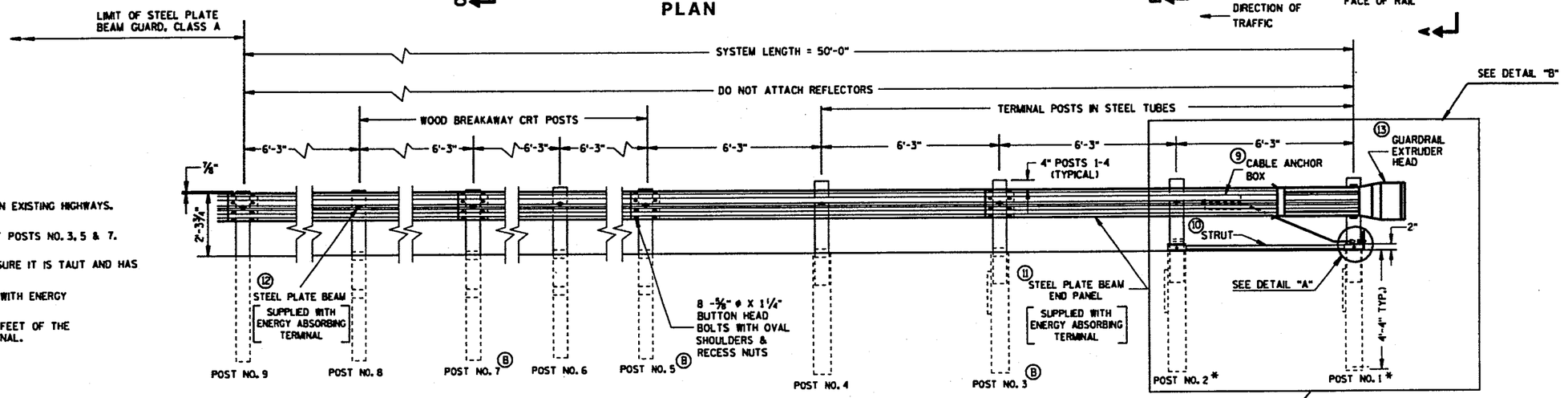

ELEVATION

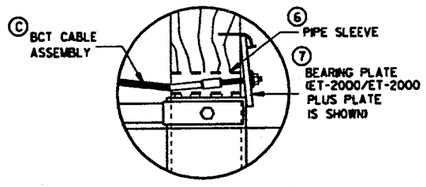

DETAIL "A"

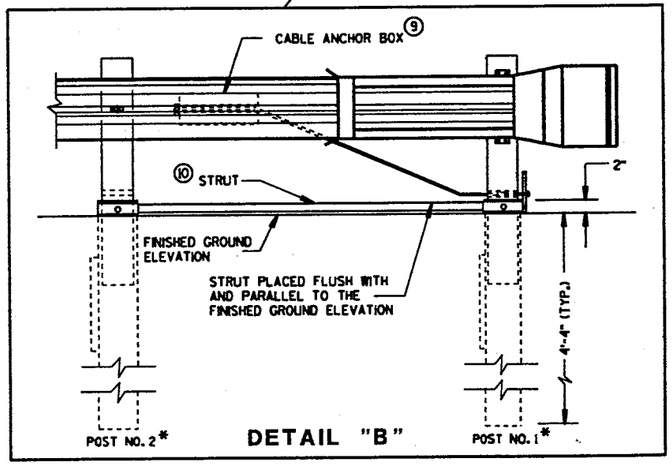

DETAIL "B"

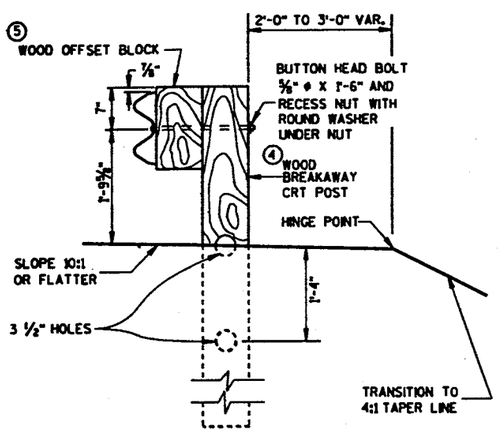

SECTION C-C
TYPICAL AT POST NOS. 4, 6, 8

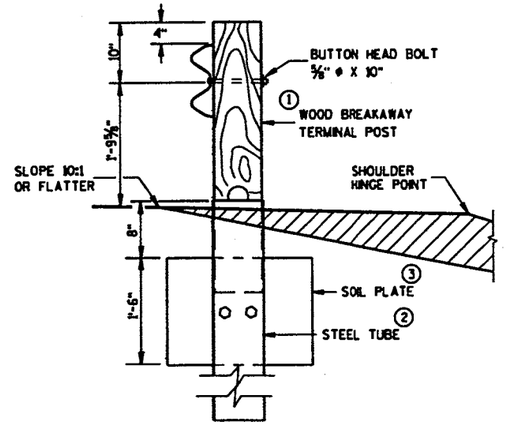

SECTION B-B
TYPICAL AT POST NO. 2*

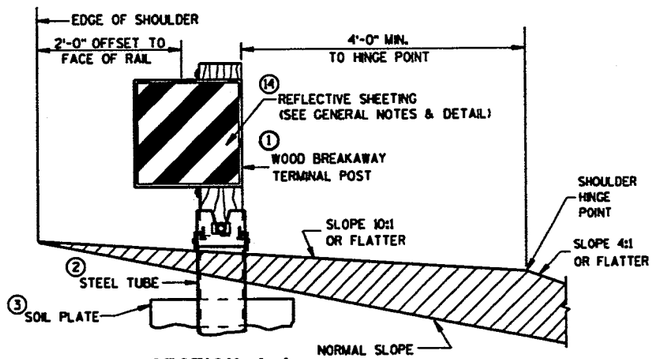

SECTION A-A
TYPICAL AT POST NO. 1*

STEEL PLATE BEAM GUARD
ENERGY ABSORBING TERMINAL

STATE OF WISCONSIN
DEPARTMENT OF TRANSPORTATION

6

S.D.D. 14 B 24-4a

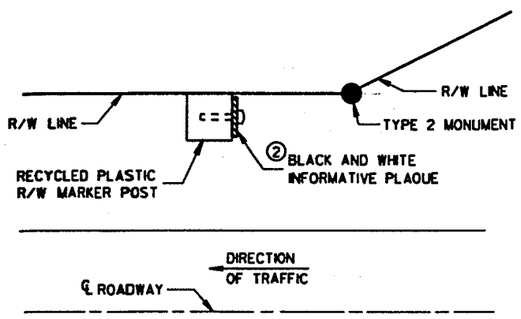

PLAN VIEW

TYPICAL LOCATION ②

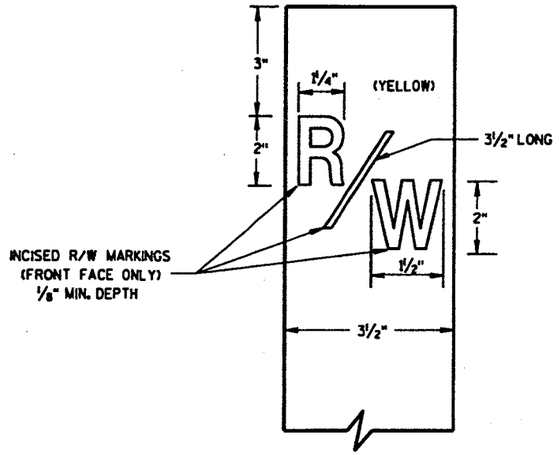

RECYCLED PLASTIC RIGHT-OF-WAY MARKER POST FRONT FACE

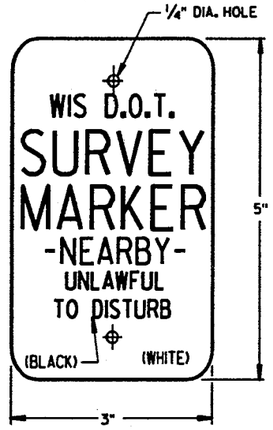

INFORMATIVE PLAQUE ③

GENERAL NOTES

DETAILS OF CONSTRUCTION, MATERIALS, AND WORKMANSHIP NOT SHOWN ON THIS DRAWING SHALL CONFORM TO THE PERTINENT REQUIREMENTS OF THE STANDARD SPECIFICATIONS AND THE APPLICABLE SPECIAL PROVISIONS.

① POSTS SHALL BE ANCHORED AND SET INTO EXCAVATED HOLES AS ILLUSTRATED OR MAY BE DRIVEN AND ANCHORED INTO THE GROUND BY ALTERNATE DEVICES APPROVED BY THE ENGINEER.

② A MARKER POST FOR RIGHT-OF-WAY SHALL BE PLACED ADJACENT TO EACH TYPE 2 MONUMENT TO SERVE AS A GUARD POST, AND AT OTHER LOCATIONS AS SHOWN ON THE PLANS OR AS DIRECTED BY THE ENGINEER.

③ INFORMATIVE PLAQUES WILL BE FURNISHED BY THE DEPARTMENT OF TRANSPORTATION AND BE PLACED ON THE SIDE OF THE POST FACING THE TYPE 2 MONUMENT.

④ IN AREAS OF SOLID ROCK, DRILL A 1½" MIN. BORE HOLE INTO THE ROCK TO A DEPTH OF 12". CUT THE POST SO THAT A LENGTH OF 3'-6" PROTRUDES ABOVE THE GROUND. DRILL A ⅝" PILOT HOLE 1 FOOT INTO THE BOTTOM OF THE POST. DRIVE A 2 FOOT PIECE OF NO. 6 REINFORCING BAR INTO THE POST. BLOW OUT THE BORE HOLE IN THE ROCK USING COMPRESSED AIR. FILL THE BORE HOLE WITH EPOXY, CONCRETE CEMENT OR EQUIVALENT. PLACE THE POST WITH THE EXTENDED REINFORCING BAR INTO THE BORE HOLE WITH ADHESIVE. DEPENDING ON THE STABILITY OF THE ROCK, DEPTH OF THE BORE HOLE AND REINFORCING BAR MAY BE INCREASED AT THE DIRECTION OF THE ENGINEER.

MARKING & SIGNING DETAILS

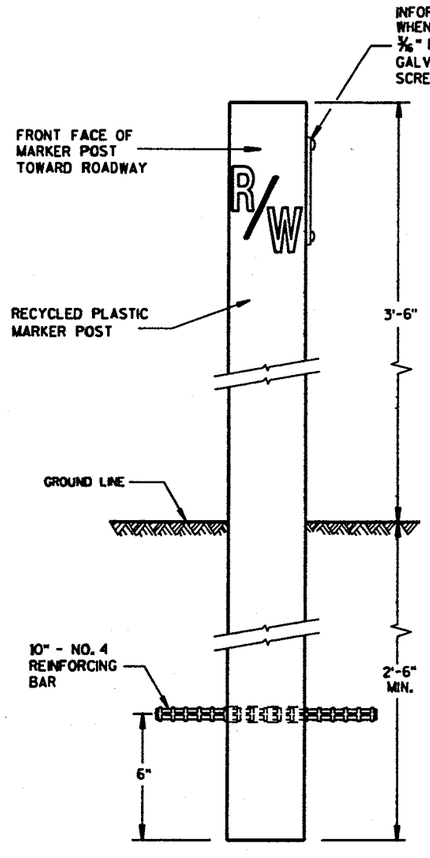

FRONT VIEW

TYPICAL INSTALLATION ①

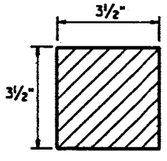

SECTION A-A

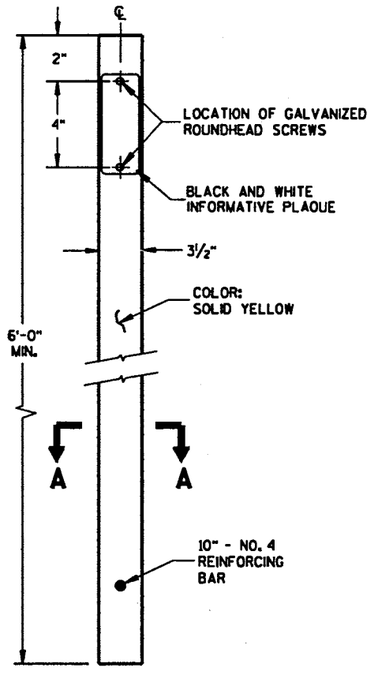

SIDE VIEW

STANDARD RECYCLED PLASTIC MARKER POST

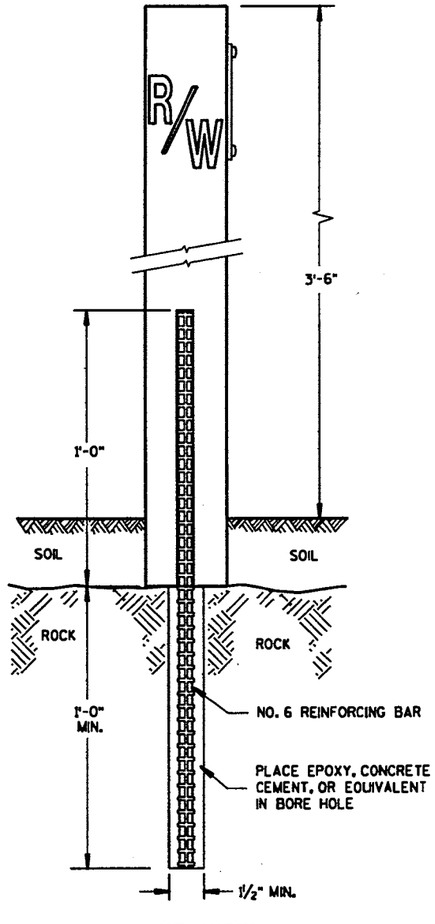

FRONT VIEW

ROCK INSTALLATION ④

MARKER POST FOR RIGHT-OF-WAY

STATE OF WISCONSIN
DEPARTMENT OF TRANSPORTATION

APPROVED

DATE — CHIEF SURVEYING AND MAPPING ENGINEER

FHWA

6

S.D.D. 15 A 1-9

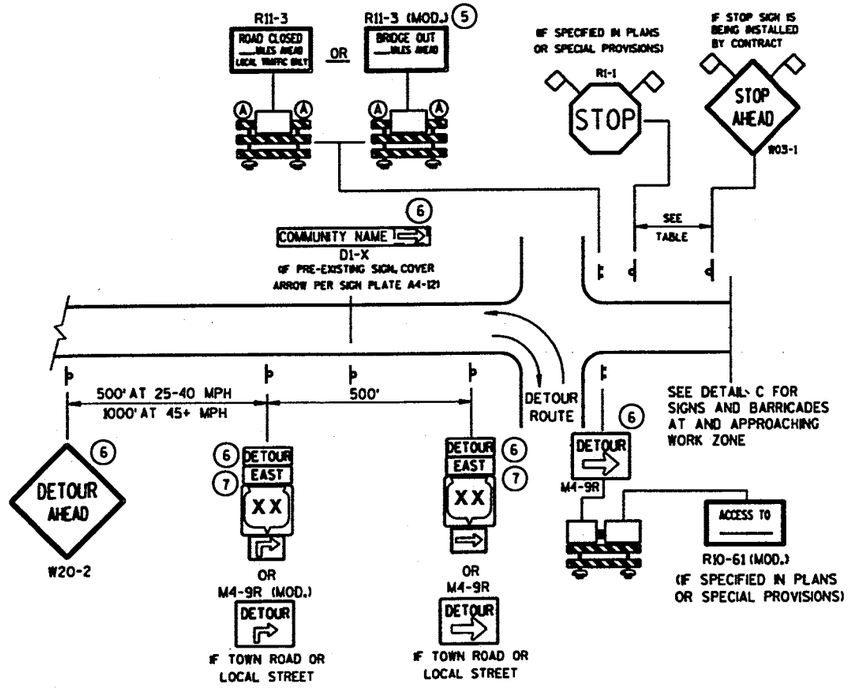

DETAIL A

MAINLINE CLOSURE WITH POSTED DETOUR

WORK ZONE GREATER THAN ½ MILE FROM DETOUR ROUTE (1000 FEET IF URBAN)

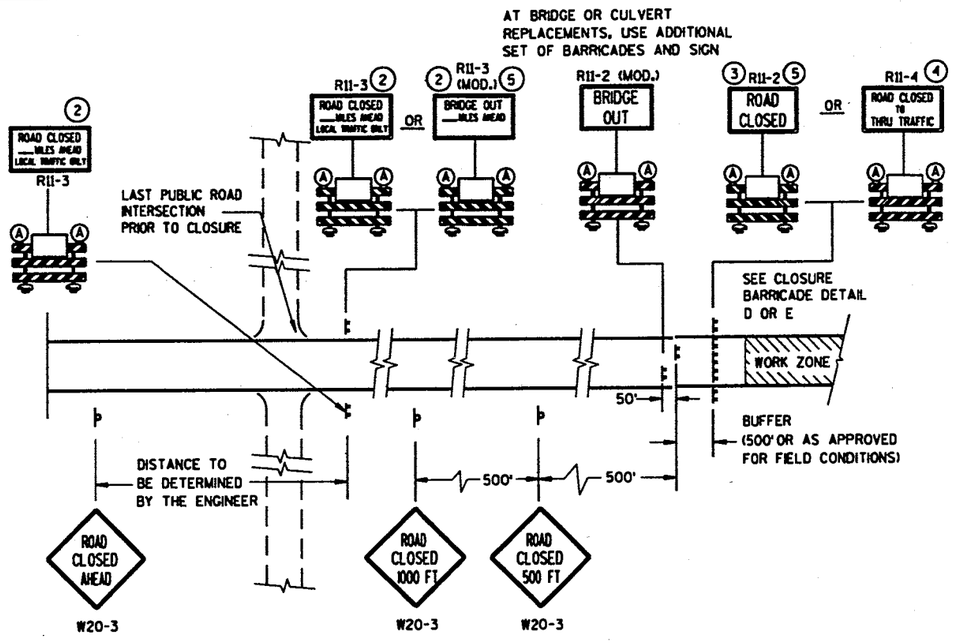

SPEED LIMIT (MPH)	"STOP AHEAD" ADVANCE WARNING DISTANCE (FT)
25	200
30	200
35	350
40	350
45	500
50	550
55	750

SEE SDD 15C2-4b
FOR GENERAL NOTES
AND FOOTNOTES ① THROUGH ⑦

DETAIL C

MAINLINE CLOSURE, NO POSTED DETOUR

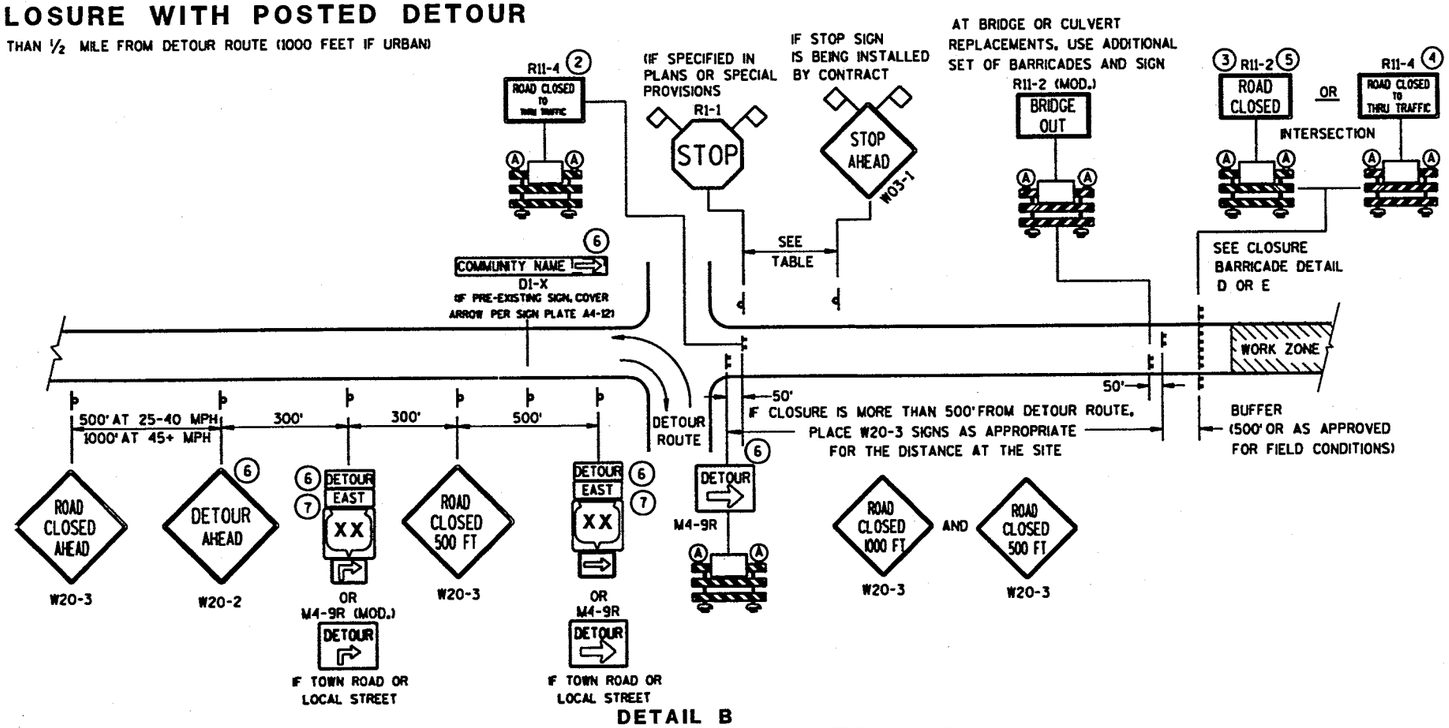

DETAIL B

MAINLINE CLOSURE WITH POSTED DETOUR

WORK ZONE LESS THAN ½ MILE FROM DETOUR ROUTE (1000 FEET IF URBAN)

LEGEND

- POST MOUNTED SIGN
- TYPE III BARRICADES
- (A) TYPE "A" LOW INTENSITY FLASHING WARNING LIGHT (FOR NIGHT USE)
- WORK ZONE
- DETOUR / EAST — M4-8 / M3-X
- XX — M1-4; COUNTY XX — M1-5A; XX — M1-6
- M05-1 OR M06-1
- FLAGS, 15" X 15" MIN., (ORANGE)

BARRICADES AND SIGNS FOR MAINLINE CLOSURES

STATE OF WISCONSIN
DEPARTMENT OF TRANSPORTATION

6

S.D.D. 15 C 2-4a

S.D.D. 15 C 2-4a

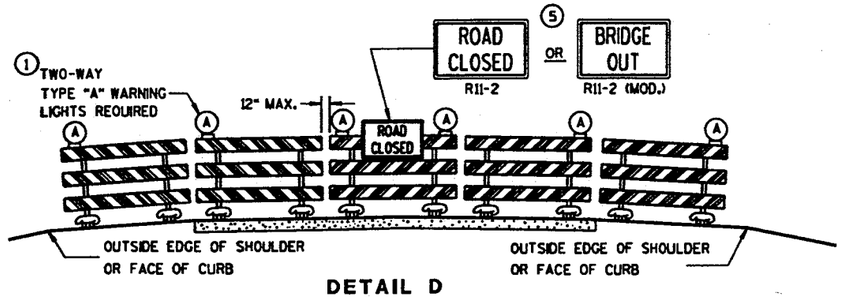

DETAIL D

ROAD CLOSURE BARRICADE DETAIL

APPROACH VIEW

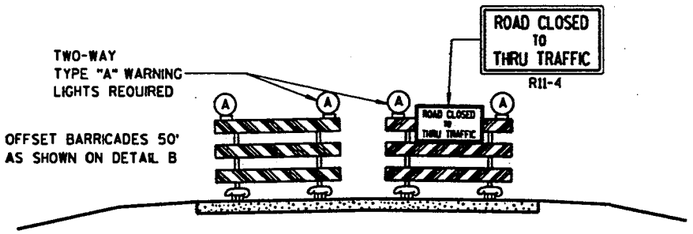

DETAIL E

LANE CLOSURE BARRICADE DETAIL

APPROACH VIEW

SEE SDD 15C2-4a FOR LEGEND

GENERAL NOTES

THE EXACT NUMBER, LOCATION, AND SPACING OF ALL SIGNS AND BARRICADES SHALL BE ADJUSTED TO FIT FIELD CONDITIONS AS APPROVED BY THE ENGINEER.

ANY SIGNS TEMPORARY OR EXISTING, WHICH CONFLICT WITH TRAFFIC CONTROL "IN USE" SHALL BE REMOVED OR COVERED AS NEEDED AND AS APPROVED BY THE ENGINEER.

THE SPACING BETWEEN TRAFFIC CONTROL SIGNS SHOULD BE ADJUSTED TO NOT CONFLICT WITH AND SHOULD PROVIDE A DESIRABLE MINIMUM OF 200 FEET CLEARANCE TO EXISTING SIGNS THAT WILL REMAIN IN PLACE.

BARRICADES THAT MUST BE MOVED FOR A WORK OPERATION SHALL BE IMMEDIATELY RE-ESTABLISHED UPON COMPLETION OF THE OPERATION OR, FOR CONTINUING OPERATIONS, AT THE END OF EACH WORKING DAY.

SIGNS THAT WILL BE IN PLACE LESS THAN 7 CONTINUOUS DAYS AND NIGHTS MAY BE MOUNTED ON PORTABLE SUPPORTS.

ALL TYPE III BARRICADES SHALL HAVE RAILS REFLECTORIZED ON BOTH FACES. STRIPES SHALL BE PROPERLY SLOPED DOWN TOWARD THE TRAFFIC SIDE OR AS SHOWN IN THE ROAD CLOSURE BARRICADE DETAIL D FOR FULL ROAD CLOSURES.

TYPE "A" LOW-INTENSITY FLASHING WARNING LIGHTS SHALL BE VISIBLE ON BOTH SIDES OF THE BARRICADE.

THE R11-2, R11-3, M4-9, R11-4 AND R10-61 SIGNS PLACED ON BARRICADES SHALL COVER NO MORE THAN THE TOP RAIL. THE SIGNS SHALL NOT COVER ANY PORTION OF THE MIDDLE OR BOTTOM RAILS.

THE REFLECTIVE SHEETING USED ON R11-2, R11-3, R11-4, R10-61 AND R1-1 SIGNS SHALL COMPLY WITH SUBSECTION 637.2.2.2 OF THE STANDARD SPECIFICATIONS.

"WO AND "MO" SIGNS ARE THE SAME AS "W" AND "M" SIGNS EXCEPT THE BACKGROUND IS ORANGE.

ALL SIGNS SHALL BE 48" X 48" UNLESS OTHERWISE NOTED BELOW:

- R11-2 SHALL BE 48" X 30".
- R11-3, R11-4 AND R10-61 SHALL BE 60" X 30".
- M4-9 SHALL BE 30" X 24".
- M3-X AND M4-8 SHALL BE 24" X 12". (30" X 15" IF NEEDED TO MATCH EXISTING SIGNS.)
- M1-4, M1-5A, AND M1-6 SHALL BE 24" X 24". (36" X 36" IF NEEDED TO MATCH EXISTING SIGNS.)
- M05-1 AND M06-1 SHALL BE 21" X 21". (30" X 30" IF NEEDED TO MATCH EXISTING SIGNS.)
- D1-X SHALL BE AS SHOWN ON SPECIFIC PROJECT SIGNING DETAIL SHEETS.
- R1-1 SHALL BE 36" X 36".

(1) TWO WARNING LIGHTS SHALL BE PROVIDED ON THE CENTER BARRICADE AND A MINIMUM OF ONE WARNING LIGHT SHALL BE PROVIDED ON EACH OF THE OTHER BARRICADES WITHIN THE ROADWAY LIMITS. SPACING OF THE WARNING LIGHTS SHALL BE UNIFORM TO THE EDGE OF ROADWAY AS SHOWN (APPROX. 8-FOOT LIGHT SPACING).

(2) THESE SIGNS AND BARRICADES ARE NOT REQUIRED IF ROAD CLOSURE BEGINS AT INTERSECTION.

(3) FOR ROAD CLOSURE WITHOUT LOCAL ACCESS TO PROJECT, SEE ROAD CLOSURE BARRICADE DETAIL D.

(4) FOR ROAD CLOSURE WITH LOCAL ACCESS TO PROJECT, SEE LANE CLOSURE BARRICADE DETAIL E.

(5) FOR BRIDGE OR CULVERT REPLACEMENTS, SUBSTITUTE "BRIDGE OUT" INSTEAD OF "ROAD CLOSED" ON R11-2 AND R11-3 SIGNS.

(6) INSTALL DETOUR AND COMMUNITY GUIDE SIGNS AND ARROWS ONLY IF SPECIFIED IN THE CONTRACT. IF THERE ARE EXISTING ROUTE MARKER ASSEMBLIES THAT WILL REMAIN IN PLACE, ADJUST THE LOCATION OF THE DETOUR ROUTE SIGNS TO CORRESPOND WITH THE EXISTING ASSEMBLIES. MODIFY EXISTING SIGNS WHERE POSSIBLE. SEE SPECIFIC PROJECT DETOUR SIGNING DETAIL SHEETS. IF DETOUR SIGNS ARE BEING INSTALLED BY OTHERS, PLACE THE CONTRACTED TRAFFIC CONTROL SIGNS TO ALLOW FOR PLACEMENT OF ALL WARNING, DETOUR AND GUIDE SIGNS AS SHOWN.

(7) "EAST" CARDINAL DIRECTION MARKERS AND RIGHT TURN ARROWS ARE SHOWN. USE OTHER CARDINAL DIRECTIONS AND ARROWS AS APPROPRIATE.

BARRICADES AND SIGNS FOR MAINLINE CLOSURES

STATE OF WISCONSIN
DEPARTMENT OF TRANSPORTATION

APPROVED

DATE _____ CHIEF SIGNS AND MARKING ENGINEER

FHWA

6

S.D.D. 15 C 2-4b

THIS DRAWING PROVIDES GENERAL GUIDANCE ON TYPICAL DETOUR SIGN LAYOUT AND SPACING. SEE PROJECT DETOUR SIGNING SHEETS FOR SPECIFIC DETAILS FOR EACH PROJECT.

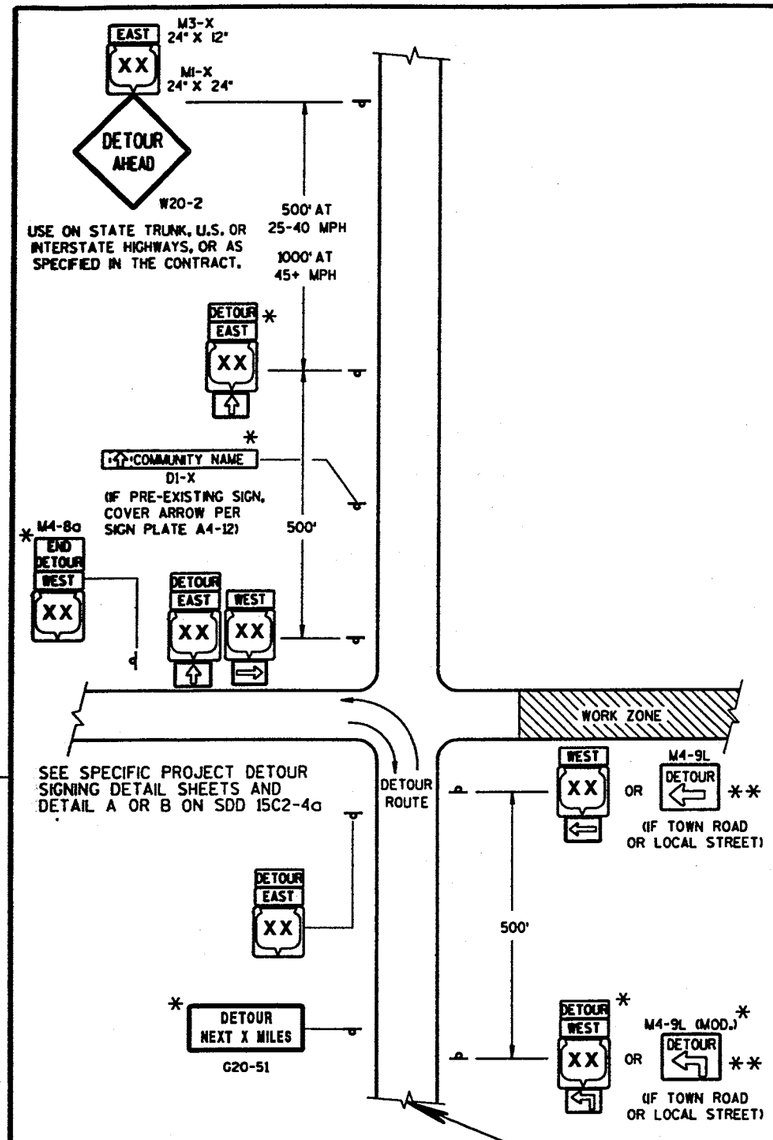

MATCH POINT

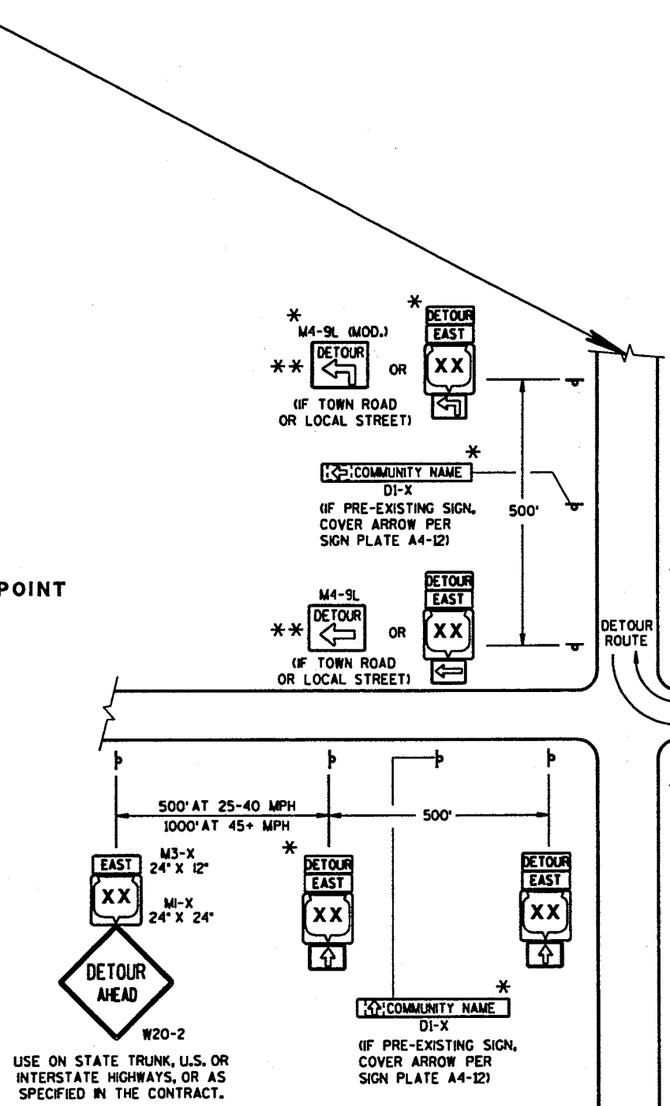

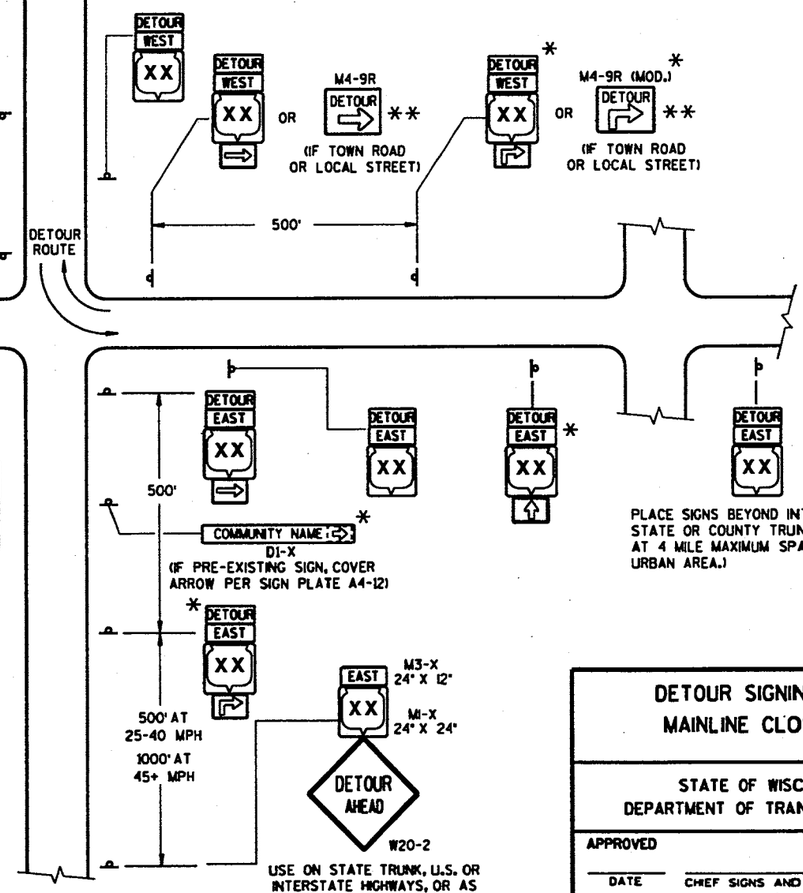

GENERAL NOTES

THE EXACT NUMBER, LOCATION AND SPACING OF ALL SIGNS SHALL BE ADJUSTED TO FIT FIELD CONDITIONS AS APPROVED BY THE ENGINEER.

IF THERE ARE EXISTING ROUTE MARKER ASSEMBLIES THAT WILL REMAIN IN PLACE, ADJUST THE LOCATION OF THE DETOUR ROUTE SIGNS TO CORRESPOND WITH THE EXISTING ASSEMBLIES. SEE SPECIFIC PROJECT DETOUR SIGNING DETAIL SHEETS. MODIFY EXISTING SIGNS WHERE POSSIBLE.

THE SPACING BETWEEN TRAFFIC CONTROL AND DETOUR SIGNS SHOULD BE ADJUSTED TO NOT CONFLICT WITH AND TO PROVIDE A DESIRABLE MINIMUM OF 200 FEET CLEARANCE TO EXISTING SIGNS THAT WILL REMAIN IN PLACE.

ANY SIGNS TEMPORARY OR EXISTING, WHICH CONFLICT WITH TRAFFIC CONTROL "IN USE", SHALL BE REMOVED OR COVERED AS NEEDED AND AS APPROVED BY THE ENGINEER.

SIGNS THAT WILL BE IN PLACE LESS THAN 7 CONTINUOUS DAYS AND NIGHTS MAY BE MOUNTED ON PORTABLE SUPPORTS.

"MO" SIGNS ARE THE SAME AS "M" SIGNS EXCEPT THE BACKGROUND IS ORANGE.

SIGN SIZES SHALL BE AS FOLLOWS:

M3-X AND M4-8 SHALL BE 24" X 12". (30" X 15" IF NEEDED TO MATCH EXISTING SIGNS.)
M1-4, M1-5A, AND M1-6 SHALL BE 24" X 24". (36" X 36" IF NEEDED TO MATCH EXISTING SIGNS.)
M05-1 AND M06-1 SHALL BE 21" X 21". (30" X 30" IF NEEDED TO MATCH EXISTING SIGNS.)
M4-9 SHALL BE 30" X 24".
M4-8a SHALL BE 24" X 18".
G20-51 SHALL BE 60" X 24".
W20-2 SHALL BE 48" X 48".
D1-X SHALL BE AS SHOWN ON SPECIFIC PROJECT SIGNING DETAIL SHEETS.

* OPTIONAL SIGNS. SEE SPECIFIC PROJECT DETOUR SIGNING DETAIL SHEETS.

** FOR A TOWN ROAD OR LOCAL STREET DETOURED ONTO A STATE TRUNK HIGHWAY, PLACE A ROAD NAME PLAQUE ABOVE THE M4-9 SIGN AS SPECIFIED IN THE CONTRACT.

LEGEND

- POST MOUNTED SIGN
- WORK ZONE
- DETOUR EAST — M4-8 / M3-X
- XX OR COUNTY XX OR XX — M1-4 / M1-5A / M1-6
- M05-1 OR M06-1 OR M06-1

DETAIL F

DETOUR SIGNING

DETOUR SIGNING FOR MAINLINE CLOSURES

STATE OF WISCONSIN
DEPARTMENT OF TRANSPORTATION

APPROVED

DATE — CHIEF SIGNS AND MARKING ENGINEER

FHWA

6

S.D.D. 15 C 2-4c

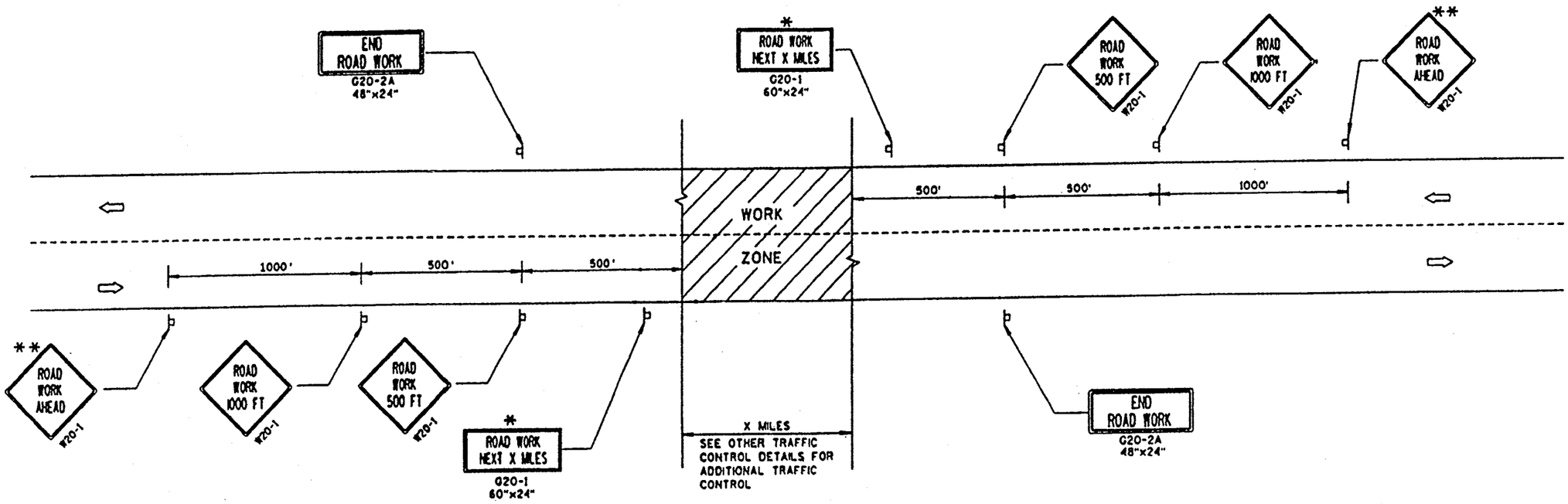

TYPICAL SIDEROAD APPROACH WARNING SIGN DETAIL

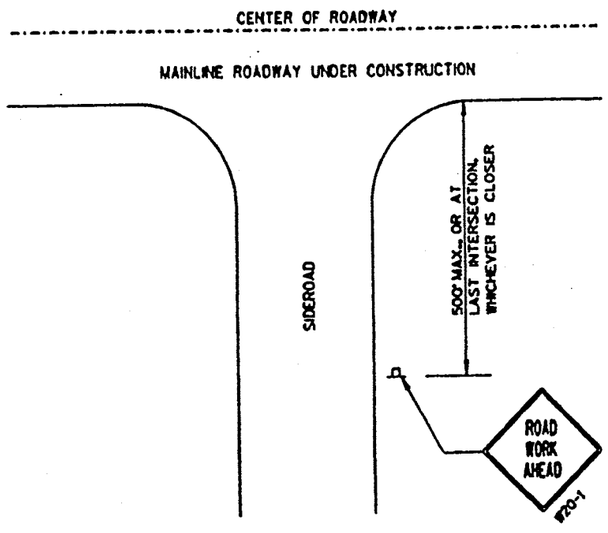

GENERAL NOTES

THE EXACT NUMBER, LOCATION, AND SPACING OF ALL SIGNS AND DEVICES SHALL BE ADJUSTED TO FIT FIELD CONDITIONS.

THE SPACING BETWEEN TRAFFIC CONTROL SIGNS SHOULD BE ADJUSTED TO NOT CONFLICT WITH AND SHOULD PROVIDE A MINIMUM OF 200 FEET (500 FEET DESIRABLE) CLEARANCE TO EXISTING SIGNS THAT WILL REMAIN IN PLACE.

ALL SIGNS ARE 48"x48" UNLESS OTHERWISE NOTED.

SIGNS THAT WILL BE IN PLACE LESS THAN 7 CONTINUOUS DAYS AND NIGHTS MAY BE MOUNTED ON PORTABLE SUPPORTS.

IF A "STOP" SIGN MUST BE REMOVED FOR A WORK OPERATION, A TEMPORARY "STOP" SIGN SHALL BE PLACED PRIOR TO THE SIGN REMOVAL, OR A FLAGGER SHALL BE PROVIDED UNTIL THE SIGN IS RE-ESTABLISHED.

* OMIT G20-1 SIGNS IF LENGTH OF WORK AREA IS 2 MILES OR LESS.

** PLACE ADDITIONAL W20-1 "ROAD WORK AHEAD" SIGN IF WORK AREA WITHIN THE PROJECT IS SEPARATED BY MORE THAN 2 MILES FROM PREVIOUS WORK AREA OR SIGNING.

LEGEND

POST MOUNTED SIGN

DIRECTION OF TRAFFIC FLOW

TRAFFIC CONTROL,
ADVANCE WARNING SIGNS
45 M.P.H. OR GREATER
TWO-WAY UNDIVIDED ROAD OPEN TO TRAFFIC

STATE OF WISCONSIN
DEPARTMENT OF TRANSPORTATION

APPROVED
5/21/00
DATE

CHIEF SIGNS AND MARKING ENGINEER

FHWA

S.D.D. 15 C 4-1

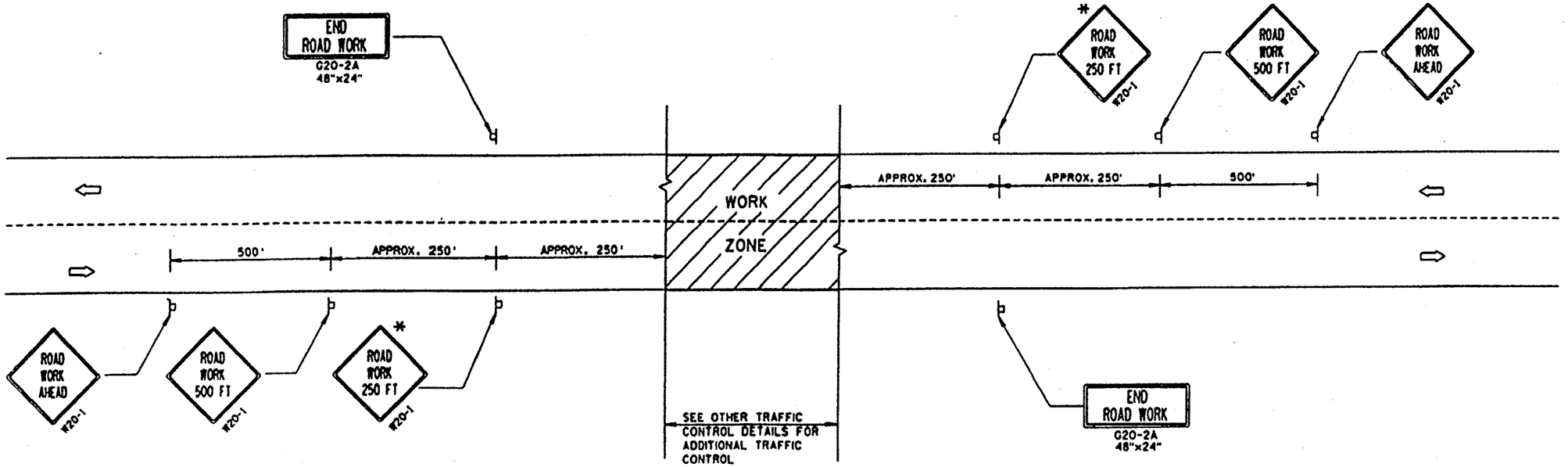

TYPICAL SIDEROAD APPROACH WARNING SIGN DETAIL

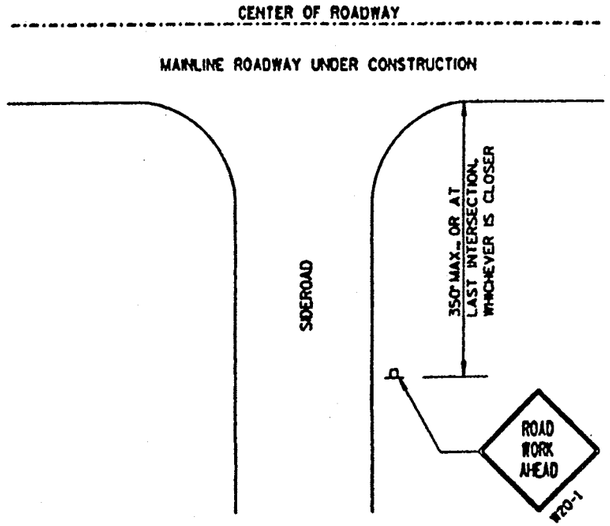

GENERAL NOTES

THE EXACT NUMBER, LOCATION, AND SPACING OF ALL SIGNS AND DEVICES SHALL BE ADJUSTED TO FIT FIELD CONDITIONS.

THE SPACING BETWEEN TRAFFIC CONTROL SIGNS SHOULD BE ADJUSTED TO NOT CONFLICT WITH AND SHOULD PROVIDE A DESIRABLE MINIMUM OF 200 FEET CLEARANCE TO EXISTING SIGNS THAT WILL REMAIN IN PLACE.

ALL SIGNS ARE 48"×48" UNLESS OTHERWISE NOTED. IF NECESSARY DUE TO SPACE CONSTRAINTS, 36"×36" SIGNS MAY BE USED INSTEAD OF 48"×48" SIGNS, IF APPROVED BY DISTRICT TRAFFIC UNIT.

SIGNS THAT WILL BE IN PLACE LESS THAN 7 CONTINUOUS DAYS AND NIGHTS MAY BE MOUNTED ON PORTABLE SUPPORTS.

IF A "STOP" SIGN MUST BE REMOVED FOR A WORK OPERATION, A TEMPORARY "STOP" SIGN SHALL BE PLACED PRIOR TO THE SIGN REMOVAL, OR A FLAGGER SHALL BE PROVIDED UNTIL THE SIGN IS RE-ESTABLISHED.

* THE THIRD W20-1 SIGN IS REQUIRED ONLY IF THERE IS AN INTERSECTION BETWEEN THE "ROAD WORK 500 FT" SIGN AND THE WORK ZONE. ADJUST THE PLACEMENT OF THIS SIGN BASED ON INTERSECTION LOCATION AND OTHER FIELD CONDITIONS.

LEGEND

þ POST MOUNTED SIGN

⇨ DIRECTION OF TRAFFIC FLOW

TRAFFIC CONTROL,
ADVANCE WARNING SIGNS
40 M.P.H. OR LESS
TWO-WAY UNDIVIDED ROAD OPEN TO TRAFFIC

STATE OF WISCONSIN
DEPARTMENT OF TRANSPORTATION

APPROVED
5/21/08
DATE
CHIEF SIGNS AND MARKING ENGINEER

FHWA

S.D.D. 15 C 5-1

S.D.D. 15 C 5-1

GENERAL NOTES

DETAILS OF INSTALLATION, MATERIALS AND WORKMANSHIP NOT SHOWN ON THIS DRAWING SHALL CONFORM TO THE PERTINENT REQUIREMENTS OF THE STANDARD SPECIFICATIONS AND APPLICABLE SPECIAL PROVISIONS.

ALL LETTERS AND SYMBOLS SHALL BE IN CONFORMANCE WITH REQUIREMENTS INCLUDED IN "STANDARD ALPHABETS FOR HIGHWAY SIGNS AND PAVEMENT MARKING" BY THE FEDERAL HIGHWAY ADMINISTRATION. ALL LETTERS, ARROWS AND SYMBOLS SHALL BE WHITE AND REFLECTORIZED.

A DETAILED DRAWING OF THE HANDICAPPED PARKING SYMBOL IS ILLUSTRATED IN THE "STANDARD HIGHWAY SIGNS MANUAL" BY THE FEDERAL HIGHWAY ADMINISTRATION.

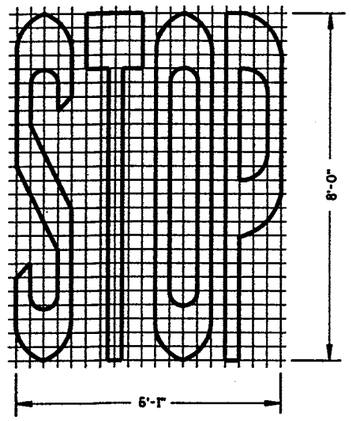

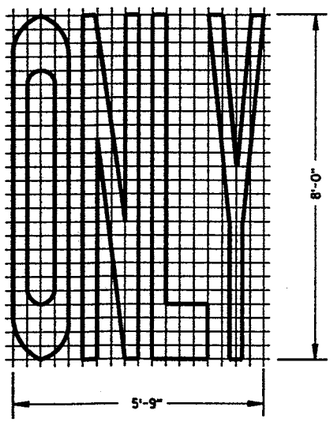

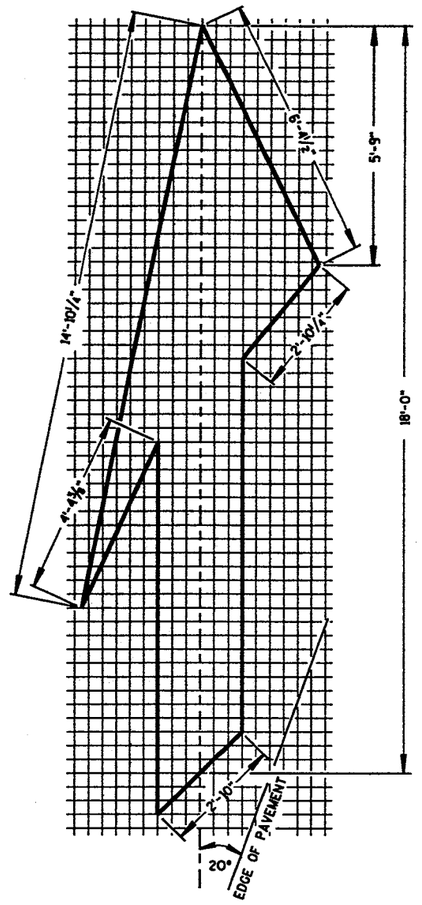

TYPE 5 LANE DROP ARROW

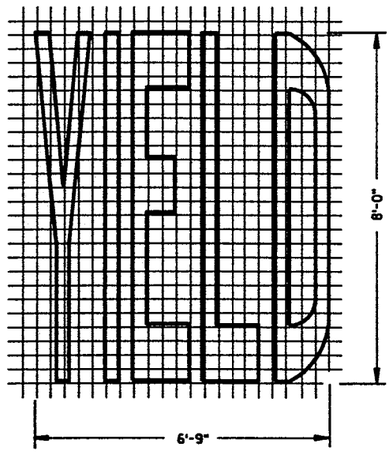

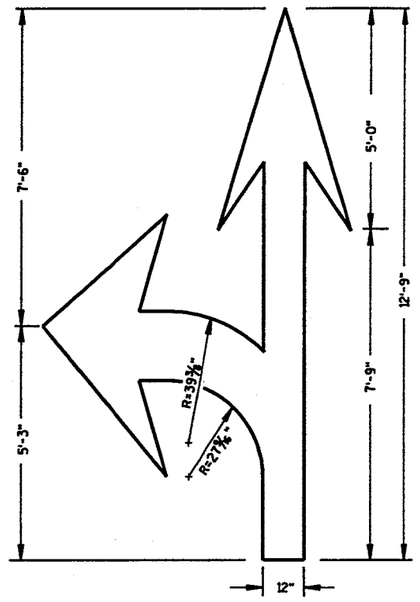

TYPE 3

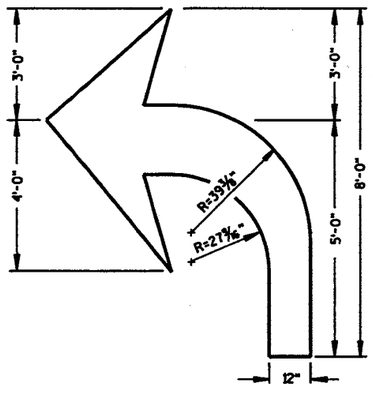

TYPE 2

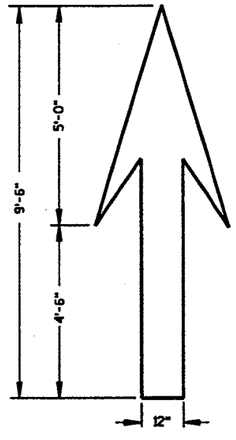

TYPE 1

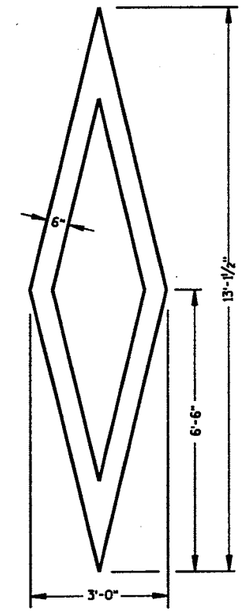

PREFERENTIAL LANE SYMBOL

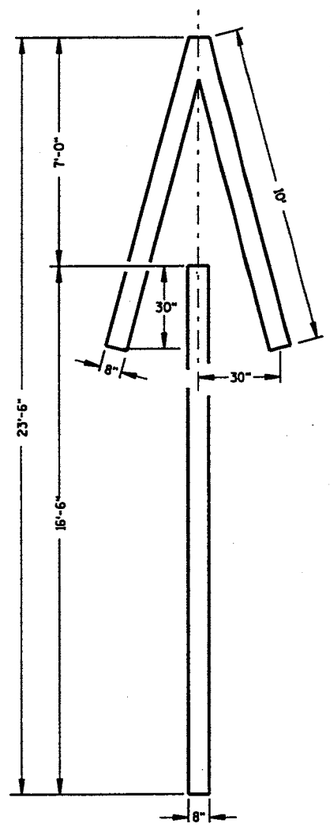

TYPE 4

PAVEMENT MARKING SYMBOLS	
STATE OF WISCONSIN DEPARTMENT OF TRANSPORTATION	
APPROVED DATE FHWA	CHIEF SIGNS AND MARKING ENGINEER

S.D.D. 15 C 7-6a

S.D.D. 15 C 7-6a

6

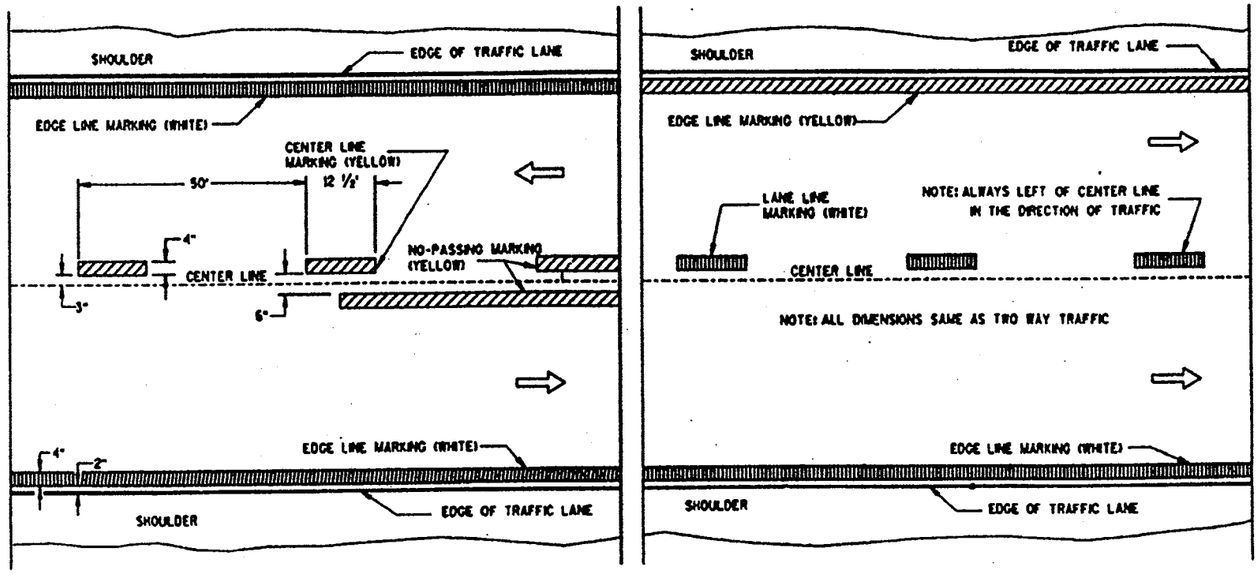

TWO WAY TRAFFIC

ONE WAY TRAFFIC

PERMANENT PAVEMENT MARKING

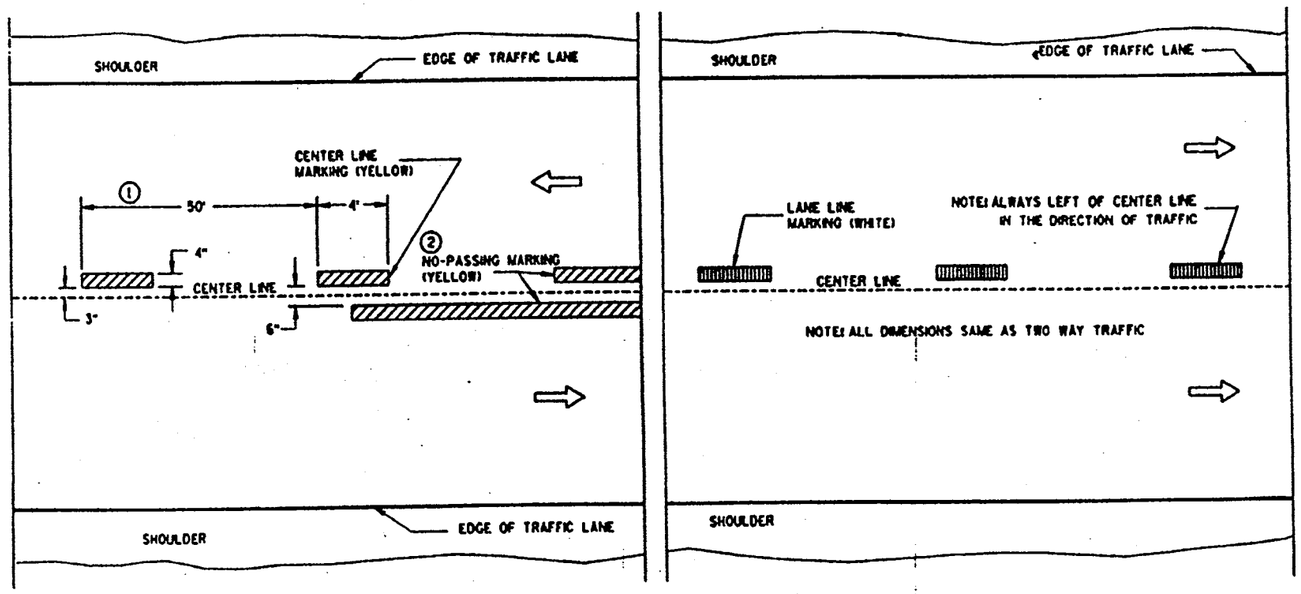

TWO WAY TRAFFIC

ONE WAY TRAFFIC

TEMPORARY (INTERMEDIATE) PAVEMENT MARKING

(SHOWS CYCLE FOR TEMPORARY CENTER LINE OR TEMPORARY LANE LINE MARKING)

GENERAL NOTES

DETAILS OF CONSTRUCTION NOT SHOWN ON THIS DRAWING SHALL CONFORM TO STANDARD SPECIFICATIONS AND SPECIAL PROVISIONS.

① HALF CYCLE LENGTHS (25'±) WITH 2' MINIMUM STRIPE LENGTHS SHALL BE PROVIDED ON ROADWAYS (INCLUDING TEMPORARY TRAVELED WAYS) WITH REVERSE CURVATURE, CURVATURE OF OVER 5 DEGREES OR WHEN DIRECTED BY THE ENGINEER TO MARK UNUSUAL ALIGNMENT OF THE TRAVELED WAY.

② NO PASSING ZONE TEMPORARY PAVEMENT MARKING IS REQUIRED TO BE PLACED, WHERE APPROPRIATE, ALONG WITH CENTERLINE TEMPORARY PAVEMENT MARKING WHEN A SAME DAY PERMANENT PAVEMENT MARKING ITEM IS INCLUDED IN THE CONTRACT.

NOTE

ARROW SYMBOL (⇨) SHOWS DIRECTION OF TRAVEL

PAVEMENT MARKING
(MAINLINE)

STATE OF WISCONSIN
DEPARTMENT OF TRANSPORTATION

APPROVED
9-6-00
DATE
Chester T. Gray
CHIEF SIGNS AND MARKING ENGINEER
FHWA

S.D.D. 15 C 8-9a

S.D.D. 15 C 8-9a

NOTE:
ARROW SYMBOL (⇨) SHOWS DIRECTION OF TRAVEL

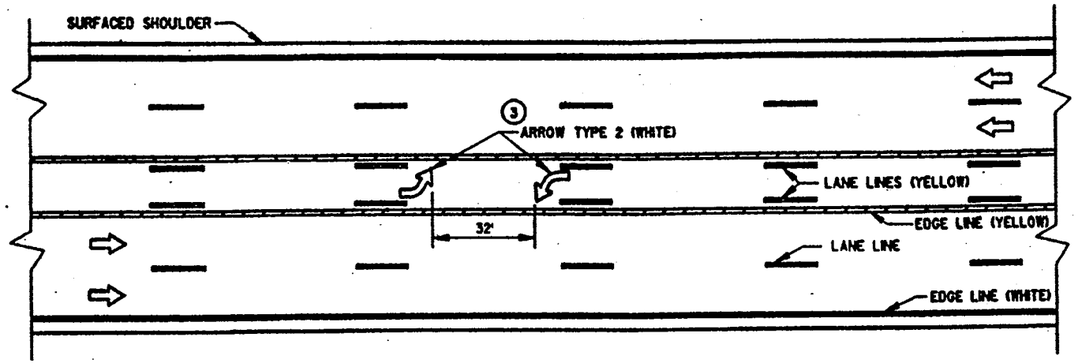

TWO WAY LEFT TURN LANE

NOTES:

1. STOP BAR IS REQUIRED ONLY WHEN SPECIFIED IN THE CONTRACT.
2. DISTANCE MAY BE ADJUSTED TO ACCOMODATE SHORT LEFT TURN LANES. AS APPROVED BY THE ENGINEER.
3. A SET OF ARROWS IS REQUIRED EVERY 400' OR NEAR INTERSECTIONS OR DRIVEWAYS WITH TURNING TRAFFIC.

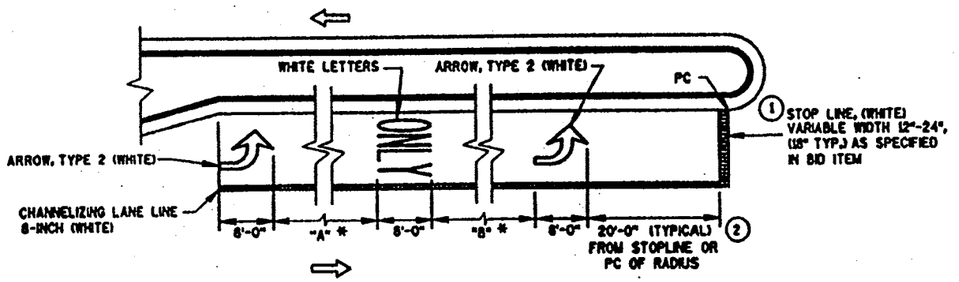

LEFT TURN LANE
(LENGTH 108' TO 167')

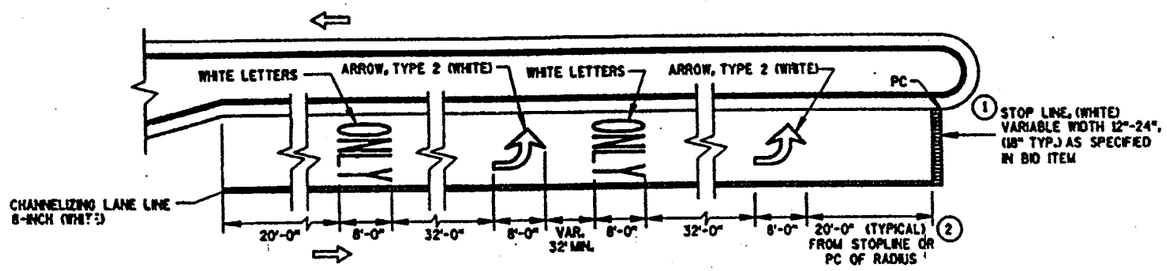

LEFT TURN LANE
(LENGTH OVER 167')

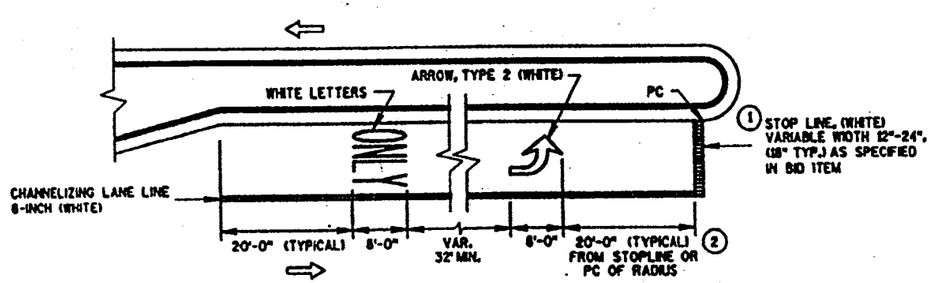

LEFT TURN LANE
(LENGTH UNDER 108')

PAVEMENT MARKING
(LEFT TURN LANE)

STATE OF WISCONSIN
DEPARTMENT OF TRANSPORTATION

S.D.D. 15 C 8-9d

S.D.D. 15 C 8-9d

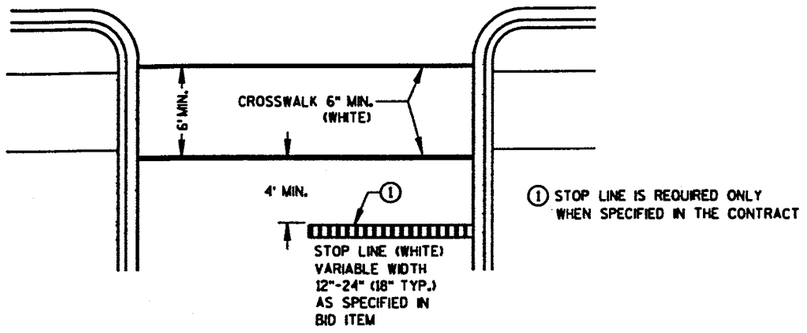

STOP LINE AND CROSSWALK

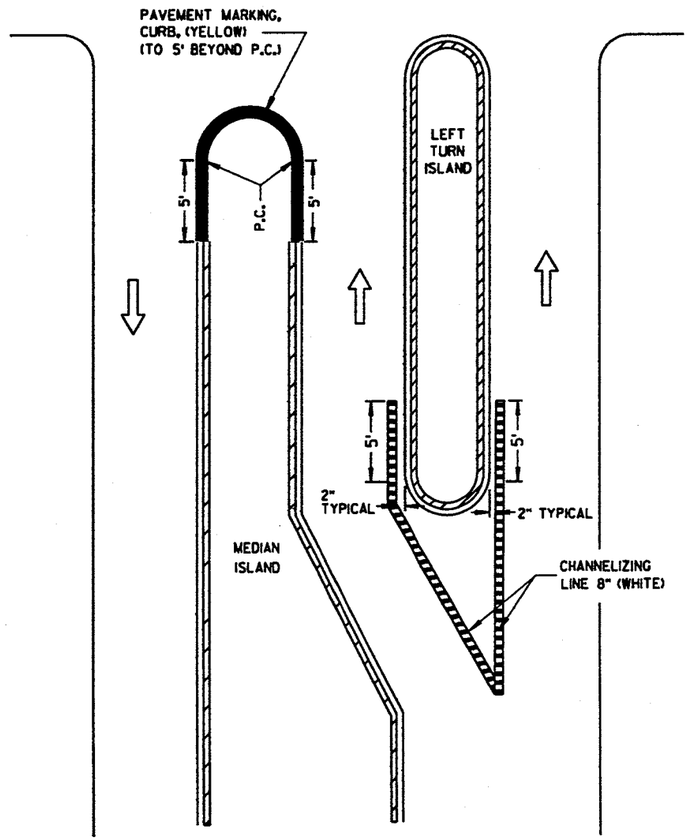

LEFT TURN & MEDIAN ISLAND

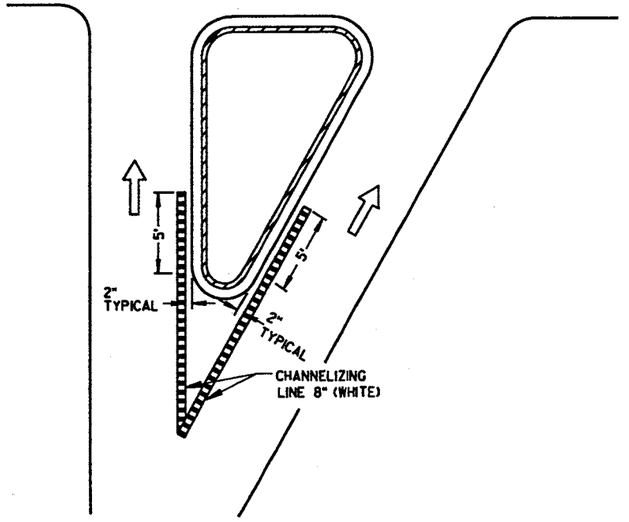

RIGHT TURN ISLAND

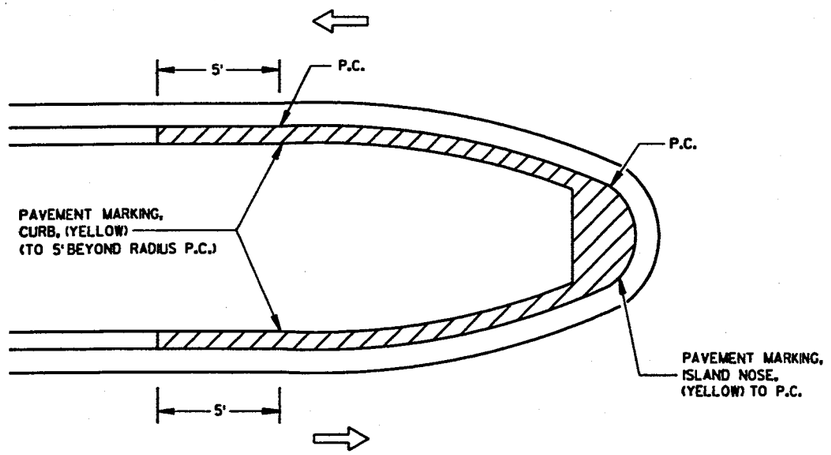

MEDIAN ISLAND WITH SLOPED NOSE

NOTE:
ARROW SYMBOL (⇨)
SHOWS DIRECTION OF TRAVEL

PAVEMENT MARKING
(ISLANDS, STOP LINE & CROSS WALK)

STATE OF WISCONSIN
DEPARTMENT OF TRANSPORTATION

APPROVED

DATE — CHIEF SIGNS AND MARKING ENGINEER

FHWA

6

S.D.D. 15 C 8-10e

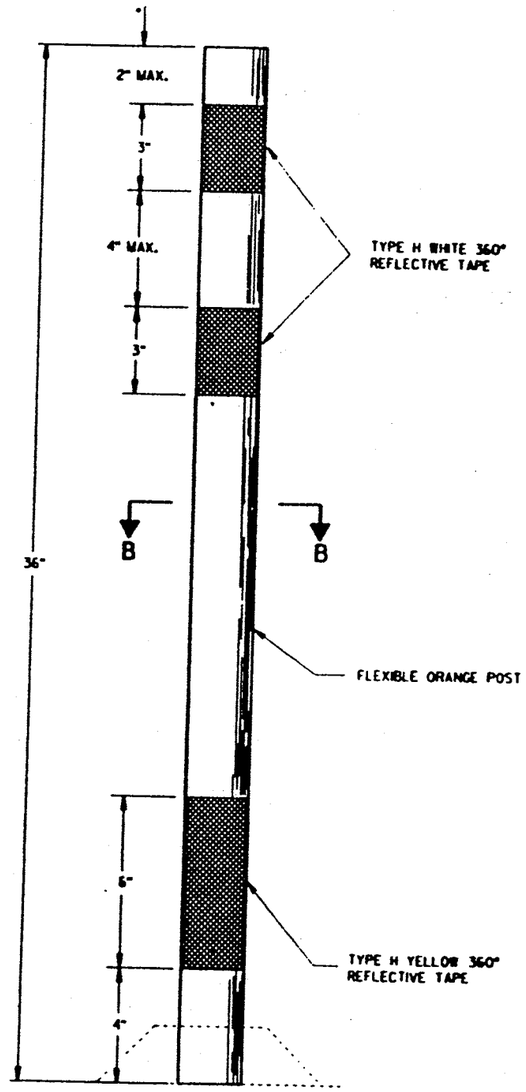

FLEXIBLE TUBULAR MARKER POST

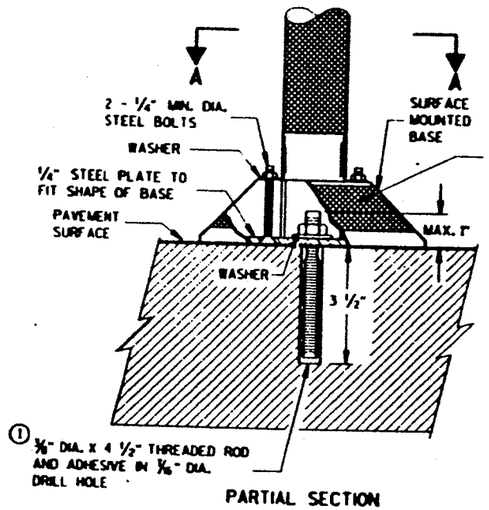

PARTIAL SECTION TO SHOW BOLTS

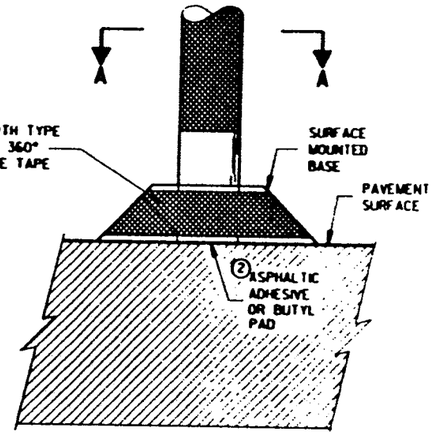

POST BASES ON NEW OR EXISTING PAVEMENT

GENERAL NOTES

DETAILS OF CONSTRUCTION NOT SHOWN ON THIS DRAWING SHALL CONFORM TO THE PERTINENT REQUIREMENTS OF THE STANDARD SPECIFICATIONS AND APPLICABLE SPECIAL PROVISIONS.

SURFACE MOUNTED BASES SHALL BE FURNISHED IN ACCORDANCE WITH MANUFACTURERS RECOMMENDATIONS TO BE COMPATIBLE WITH FLEXIBLE TUBULAR MARKER POSTS TO A SIZE AND SHAPE THAT WILL PROVIDE A STABLE POST FOUNDATION WHEN SECURED TO THE PAVEMENT.

① THREADED ROD SHALL BE MACHINED DOWN TO 0.280 INCH DIA. 1¼ INCHES FROM THE TOP.

② THE ASPHALTIC ADHESIVE OR BUTYL PAD FURNISHED SHALL BE IN ACCORDANCE WITH MANUFACTURER'S RECOMMENDATIONS.

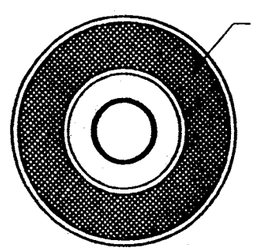

SECTION A-A

SURFACE MOUNTED BASE

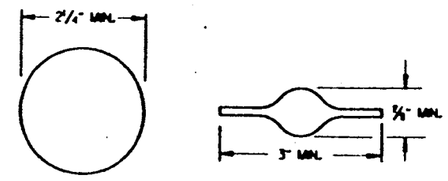

SECTION B-B

ALTERNATIVE SHAPES

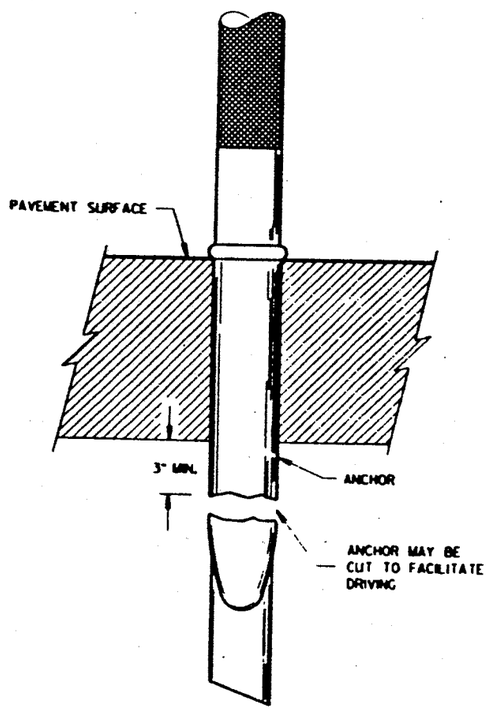

POST ANCHOR AND BASE ON PAVEMENT WHICH WILL BE REMOVED

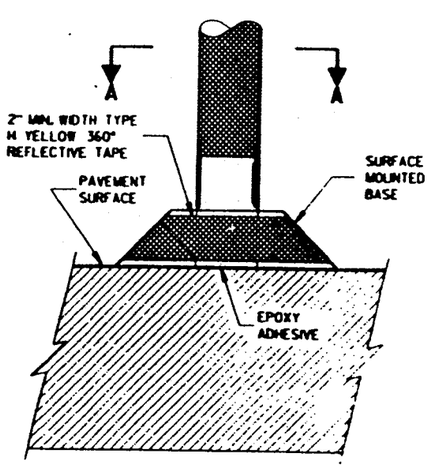

FLEXIBLE TUBULAR MARKER POST, ANCHOR & BASES
STATE OF WISCONSIN DEPARTMENT OF TRANSPORTATION
APPROVED 2/17/94 DATE — STATE TRAFFIC ENGINEER FOR MSYS — FHWA

S.D.D. 15 C 11-5

S.D.D. 15 C 11-5

TWO-LANE ROADWAY

SYMBOLS

WORK AREA

FLAGGER, EQUIPPED WITH STOP/SLOW PADDLE FASTENED ON SUPPORT STAFF

SIGN ON PORTABLE OR PERMANENT SUPPORT

W20-7b

USE OF THE "BE PREPARED TO STOP" SIGN IS OPTIONAL. WHEN USED, THIS SIGN SHALL BE LOCATED BETWEEN THE W20-7a AND W20-4 SIGNS. A 500' TYPICAL SPACING SHALL BE PROVIDED BETWEEN THE SIGNS.

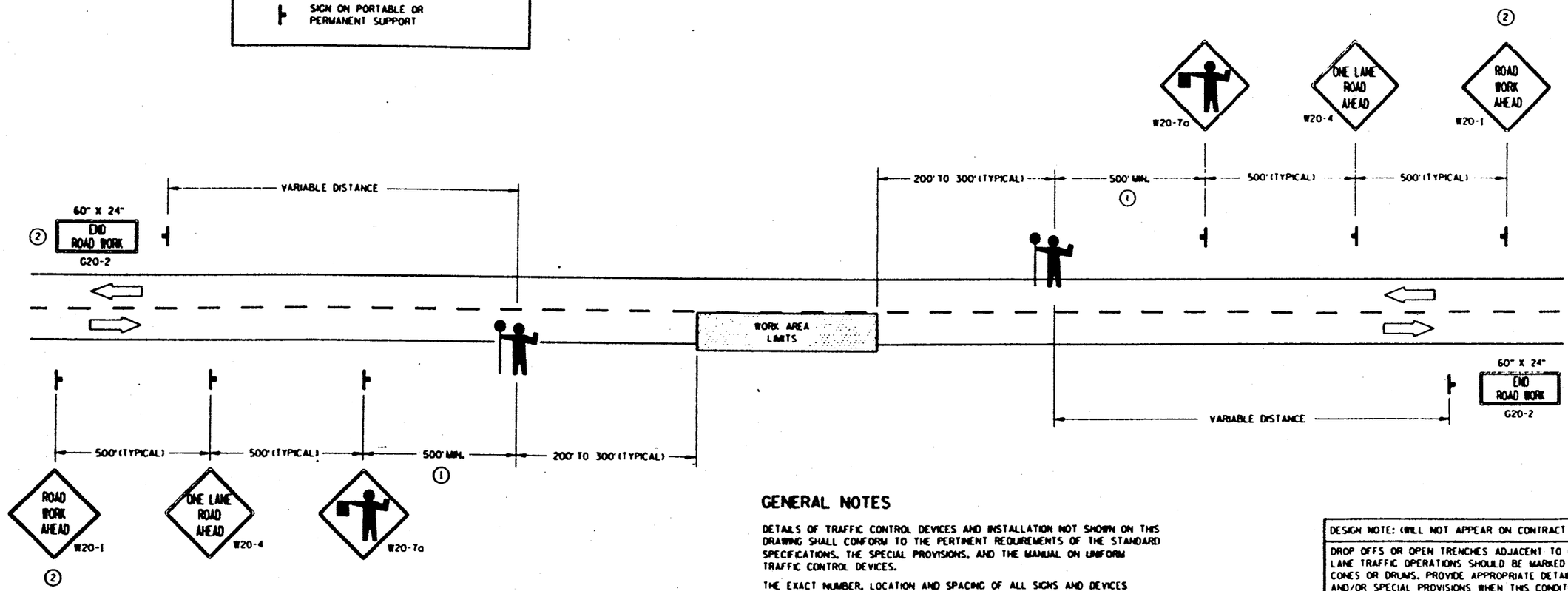

① FOR A MOVING WORK OPERATION,
SIGNING FOR BOTH DIRECTIONS SHALL BE REESTABLISHED (AS SIMULTANEOUSLY AS PRACTICAL) AT APPROXIMATELY 3500 FOOT INTERVALS IN THE MOVING WORK OPERATION OR AS DIRECTED BY THE ENGINEER.

② SIGN NOT REQUIRED IF FLAGGING OPERATION OCCURS WITHIN A SIGNED ROAD WORK ZONE AREA.

GENERAL NOTES

DETAILS OF TRAFFIC CONTROL DEVICES AND INSTALLATION NOT SHOWN ON THIS DRAWING SHALL CONFORM TO THE PERTINENT REQUIREMENTS OF THE STANDARD SPECIFICATIONS, THE SPECIAL PROVISIONS, AND THE MANUAL ON UNIFORM TRAFFIC CONTROL DEVICES.

THE EXACT NUMBER, LOCATION AND SPACING OF ALL SIGNS AND DEVICES (AND THE LOCATION OF ALL FLAGGERS) SHALL BE ADJUSTED TO FIT FIELD CONDITIONS AS DIRECTED BY THE ENGINEER.

THE FIRST ADVANCE WARNING SIGN SHOULD TYPICALLY BE LOCATED IN ADVANCE OF THE ANTICIPATED TRAFFIC BACKUP OR QUEUE.

WHEN A SIDE ROAD OR RAMP INTERSECTS THE FACILITY ON WHICH THE WORK IS BEING PERFORMED, ADDITIONAL TRAFFIC CONTROLS SHALL BE PROVIDED AS SPECIFIED IN THE PLANS AND/OR THE SPECIAL PROVISIONS OR AS DIRECTED BY THE ENGINEER.

FLAGGERS SHALL BE IN SIGHT OF EACH OTHER OR IN DIRECT COMMUNICATION AT ALL TIMES. THEY SHALL BE EQUIPPED WITH STOP/SLOW PADDLES FASTENED ON SUPPORT STAFFS. WHEN THE FLAGGING OPERATION IS NOT IN EFFECT, THE "FLAGGER AHEAD", THE "ROAD WORK AHEAD" AND THE ONE LANE ROAD AHEAD" SIGNS SHALL BE COVERED OR REMOVED AND THE HIGHWAY RESTORED TO NORMAL OPERATION.

ALL SIGNS ARE 48" X 48" UNLESS OTHERWISE NOTED.

DESIGN NOTE: (WILL NOT APPEAR ON CONTRACT PLANS)

DROP OFFS OR OPEN TRENCHES ADJACENT TO ONE LANE TRAFFIC OPERATIONS SHOULD BE MARKED WITH CONES OR DRUMS. PROVIDE APPROPRIATE DETAILS AND/OR SPECIAL PROVISIONS WHEN THIS CONDITION IS EXPECTED.

THIS DETAIL IS APPROPRIATE FOR RURAL HIGH SPEED CONDITIONS. URBAN LOWER SPEED CONDITIONS REQUIRE A CLOSER SIGN SPACING.

TRAFFIC CONTROL FOR LANE CLOSURE (SUITABLE FOR MOVING OPERATIONS)

STATE OF WISCONSIN
DEPARTMENT OF TRANSPORTATION

APPROVED
2/17/94 DATE
STATE TRAFFIC ENGINEER FOR HWYS

FHWA

S.D.D. 15 C 12-2

S.D.D. 15 C 12-2

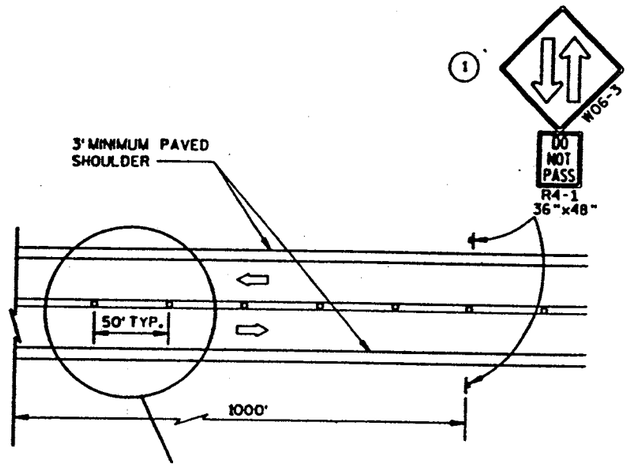

TWO LANE, TWO WAY OPERATION

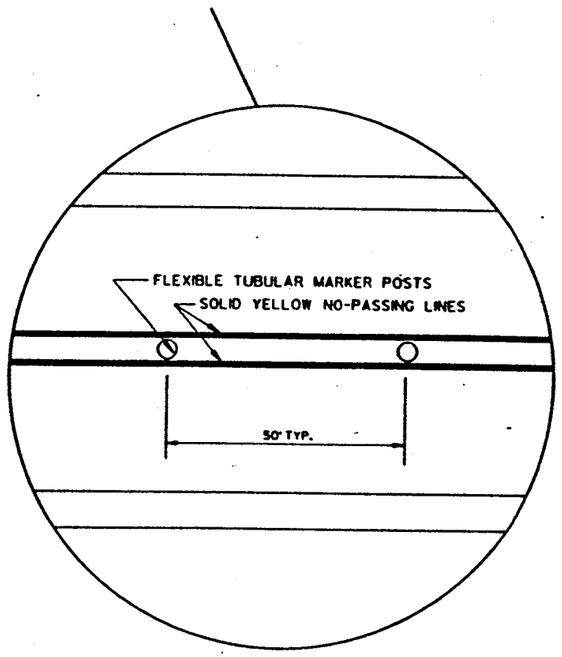

GENERAL NOTES :

ALL SIGNS ARE 48"x48" UNLESS OTHERS NOTED.

"WO" IS THE SAME AS "W" EXCEPT THE BACKGROUND IS ORANGE.

ANY SIGNS TEMPORARY OR EXISTING, WHICH CONFLICT WITH THE TRAFFIC CONTROL "IN USE" SHALL BE REMOVED OR COVERED AS NEEDED AND AS APPROVED BY THE ENGINEER. NO WARNING LIGHTS SHALL BE WORKING ON "COVERED" OR "DOWNED" SIGNS.

THE EXACT NUMBER, LOCATION, AND SPACING OF ALL SIGNS AND DEVICES SHALL BE ADJUSTED TO FIT FIELD CONDITIONS AS APPROVED BY THE ENGINEER.

THE SPACING BETWEEN SIGNS SHOULD BE ADJUSTED TO NOT CONFLICT WITH AND TO PROVIDE A MINIMUM OF 200 FEET, (500 FEET DESIRABLE) DISTANCE TO EXISTING SIGNS.

A SINGLE ROW OF FLEXIBLE TUBULAR MARKERS ON CENTERLINE EXTEND FOR THE ENTIRE LENGTH OF TWO-WAY TRAFFIC @ 50' SPACING.

COVER EXISTING CENTERLINE STRIPE WITH TEMPORARY PAVEMENT MARKING, 4-INCH DOUBLE YELLOW.

R2-1
48"x60"
(BLACK AND WHITE)

IF THE REGULATORY SPEED HAS BEEN REDUCED, A SPEED LIMIT SIGN SHALL BE LOCATED 1500 FEET BEYOND THE END OF THE ACCELERATION LANE OF EACH ENTRANCE RAMP. THERE SHOULD BE A SPEED LIMIT SIGN INCORPORATED A MINIMUM OF EVERY 2 OR 3 MILES.

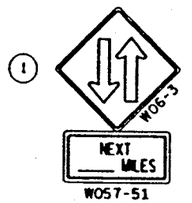

W057-51
48"x24"

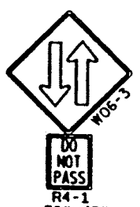

R4-1
36"x48"

THE W06-3 WITH THE W057-51 SHALL BE LOCATED 200' BEYOND THE END OF THE ACCELERATION LANE OF EACH ENTRANCE RAMP AND/OR 500' BEYOND ANY SIDEROAD. THE W06-3 WITH THE R4-1 SHALL BE LOCATED 1000' BEYOND THE W06-3 AND THE W057-51 AND THE SIGNS SHALL BE ALTERNATED WITH ONE MILE INTERVALS BETWEEN W06-3 SIGNS.

LEGEND

- POST WITH ATTACHED SIGN
- FLEXIBLE TUBULAR MARKER AND BASE
- DIRECTION OF TRAFFIC

TRAFFIC CONTROL,
TWO LANE TWO
WAY OPERATION

STATE OF WISCONSIN
DEPARTMENT OF TRANSPORTATION

APPROVED
8-7-80
DATE
Chas. J. Senty
for DIRECTOR, OFFICE OF TRAFFIC
FHWA

S.D.D. 15 D 6-2

S.D.D. 15 D 6-2

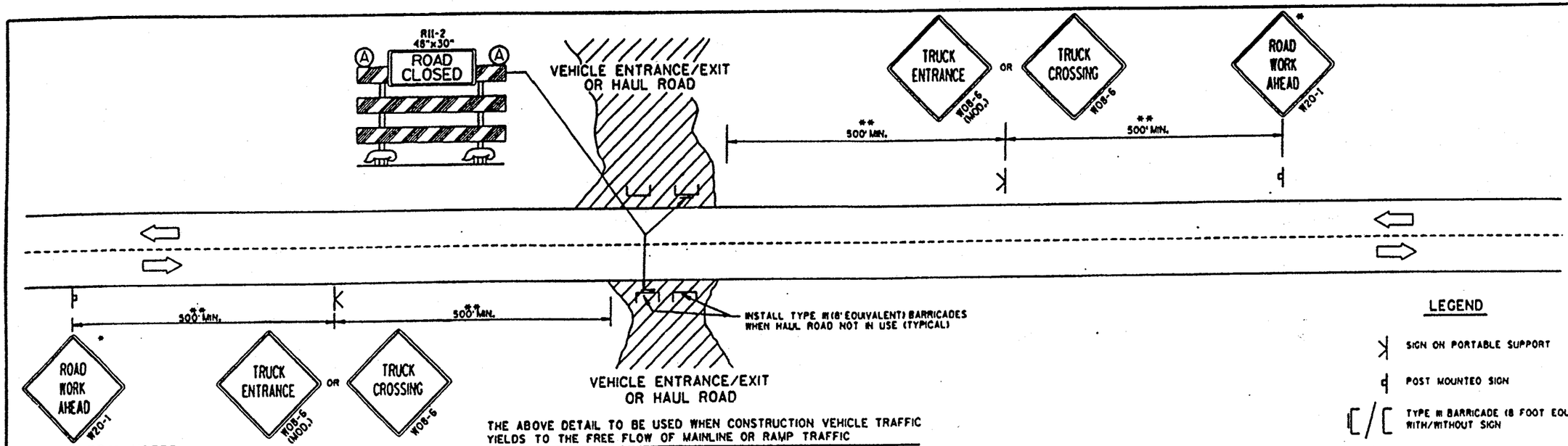

THE ABOVE DETAIL TO BE USED WHEN CONSTRUCTION VEHICLE TRAFFIC YIELDS TO THE FREE FLOW OF MAINLINE OR RAMP TRAFFIC

LEGEND

- SIGN ON PORTABLE SUPPORT
- POST MOUNTED SIGN
- TYPE III BARRICADE (8 FOOT EQUIVALENT) WITH/WITHOUT SIGN
- FLAGGER, EQUIPPED WITH STOP/SLOW PADDLE FASTENED ON SUPPORT STAFF
- (A) WARNING LIGHT, TYPE A, (LOW-INTENSITY FLASHING)
- DIRECTION OF TRAFFIC FLOW

GENERAL NOTES :

THE EXACT NUMBER, LOCATION, AND SPACING OF ALL SIGNS AND DEVICES (AND THE LOCATION OF ALL FLAGGERS) SHALL BE ADJUSTED TO FIT FIELD CONDITIONS AS APPROVED BY THE ENGINEER.

WHEN ACTIVITY REFLECTED BY THE SIGN IS NOT CURRENTLY TAKING PLACE, THE HIGHWAY SHALL BE RESTORED TO NORMAL CONDITION AND THE SIGNS SHALL BE REMOVED, COVERED OR TURNED AWAY FROM TRAFFIC.

WHEN A SIDE ROAD OR RAMP INTERSECTS WITHIN THE ADVANCE SIGNING AREA, ADDITIONAL TRAFFIC CONTROLS SHALL BE PROVIDED AS SPECIFIED IN THE PLANS AND/OR THE SPECIAL PROVISIONS OR AS APPROVED BY THE ENGINEER.

* THESE SIGNS ARE TO BE USED ONLY WHEN VEHICLE ENTRANCE/EXIT CONDITIONS ARE SEPARATED BY MORE THAN 2 MILES FROM PREVIOUS WORK AREA OR SIGNING OR AS ORDERED BY THE ENGINEER.

** 500' SHOWN IS FOR ROADWAYS WITH A NON-CONSTRUCTION REGULATORY SPEED LIMIT OF 45 MPH OR MORE. FOR 35-40 MPH, USE 350', FOR 25-30 MPH, USE 200'.

ALL SIGNS ARE 48"x48" UNLESS OTHERWISE NOTED.

"RO" IS THE SAME AS "W" EXCEPT THE BACKGROUND IS ORANGE.

SIGN LAYOUTS SHALL BE IN ACCORDANCE WITH THE FHWA'S MANUAL OF STANDARD HIGHWAY SIGNS OR THE WISCONSIN STANDARD SIGN PLATES.

THE FIRST ADVANCE WARNING SIGN AND THE W20-7b SIGN SHOULD TYPICALLY BE LOCATED IN ADVANCE OF THE ANTICIPATED TRAFFIC BACKUP OR QUEUE.

FLAGGERS SHALL BE IN SIGHT OF EACH OTHER OR IN DIRECT COMMUNICATION AT ALL TIMES. THEY SHALL BE EQUIPPED WITH STOP/SLOW PADDLES FASTENED ON SUPPORT STAFFS.

WARNING SIGNS THAT WILL BE IN PLACE LESS THAN 7 CONTINUOUS DAYS AND NIGHTS MAY BE MOUNTED ON PORTABLE SUPPORTS.

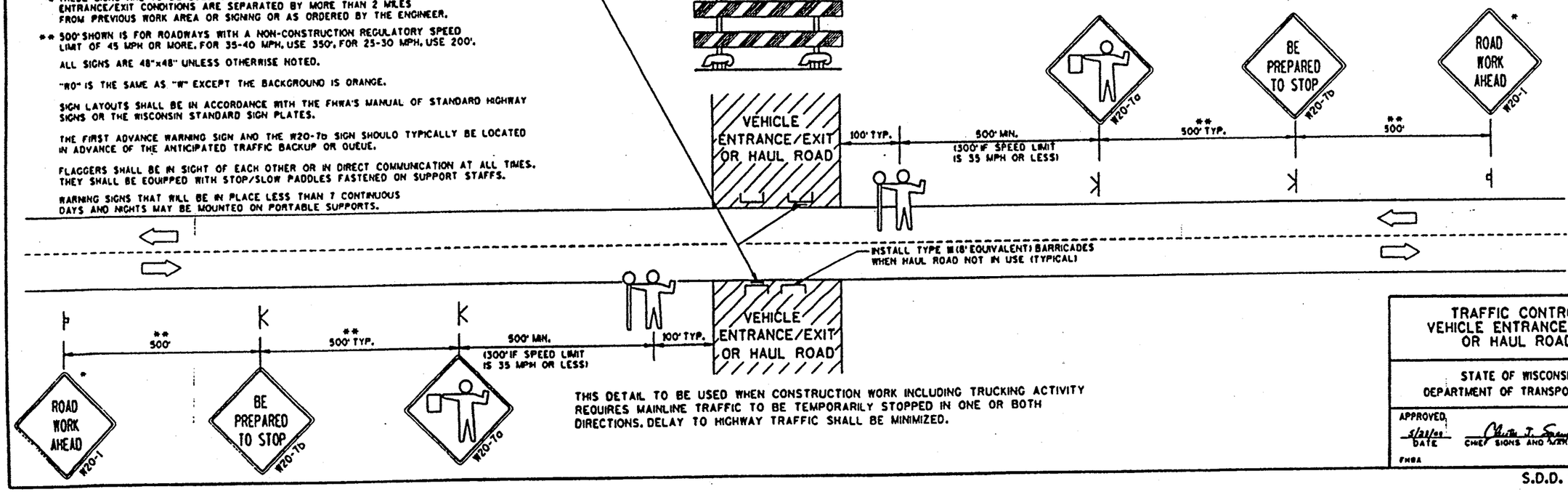

THIS DETAIL TO BE USED WHEN CONSTRUCTION WORK INCLUDING TRUCKING ACTIVITY REQUIRES MAINLINE TRAFFIC TO BE TEMPORARILY STOPPED IN ONE OR BOTH DIRECTIONS. DELAY TO HIGHWAY TRAFFIC SHALL BE MINIMIZED.

TRAFFIC CONTROL, VEHICLE ENTRANCE/EXIT OR HAUL ROAD

STATE OF WISCONSIN
DEPARTMENT OF TRANSPORTATION

APPROVED
5/22/02
DATE
CHIEF SIGNS AND MARKING ENGINEER
FHWA

S.D.D. 15 D 29-1

1-62 D 15 S.D.D.

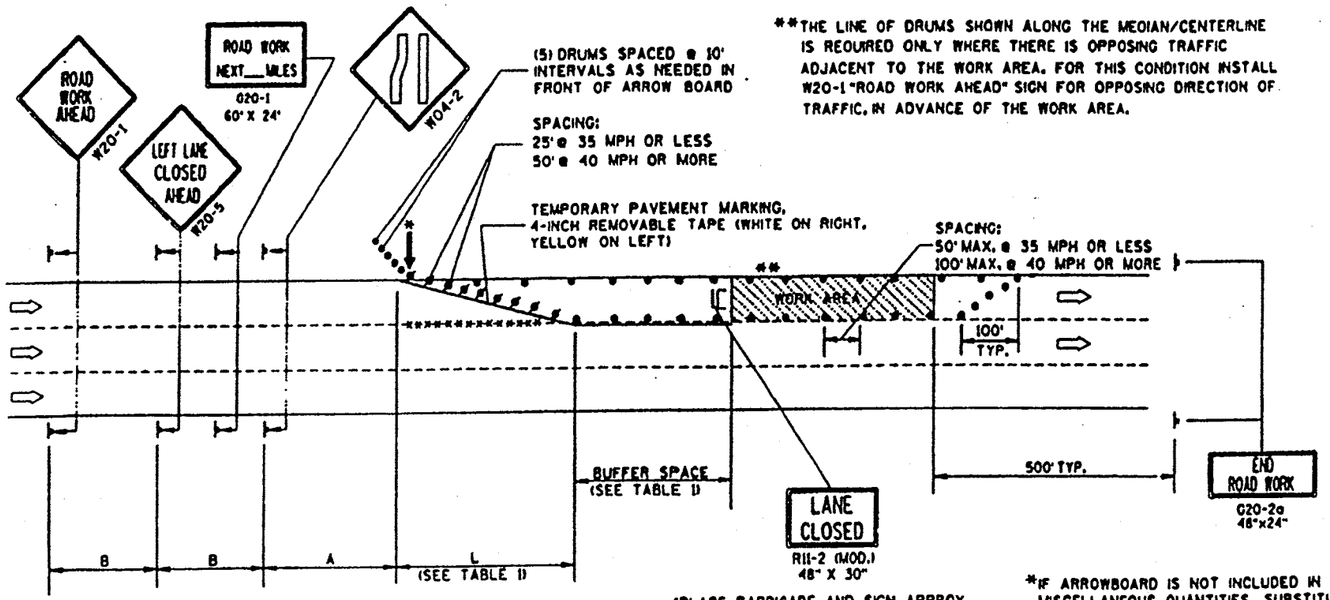

**THE LINE OF DRUMS SHOWN ALONG THE MEDIAN/CENTERLINE IS REQUIRED ONLY WHERE THERE IS OPPOSING TRAFFIC ADJACENT TO THE WORK AREA. FOR THIS CONDITION INSTALL W20-1 "ROAD WORK AHEAD" SIGN FOR OPPOSING DIRECTION OF TRAFFIC, IN ADVANCE OF THE WORK AREA.

B=400' AT 25-30 MPH
700' AT 35-40 MPH
1000' AT 45-55 MPH

A=200' AT 25-30 MPH
350' AT 35-40 MPH
500' AT 45-55 MPH

(PLACE BARRICADE AND SIGN APPROX. EVERY 1000' ACROSS THE CLOSED LANE)

*IF ARROWBOARD IS NOT INCLUDED IN MISCELLANEOUS QUANTITIES, SUBSTITUTE A TYPE III BARRICADE WITH W01-6 SIGN IN THE LANE CLOSURE TAPER.

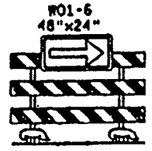

TABLE 1
TAPER AND BUFFER SPACE FOR 12' LANE WIDTH

S	L	BUFFER SPACE
25	125'	55'
30	180'	65'
35	245'	120'
40	320'	170'
45	540'	220'
50	600'	280'
55	660'	335'

FOR LANE WIDTH OTHER THAN 12':

L = WS AT 45 MPH OR GREATER

L = $\frac{WS^2}{60}$ AT 40 MPH OR LESS

L = TAPER LENGTH IN FEET

S = NON-CONSTRUCTION SPEED LIMIT (MPH)

W = WIDTH OF LANE CLOSURE

LEGEND

- ⌀/● DRUM WITH/WITHOUT WARNING LIGHT, TYPE C (STEADY-BURN)
- ↿ POST MOUNTED SIGN
- ↑ ARROW BOARD
- IC/C TYPE III BARRICADE (8' EQUIVALENT) AND WARNING LIGHTS, TYPE A (FLASHING) WITH/WITHOUT SIGN
- ⇨ DIRECTION OF TRAFFIC FLOW
- xxxx REMOVING PAVEMENT MARKING (SEE GENERAL NOTES)

GENERAL NOTES

THIS LANE CLOSURE DETAIL IS TYPICAL FOR CLOSING THE LEFT LANE. FOR A RIGHT LANE CLOSURE, REVERSE THE TRAFFIC CONTROL.

THIS DETAIL MAY BE USED FOR ROADWAYS WITH EITHER TWO OR THREE LANES IN EACH DIRECTION.

THE EXACT NUMBER, LOCATION, AND SPACING OF ALL SIGNS AND DEVICES SHALL BE ADJUSTED TO FIT FIELD CONDITIONS AS APPROVED BY THE ENGINEER.

THE SPACING BETWEEN TRAFFIC CONTROL SIGNS SHOULD BE ADJUSTED TO NOT CONFLICT WITH AND SHOULD PROVIDE A DESIRABLE MINIMUM OF 200 FEET CLEARANCE TO EXISTING SIGNS THAT WILL REMAIN IN PLACE.

ALL SIGNS ARE 48"x48" UNLESS OTHERWISE NOTED. IF NECESSARY DUE TO SPACE CONSTRAINTS IN URBAN AREAS, 36" X 36" SIGNS MAY BE USED IF APPROVED BY DISTRICT TRAFFIC UNIT.

"WO" SIGNS ARE THE SAME AS "W" SIGNS EXCEPT THE BACKGROUND IS ORANGE.

SIGNS THAT WILL BE IN PLACE LESS THAN 7 CONTINUOUS DAYS AND NIGHTS, OR THAT WILL BE PLACED IN A CLOSED LANE, MAY BE MOUNTED ON PORTABLE SUPPORTS.

ANY SIGNS TEMPORARY OR EXISTING, WHICH CONFLICT WITH TRAFFIC CONTROL "IN USE" SHALL BE REMOVED OR COVERED AS NEEDED AND AS APPROVED BY THE ENGINEER.

REMOVE PAVEMENT MARKINGS AND PLACE TEMPORARY PAVEMENT MARKING, REMOVABLE TAPE IF LANE CLOSURE IS TO BE IN PLACE FOR 7 OR MORE CONTINUOUS DAYS AND NIGHTS.

ON UNDIVIDED ROADWAYS, OMIT THE SIGNS SHOWN ON LEFT SIDE OF ROAD.

W20-1, G20-1 AND G20-2A SIGNS ARE NOT REQUIRED IF THE LANE CLOSURE IS WITHIN A LARGER WORK ZONE WHERE THESE SIGNS ARE ALREADY PRESENT.

OMIT G20-1 SIGNS IF LENGTH OF WORK AREA IS 2 MILES OR LESS.

CONSIDER GEOMETRICS WHEN LOCATING SIGNS AND ARROWBOARDS SO THE APPROACHING DRIVER HAS A CLEAR VIEW OF THE ARROWBOARDS AND LANE CLOSURE DRUMS.

PLACE THE ARROWBOARD AS CLOSE AS POSSIBLE TO THE BEGINNING OF THE LANE CLOSURE TAPER, PREFERABLY ON THE SHOULDER OR TERRACE.

CHANNELIZING DEVICES PLACED ADJACENT TO WORK AREA SHALL BE PULLED BACK FROM THE TRAVEL LANE WHEN WORK IS NOT IN PROGRESS.

BARRICADES IN A CLOSED LANE THAT MUST BE MOVED FOR A WORK OPERATION SHALL BE IMMEDIATELY RE-ESTABLISHED UPON COMPLETION OF THE OPERATION OR, FOR CONTINUING OPERATIONS, AT THE END OF EACH WORKING DAY.

WARNING LIGHTS ARE NOT REQUIRED IF THE LANE CLOSURE IS A DAYTIME ONLY OPERATION.

TRAFFIC CONTROL, SINGLE LANE CLOSURE, NON-FREEWAY/EXPRESSWAY

STATE OF WISCONSIN
DEPARTMENT OF TRANSPORTATION

APPROVED
6/23/06
DATE
CHIEF SIGNS AND MARKING ENGINEER

FHWA

S.D.D. 15 D 20-1

S.D.D. 15 D 20-1

STATE PROJECT NUMBER: 6651-01-00

HWY: CTH N

COUNTY: MARATHON

EARTHWORK SUMMARY

SHEET NO: 9/

E

STA.	PHASE 1 CUT C.Y.	ROCK CUT C.Y.	MARSH CUT C.Y.	TOPSOIL CUT C.Y.	FILL C.Y.	CUMULATIVE VOLUME CUT C.Y.	CUMULATIVE VOLUME FILL C.Y.	MASS HAUL C.Y.
0+00	0	0	0	0	0	0	0	0
50	110	0	0	0	0	110	0	110
100	151	0	0	0	0	151	0	261
150	348	0	0	0	0	348	0	609
200	595	0	0	0	0	595	0	1204
250	752	93	0	0	0	752	0	1956
300	1039	185	0	0	0	1039	0	2995
350	855	315	0	0	0	855	0	3850
400	691	555	0	0	0	691	0	4541
450	614	555	0	0	0	614	0	5155
500	745	315	0	0	0	745	0	5900
550	781	185	0	0	0	781	0	6681
600	824	0	0	0	0	824	0	7505
650	668	0	0	0	4	668	4	8169
700	495	0	0	0	10	495	10	8654
750	474	0	0	0	4	474	4	9124
800	398	0	0	0	12	398	12	9510
850	357	0	0	0	34	357	34	9833
900	312	0	0	0	40	312	40	10105
950	273	29	0	0	29	273	29	10349
1000	396	0	0	0	13	396	13	10732
1050	127	0	0	0	5	127	5	10854
1100	46	0	0	0	28	46	28	10872
1150	47	0	0	0	65	47	65	10854
1200	31	0	0	0	89	31	89	10796
1250	27	0	0	0	81	27	81	10742
1300	23	0	0	0	109	23	109	10656
1350	18	0	0	0	131	18	131	10543
1400	0	0	0	0	167	0	167	10376
1450	0	0	185	0	342	0	527	9849
1500	0	0	195	0	436	0	631	9218
1550	0	0	195	0	404	0	599	8619
1600	0	0	185	0	152	0	337	8282
1650	0	0	185	0	528	0	713	7569
1700	0	0	185	0	515	0	700	6869
1750	0	0	185	0	489	0	674	6195
1800	0	0	185	0	420	0	605	5590
1850	0	0	93	0	272	0	365	5225
1900	13	0	0	0	215	13	215	5023
1950	46	0	0	0	97	46	97	4972
2000	68	0	0	0	15	68	15	5025
2050	214	0	0	0	6	214	6	5233
2100	190	0	0	0	0	190	0	5423
2150	167	0	0	0	0	167	0	5590
2200	279	0	0	0	0	279	0	5869
2250	325	0	0	0	0	325	0	6194
2300	398	0	0	0	0	398	0	6592
2350	465	0	0	0	0	465	0	7057
2400	531	0	0	0	0	531	0	7588
2450	477	0	0	0	0	477	0	8065
2500	501	0	0	0	0	501	0	8566
2550	465	0	0	0	0	465	0	9031
2600	500	0	0	0	0	500	0	9531
2650	418	0	0	0	0	418	0	9949
2700	313	0	0	0	0	313	0	10262
2750	277	0	0	0	0	277	0	10539
2800	247	0	0	0	0	247	0	10786
2850	215	0	0	0	0	215	0	11001
2900	74	0	0	0	4	74	4	11071
2950	64	0	0	0	54	64	54	11081

STA.	PHASE 1 CUT C.Y.	ROCK CUT C.Y.	MARSH CUT C.Y.	TOPSOIL CUT C.Y.	FILL C.Y.	CUMULATIVE VOLUME CUT C.Y.	CUMULATIVE VOLUME FILL C.Y.	MASS HAUL C.Y.
3000	56	0	0	0	97	56	97	11040
3050	49	0	0	0	212	49	212	10877
3100	44	0	0	0	288	44	288	10633
3150	39	0	0	0	349	39	349	10323
3200	16	0	0	0	557	16	557	9782
3250	14	0	0	0	657	14	657	9139
3300	12	0	61	0	603	12	664	8487
3350	11	0	70	0	475	11	545	7953
3400	11	0	237	0	342	11	579	7385
3450	11	0	286	0	336	11	622	6774
3500	10	0	288	0	307	10	595	6189
3550	10	0	280	0	290	10	570	5629
3600	9	0	261	0	300	9	561	5077
3650	17	0	270	0	286	17	556	4538
3700	17	0	285	0	276	17	561	3994
3750	18	0	275	0	275	18	550	3462
3800	20	0	266	0	276	20	542	2940
3850	20	0	269	0	269	20	538	2422
3900	20	0	245	0	274	20	519	1923
3950	21	0	230	0	282	21	512	1432
4000	21	0	214	0	265	21	479	974
4050	21	0	187	0	265	21	452	543
4100	24	0	148	0	260	24	408	159
4150	0	0	126	0	202	0	328	-169
4200	0	0	130	0	124	0	254	-423
4250	0	0	74	0	0	0	74	-497
4300	0	0	0	0	0	0	0	-497
4350	0	0	0	0	0	0	0	-497
4400	0	0	658	0	835	0	1493	-1990
4450	0	0	785	0	947	0	1732	-3722
4500	0	0	650	0	950	0	1600	-5322
4550	0	0	801	0	989	0	1790	-7112
4600	0	0	440	273	892	0	1605	-8717
4650	0	0	0	264	630	0	894	-9611
4700	0	0	0	255	317	0	572	-10183
4750	0	0	0	229	565	0	794	-10977
4800	0	0	0	225	211	0	436	-11413
4850	0	0	0	250	606	0	856	-12269
4900	0	0	0	253	571	0	824	-13093
4950	0	0	0	243	379	0	622	-13715
5000	0	0	0	234	217	0	451	-14166
5050	0	0	0	230	128	0	358	-14524
5100	0	0	0	224	83	0	307	-14831
5150	0	0	0	221	70	0	291	-15122
5200	0	0	0	223	96	0	319	-15441
5250	0	0	0	223	111	0	334	-15775
5300	0	0	0	223	97	0	320	-16095
5350	0	0	0	221	86	0	307	-16402
5400	0	0	0	218	78	0	296	-16698
5450	0	0	0	214	67	0	281	-16979
5500	95	0	0	124	56	95	180	-17064
5550	0	0	0	85	45	0	130	-17194
5600	0	0	0	46	27	0	73	-17267
5650	10	0	0	181	60	10	241	-17498
5700	0	0	0	225	134	0	359	-17857
5750	0	0	0	229	230	0	459	-18316
5800	0	0	0	228	223	0	451	-18767
5850	0	0	0	220	129	0	349	-19116
5900	0	0	0	216	101	0	317	-19433
5950	0	0	0	208	113	0	321	-19754
6000	0	0	0	205	54	0	259	-20013

PHASE 1 TOTALS						
ROCK CUT C.Y.	MARSH CUT C.Y.	TOPSOIL CUT C.Y.		CUMULATIVE VOLUME CUT C.Y.	CUMULATIVE VOLUME FILL C.Y.	MASS HAUL C.Y.
2,232	9,129	6,190		18,040	38,053	-20,013

PHASE 1 BALANCE	
TOTAL TOPSOIL SALVAGED	6,190
TOTAL COMMON EXCAVATION	18,040
FILL MATERIAL (-)	38,053
CLOVER ROAD FILL (-)	537
BORROW	-20,550
ROCK EXCAVATION	2,232
MARSH EXCAVATION	9,129

STATE PROJECT NUMBER: 6651-01-00

HWY: CTH N

COUNTY: MARATHON

EARTHWORK SUMMARY

SHEET NO: 9.2 E

STA.	PHASE 2						
	CUT C.Y.	MARSH CUT C.Y.	TOPSOIL CUT C.Y.	FILL C.Y.	CUMULATIVE VOLUME CUT C.Y.	CUMULATIVE VOLUME FILL C.Y.	MASS HAUL C.Y.
0+00	0	0	0	0	0	0	0
50	0	0	0	0	0	0	0
100	0	0	0	0	0	0	0
150	0	0	0	0	0	0	0
200	0	0	0	0	0	0	0
250	0	0	0	0	0	0	0
300	0	0	0	0	0	0	0
350	0	0	0	0	0	0	0
400	0	0	0	0	0	0	0
450	0	0	0	0	0	0	0
500	0	0	0	0	0	0	0
550	0	0	0	0	0	0	0
600	0	0	0	0	0	0	0
650	0	0	0	0	0	0	0
700	0	0	0	0	0	0	0
750	0	0	0	0	0	0	0
800	0	0	0	0	0	0	0
850	0	0	0	0	0	0	0
900	0	0	0	0	0	0	0
950	0	0	0	0	0	0	0
1000	0	0	0	0	0	0	0
1050	254	0	0	90	254	90	164
1100	91	0	0	57	91	57	198
1150	140	0	0	65	140	65	273
1200	124	0	0	89	124	89	308
1250	107	0	0	163	107	163	252
1300	94	0	0	218	94	218	126
1350	74	0	0	262	74	262	-60
1400	0	0	0	335	0	335	-395
1450	0	0	0	342	0	342	-737
1500	0	0	0	436	0	436	-1173
1550	0	75	0	404	0	479	-1652
1600	0	93	0	151	0	244	-1896
1650	0	93	0	528	0	621	-2517
1700	0	93	0	515	0	608	-3125
1750	0	93	0	488	0	581	-3706
1800	0	46	0	419	0	465	-4171
1850	0	0	0	271	0	271	-4442
1900	51	0	0	107	51	107	-4498
1950	139	0	0	96	139	96	-4455
2000	68	0	0	15	68	15	-4402
2050	215	0	0	30	215	30	-4217
2100	190	0	0	18	190	18	-4045
2150	166	0	0	5	166	5	-3884
2200	280	0	0	11	280	11	-3615
2250	325	0	0	3	325	3	-3293
2300	399	0	0	0	399	0	-2894
2350	464	0	0	0	464	0	-2430
2400	532	0	0	0	532	0	-1898
2450	478	0	0	0	478	0	-1420
2500	502	0	0	0	502	0	-918
2550	465	0	0	0	465	0	-453
2600	500	0	0	0	500	0	47
2650	419	0	0	8	419	8	458
2700	314	0	0	12	314	12	760
2750	277	0	0	14	277	14	1023
2800	248	0	0	18	248	18	1253
2850	216	0	0	29	216	29	1440
2900	298	0	0	50	298	50	1688
2950	257	0	0	54	257	54	1891

STA.	PHASE 2						
	CUT C.Y.	MARSH CUT C.Y.	TOPSOIL CUT C.Y.	FILL C.Y.	CUMULATIVE VOLUME CUT C.Y.	CUMULATIVE VOLUME FILL C.Y.	MASS HAUL C.Y.
3000	224	0	0	97	224	97	2018
3050	200	0	0	105	200	105	2113
3100	178	0	0	144	178	144	2147
3150	155	0	0	174	155	174	2128
3200	147	0	0	186	147	186	2089
3250	123	0	0	219	123	219	1993
3300	109	0	0	201	109	201	1901
3350	102	32	0	256	102	288	1715
3400	96	24	0	342	98	366	1447
3450	95	86	0	336	95	422	1120
3500	92	96	0	306	92	402	810
3550	88	88	0	289	88	377	521
3600	82	75	0	299	82	374	229
3650	68	88	0	286	68	374	-77
3700	66	98	0	276	66	374	-385
3750	71	98	0	276	71	374	-688
3800	80	98	0	277	80	375	-983
3850	81	98	0	270	81	368	-1270
3900	81	94	0	275	81	369	-1558
3950	83	89	0	282	83	371	-1846
4000	84	103	0	264	84	367	-2129
4050	84	105	0	266	84	371	-2416
4100	94	111	0	260	94	371	-2693
4150	133	132	0	304	133	436	-2996
4200	141	172	0	370	141	542	-3397
4250	131	244	0	473	131	717	-3983
4300	84	350	0	522	84	872	-4771
4350	24	500	0	646	24	1146	-5893
4400	0	0	0	0	0	0	0
4450	0	0	0	0	0	0	0
4500	0	0	0	0	0	0	0
4550	0	0	0	0	0	0	0
4600	0	0	0	0	0	0	0
4650	0	0	0	0	0	0	0
4700	0	0	0	0	0	0	0
4750	0	0	0	0	0	0	0
4800	0	0	0	0	0	0	0
4850	0	0	0	0	0	0	0
4900	0	0	0	0	0	0	0
4950	0	0	0	0	0	0	0
5000	0	0	0	0	0	0	0
5050	0	0	0	0	0	0	0
5100	0	0	0	0	0	0	0
5150	0	0	0	0	0	0	0
5200	0	0	0	0	0	0	0
5250	0	0	0	0	0	0	0
5300	0	0	0	0	0	0	0
5350	0	0	0	0	0	0	0
5400	0	0	0	0	0	0	0
5450	0	0	0	0	0	0	0
5500	0	0	0	0	0	0	0
5550	0	0	0	0	0	0	0
5600	0	0	0	0	0	0	0
5650	0	0	0	0	0	0	0
5700	0	0	0	0	0	0	0
5750	0	0	0	0	0	0	0
5800	0	0	0	0	0	0	0
5850	0	0	0	0	0	0	0
5900	0	0	0	0	0	0	0
5950	0	0	0	0	0	0	0
6000	0	0	0	0	0	0	0

PHASE 2 TOTALS					
MARSH CUT C.Y.	TOPSOIL CUT C.Y.		CUMULATIVE VOLUME CUT C.Y.	CUMULATIVE VOLUME FILL C.Y.	MASS HAUL C.Y.
3,274	0		10,685	16,578	-5,893

PHASE 2 BALANCE	
TOTAL TOPSOIL SALVAGED	0
CTH N COMMON EXCAVATION	10,685
CTH KK COMMON EXCAVATION	2,873
CTH KK FILL (-)	2,071
SOUTH MOUNTAIN COMMON EXCAVATION	2,200
RIB MOUNTAIN COMMON EXCAVATION	1,230
COMMON EXCAVATION	16,988
TOTAL FILL MATERIAL (-)	18,649
BORROW	-1,661
MARSH EXCAVATION	3,274

PROJECT TOTALS		
TOPSOIL SALAGED	6,190	C.Y.
COMMON EXCAVATION	35,028	C.Y.
FILL MATERIAL (-)	57,239	C.Y.
BORROW	-22,211	C.Y.
ROCK EXCAVATION	2,232	C.Y.
MARSH EXCAVATION	12,403	C.Y.

PHASE 1 EARTHWORK MASS DIAGRAM

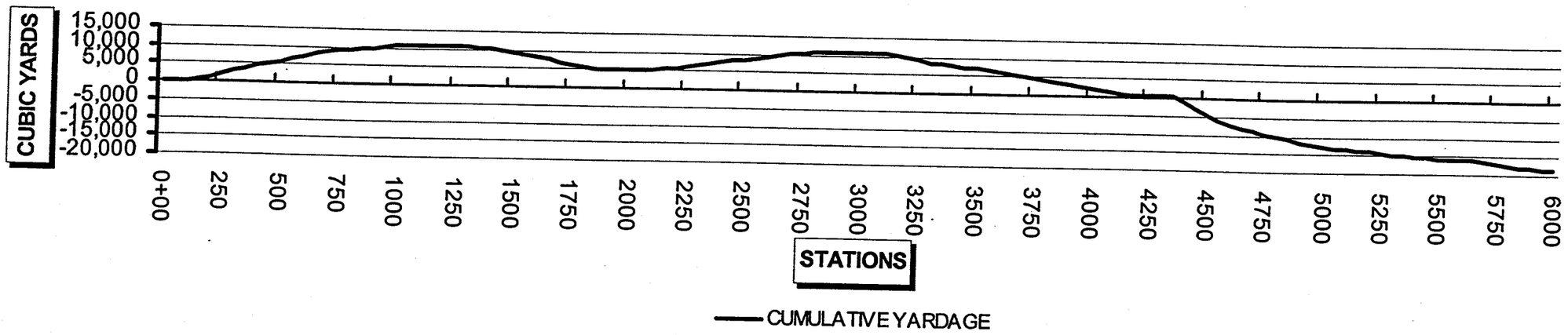

PHASE 2 EARTHWORK MASS DIAGRAM

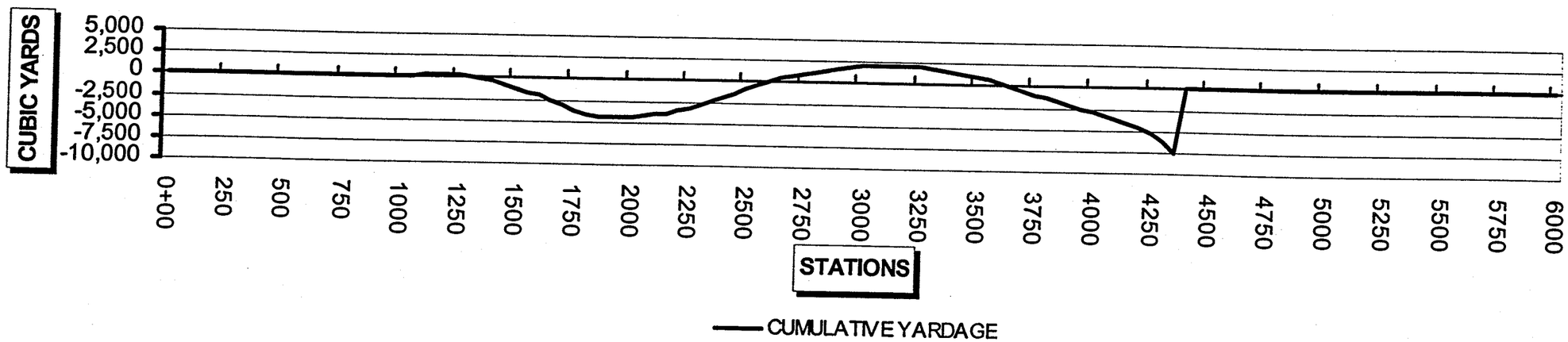

STATE PROJECT NUMBER: 6651-01-00	HWY: CTH N	COUNTY: MARATHON	EARTHWORK MASS DIAGRAMS	SHEET NO: 9.3	E

FILE NAME: [illegible] ORIGINATOR: REV DATE: PLOT DATE:

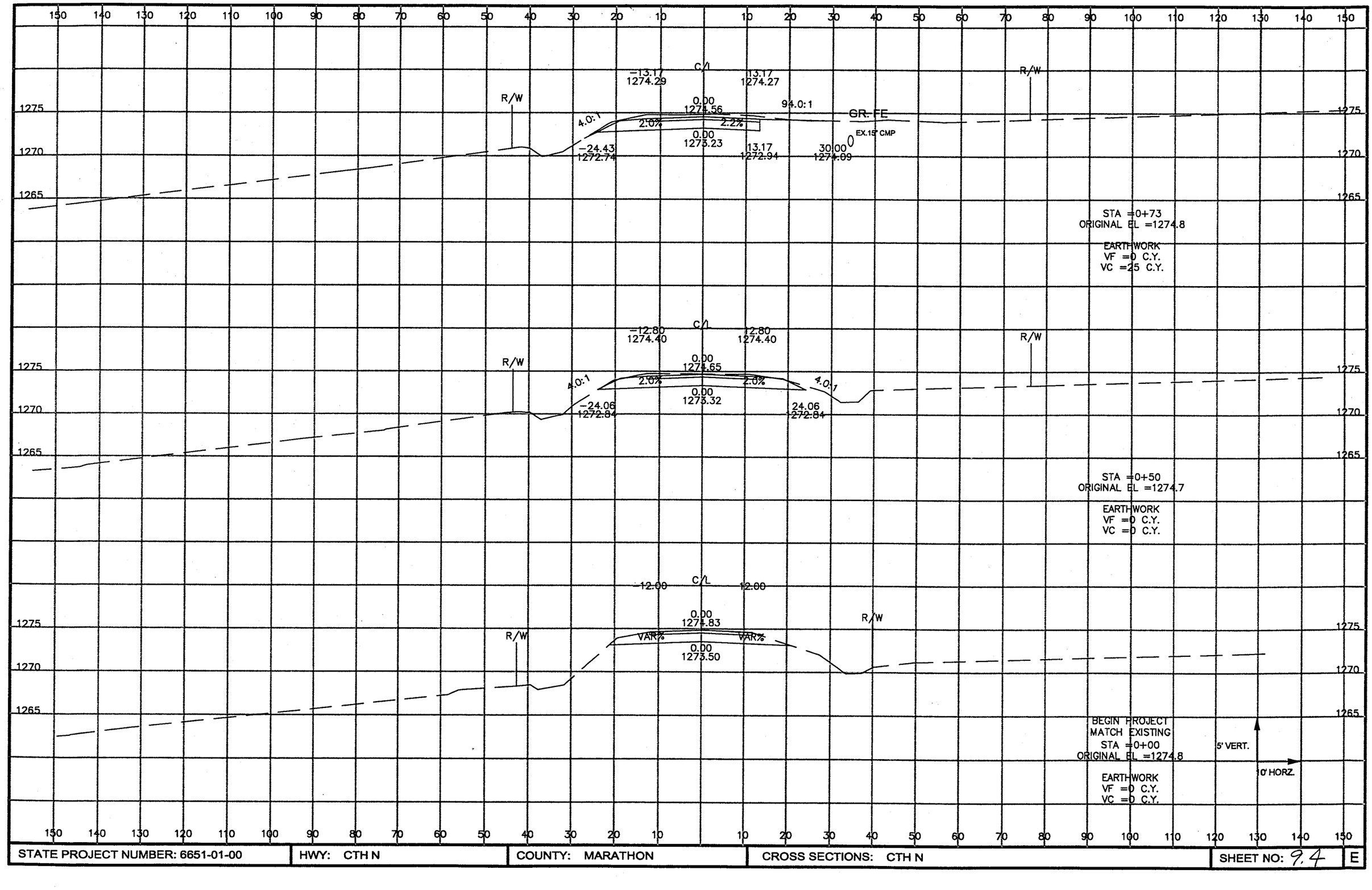

STATE PROJECT NUMBER: 6651-01-00	HWY: CTH N	COUNTY: MARATHON	CROSS SECTIONS: CTH N	SHEET NO: 9.4	E

P:\DRAFT\28940100 CTH N West Arterial\topo survey\rc001001.dwg, Layout1, 10/03/2003 01:41:48 PM

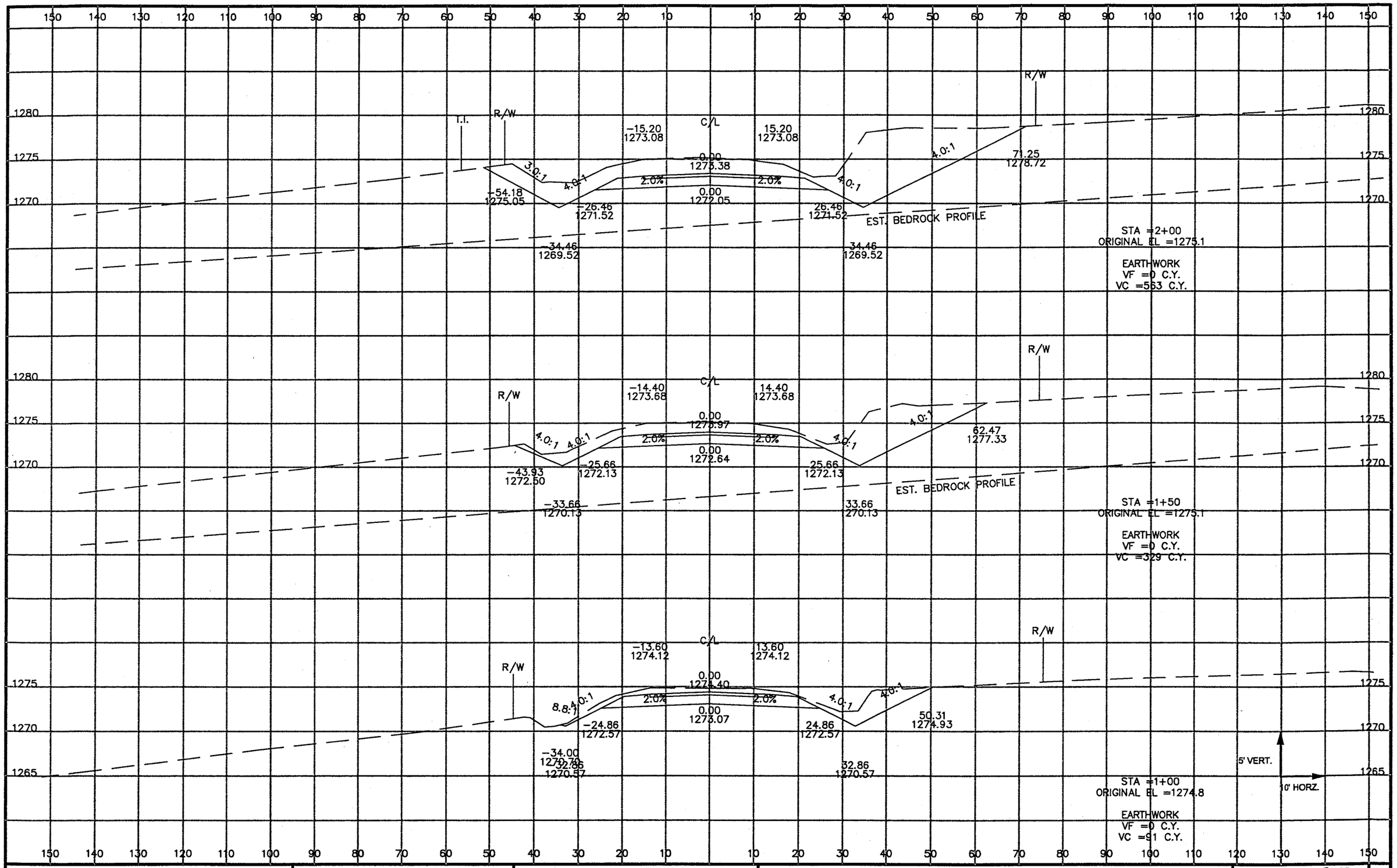

STATE PROJECT NUMBER: 6651-01-00	HWY: CTH N	COUNTY: MARATHON	CROSS SECTIONS: CTH N	SHEET NO: 9.5	E

P:\DRAFT\28940100 CTH N West Arterial\topo survey\rc002001.dwg, Layout1, 10/03/2003 01:42:14 PM

P:\DRAFT\28940100 CTH N West Arterial\topo survey\rc003001.dwg, Layout1, 10/03/2003 01:43:56 PM

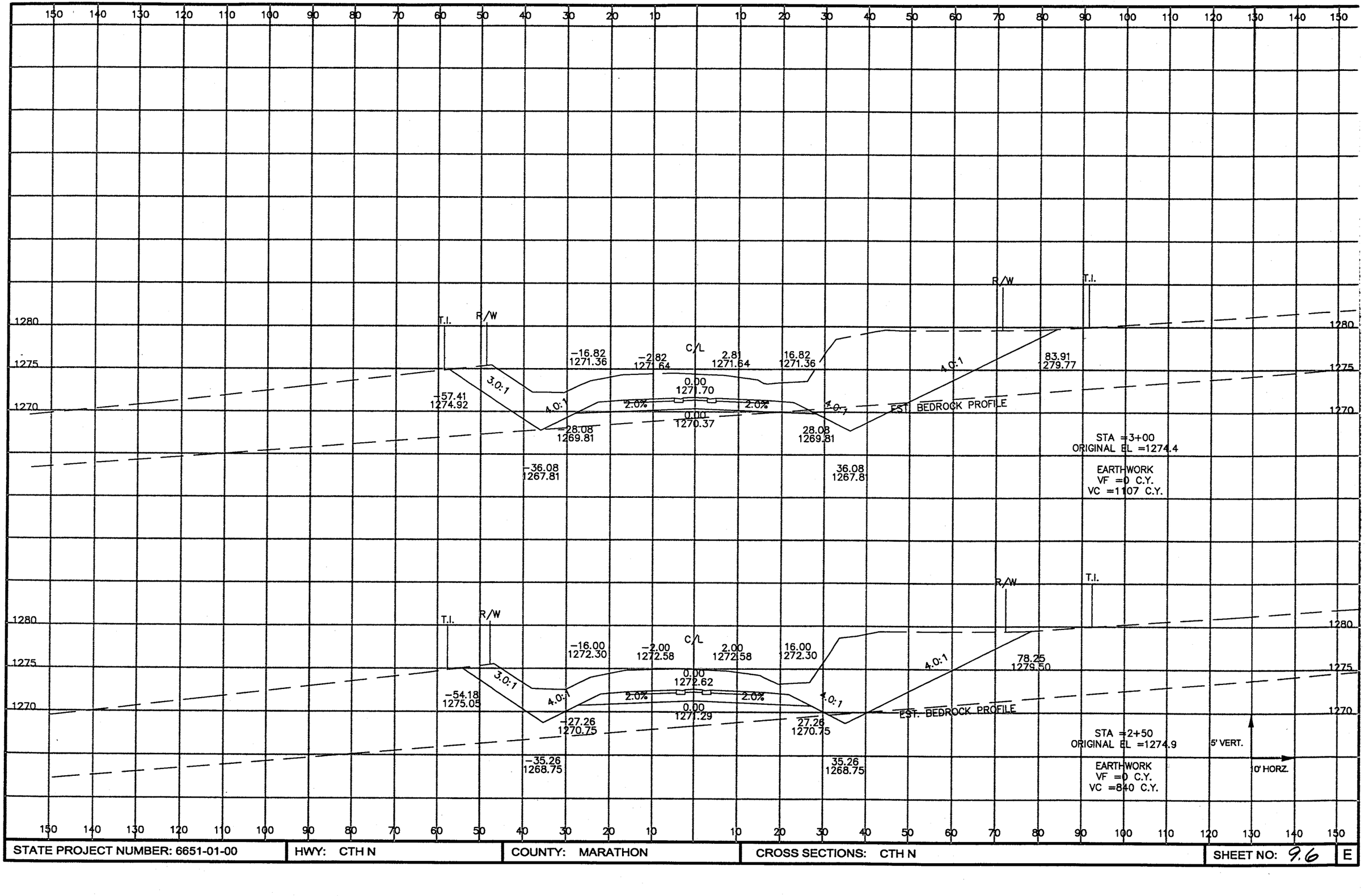

STATE PROJECT NUMBER: 6651-01-00	HWY: CTH N	COUNTY: MARATHON	CROSS SECTIONS: CTH N	SHEET NO: 9.6	E

P:\DRAFT\28940100 CTH N West Arterial\topo survey\rc004001.dwg, Layout1, 10/03/2003 01:46:20 PM

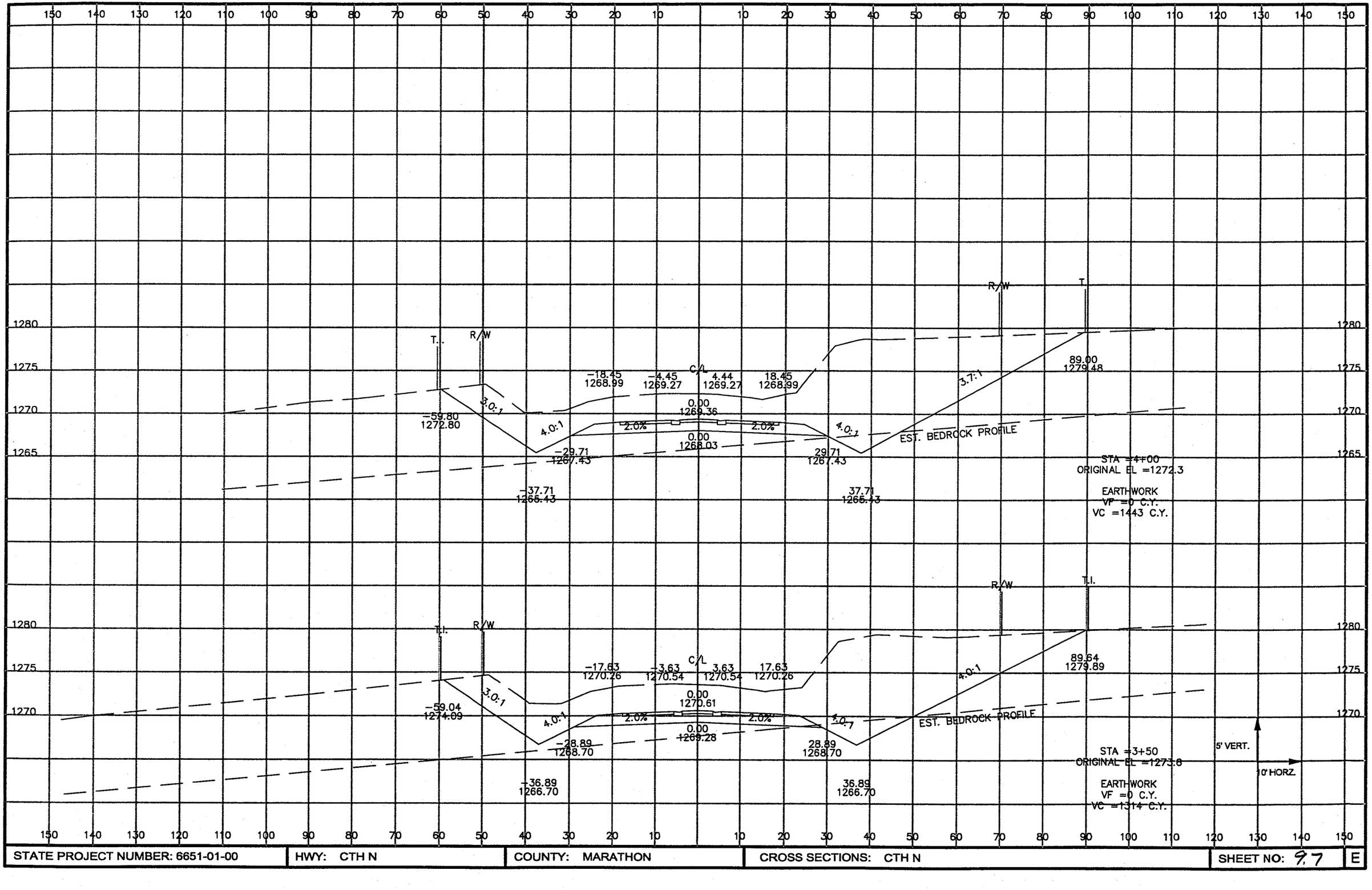

STATE PROJECT NUMBER: 6651-01-00	HWY: CTH N	COUNTY: MARATHON	CROSS SECTIONS: CTH N	SHEET NO: 9.7	E

P:\DRAFT\28940100 CTH N West Arterial\topo survey\rc005001.dwg, Layout1, 10/03/2003 01:46:47 PM

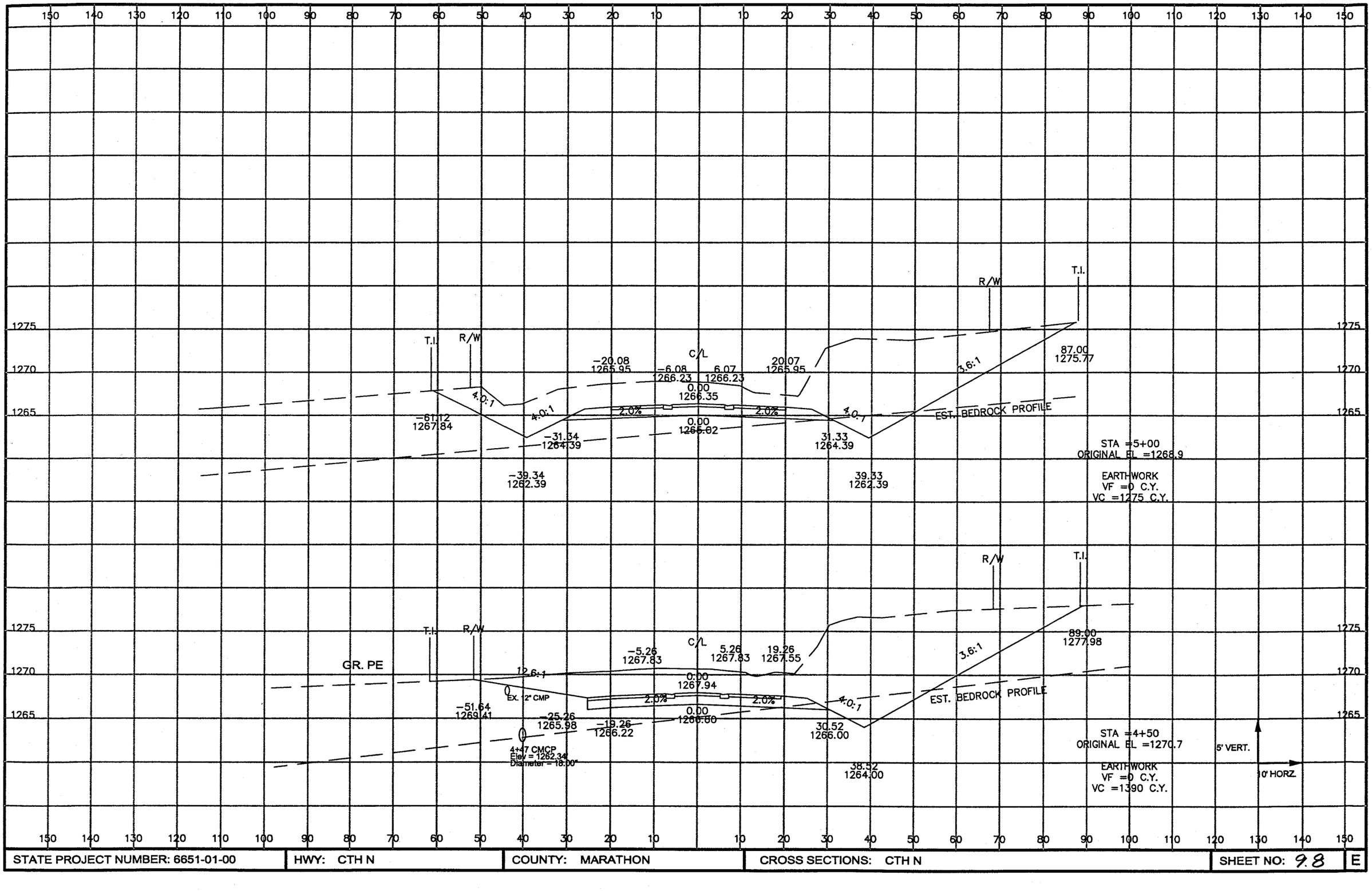

STATE PROJECT NUMBER: 6651-01-00	HWY: CTH N	COUNTY: MARATHON	CROSS SECTIONS: CTH N	SHEET NO: 9.8	E

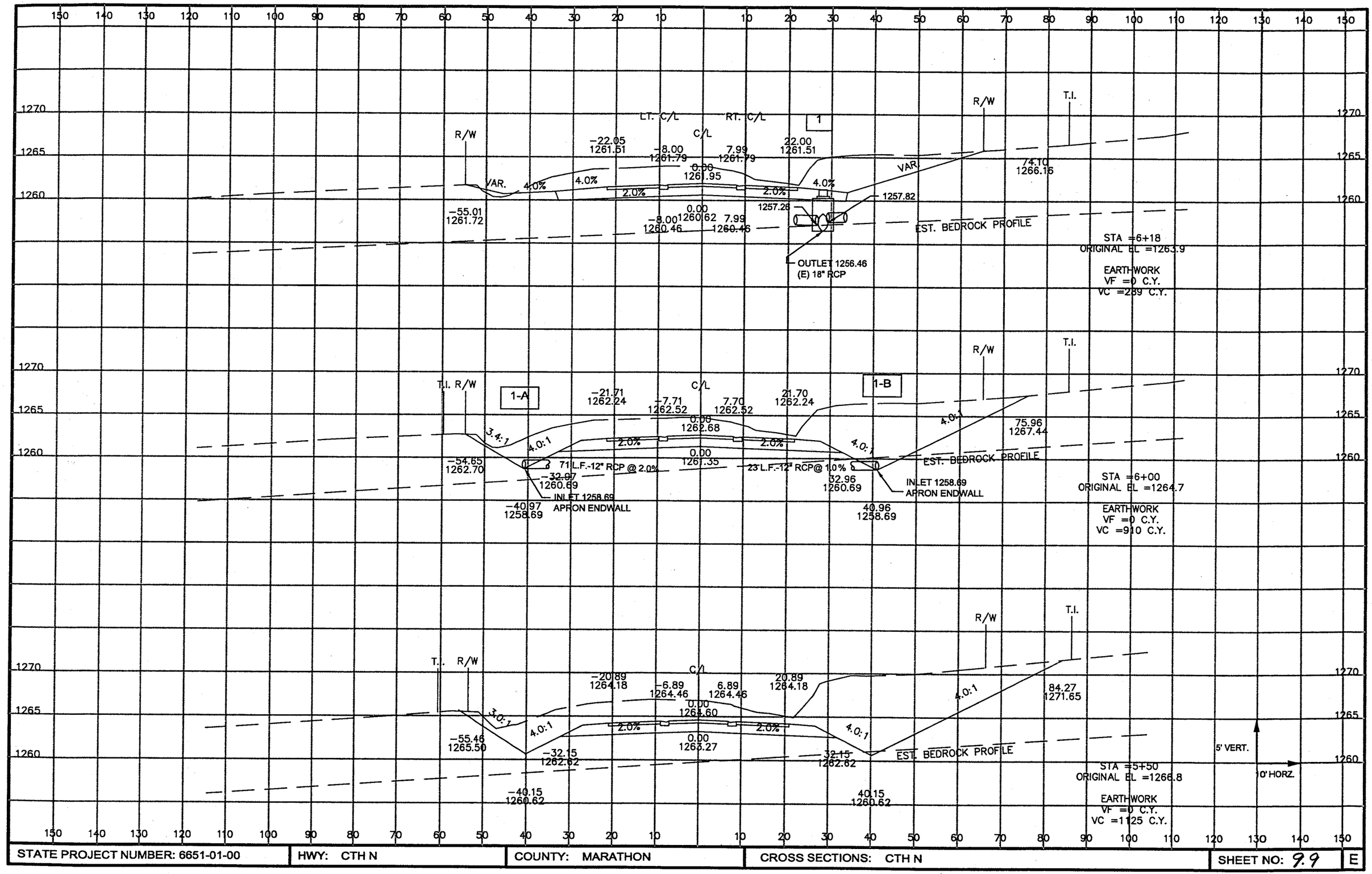

STATE PROJECT NUMBER: 6651-01-00	HWY: CTH N	COUNTY: MARATHON	CROSS SECTIONS: CTH N	SHEET NO: 9.9	E

P:\DRAFT\28940100 CTH N West Arterial\topo survey\rc006001.dwg, Layout1, 10/03/2003 01:47:11 PM

P:\DRAFT\28940100 CTH N West Arterial\topo survey\rc007001.dwg, Layout1, 10/03/2003 01:47:36 PM

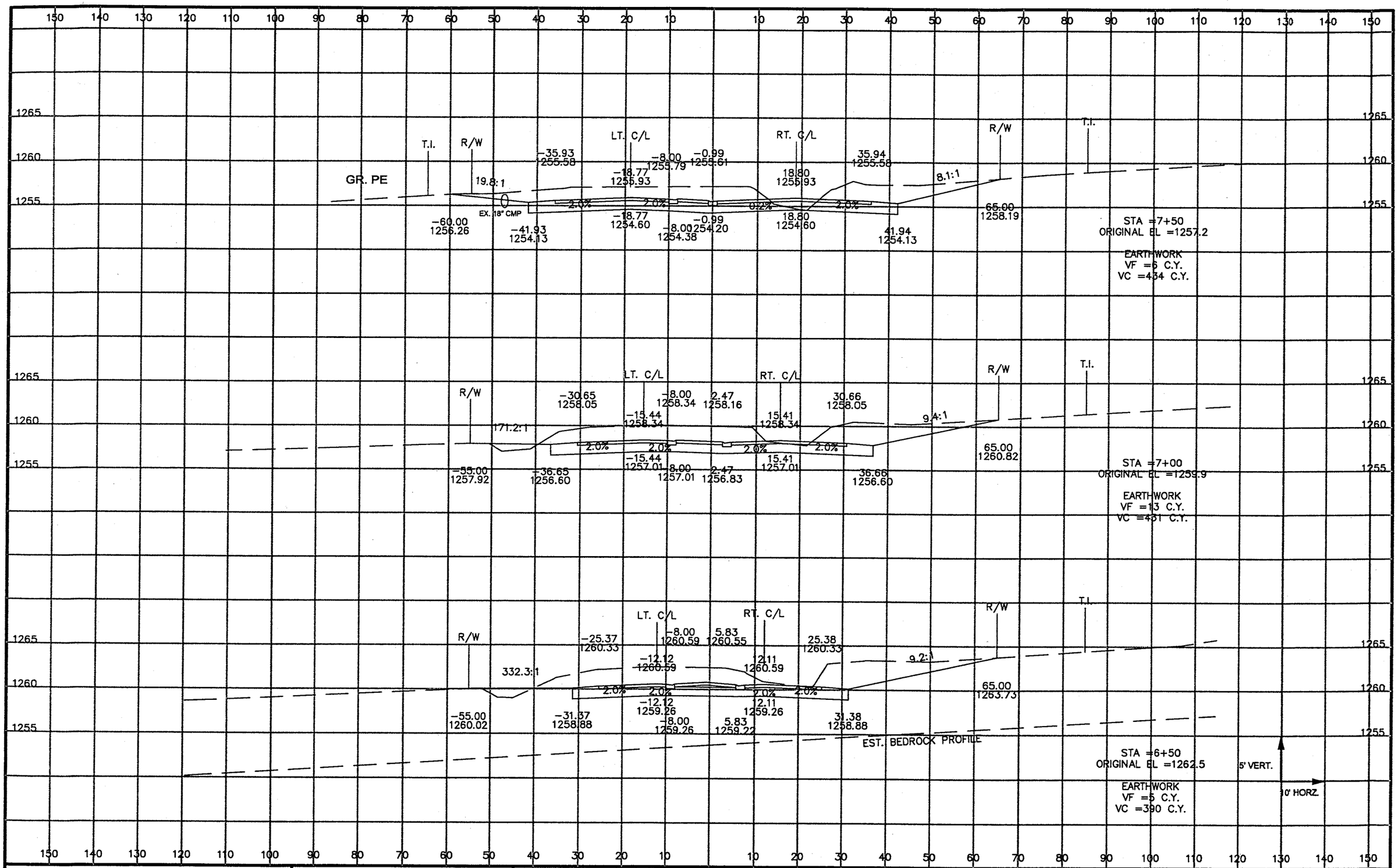

STATE PROJECT NUMBER: 6651-01-00	HWY: CTH N	COUNTY: MARATHON	CROSS SECTIONS: CTH N	SHEET NO: 9.10	E

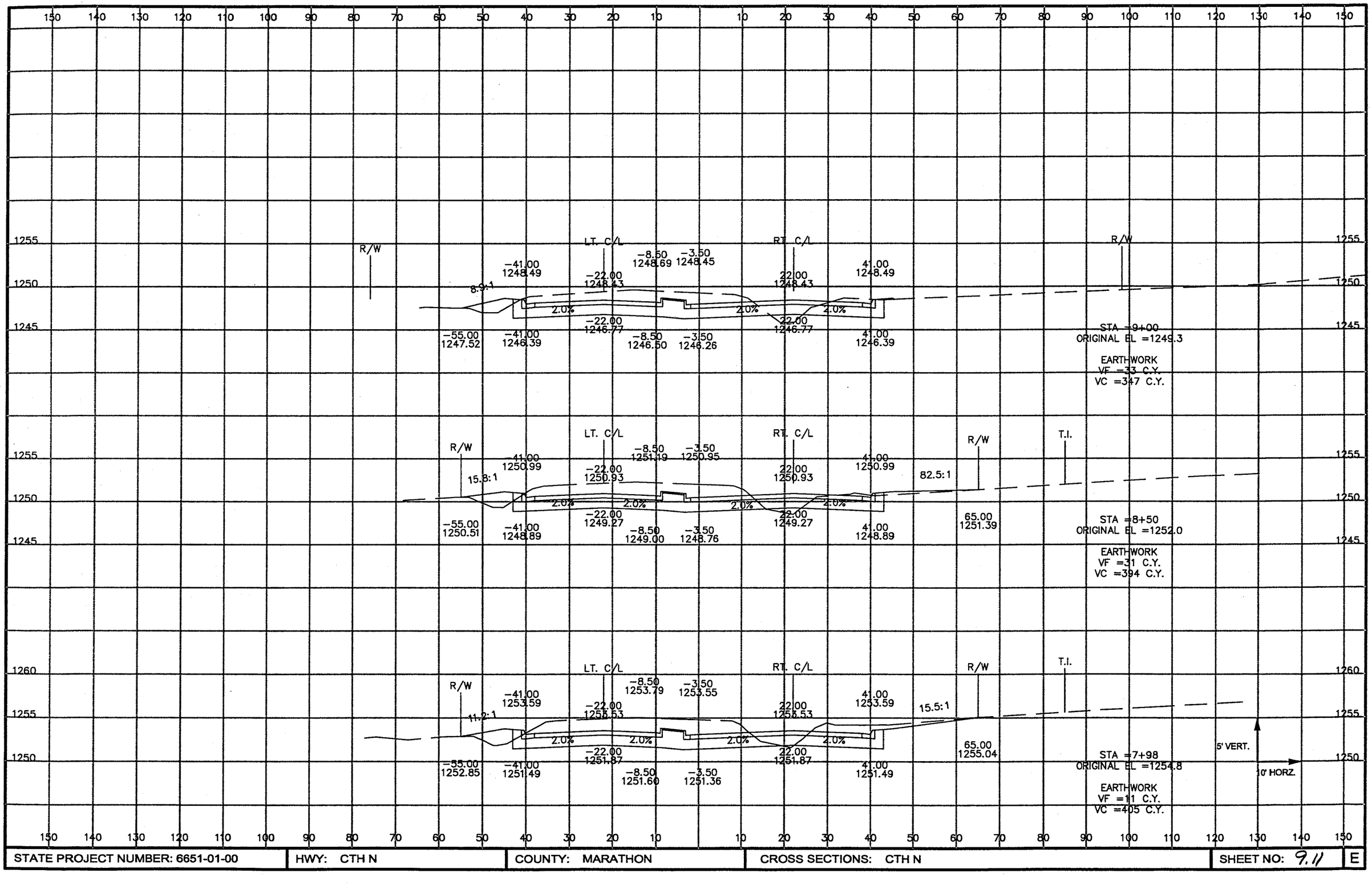

STATE PROJECT NUMBER: 6651-01-00	HWY: CTH N	COUNTY: MARATHON	CROSS SECTIONS: CTH N	SHEET NO: 9.11	E

P:\DRAFT\28940100 CTH N West Arterial\topo survey\rc008001.dwg, Layout1, 10/03/2003 01:48:01 PM

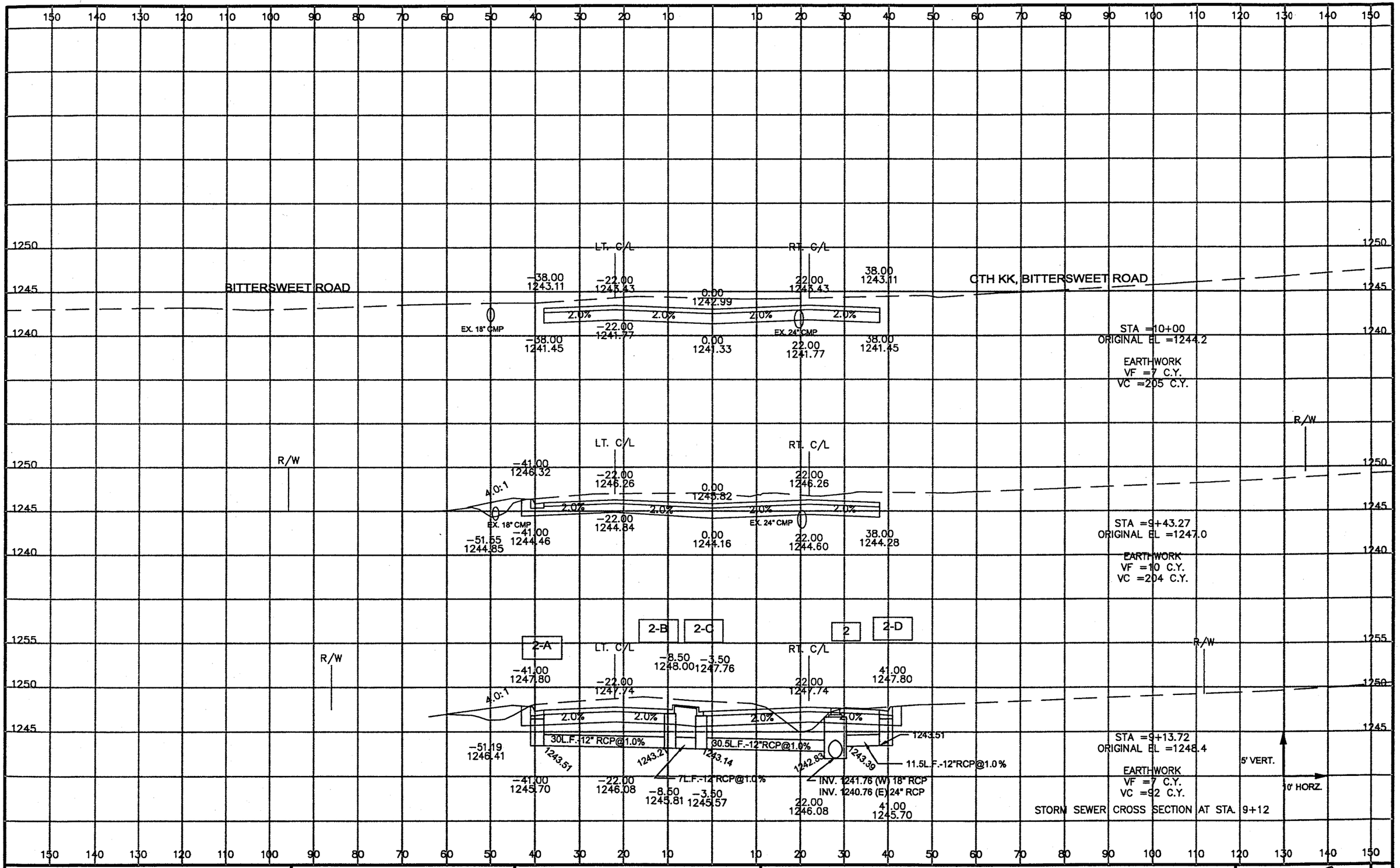

STATE PROJECT NUMBER: 6651-01-00	HWY: CTH N	COUNTY: MARATHON	CROSS SECTIONS: CTH N	SHEET NO: 9.12	E

P:\DRAFT\28940100 CTH N West Arterial\topo survey\rc009001.dwg, Layout1, 10/03/2003 01:50:21 PM

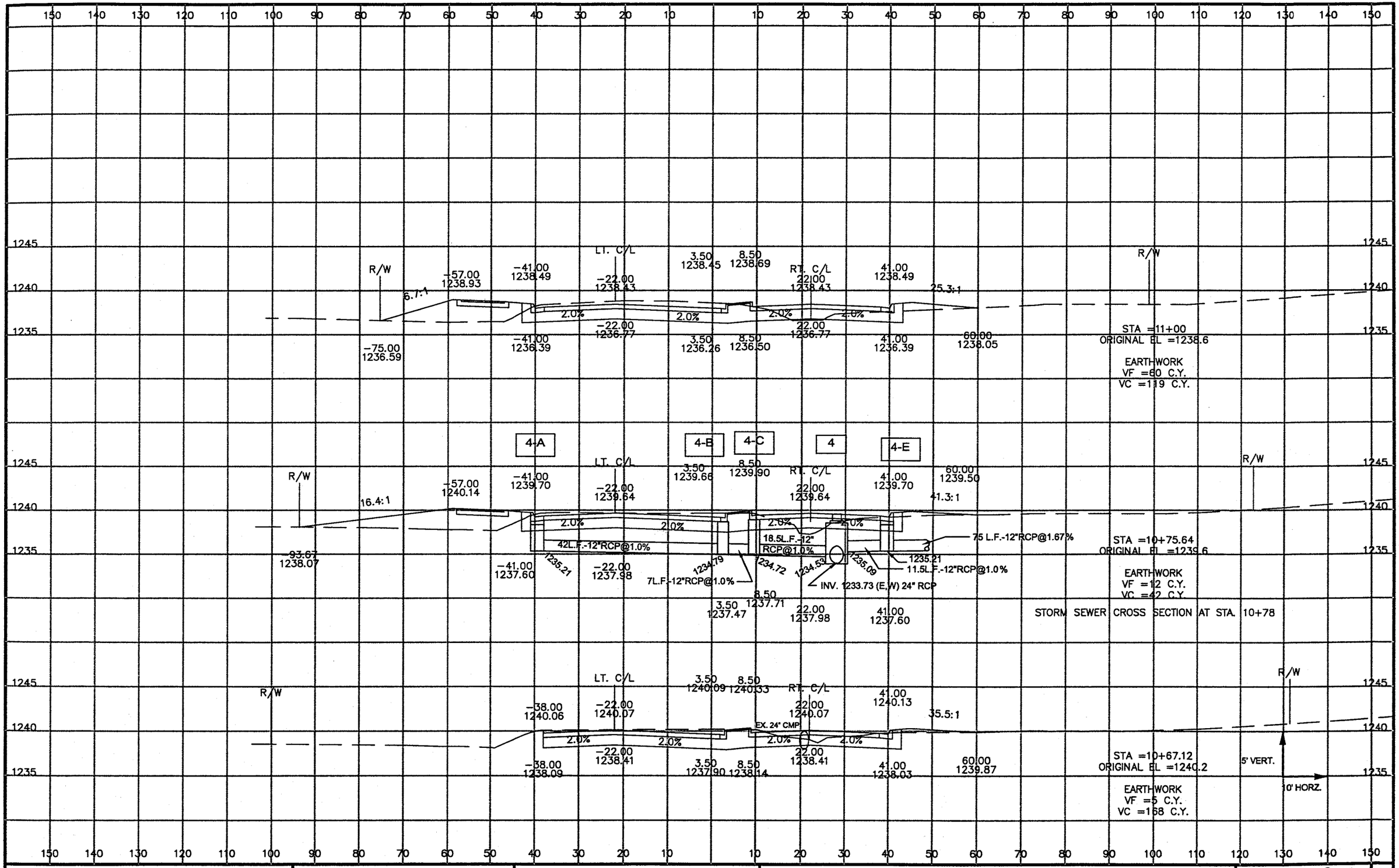

P:\DRAFT\28940100 CTH N West Arterial\topo survey\rc010001.dwg, Layout1, 10/03/2003 01:50:44 PM

STATE PROJECT NUMBER: 6651-01-00	HWY: CTH N	COUNTY: MARATHON	CROSS SECTIONS: CTH N	SHEET NO: 9.13	E

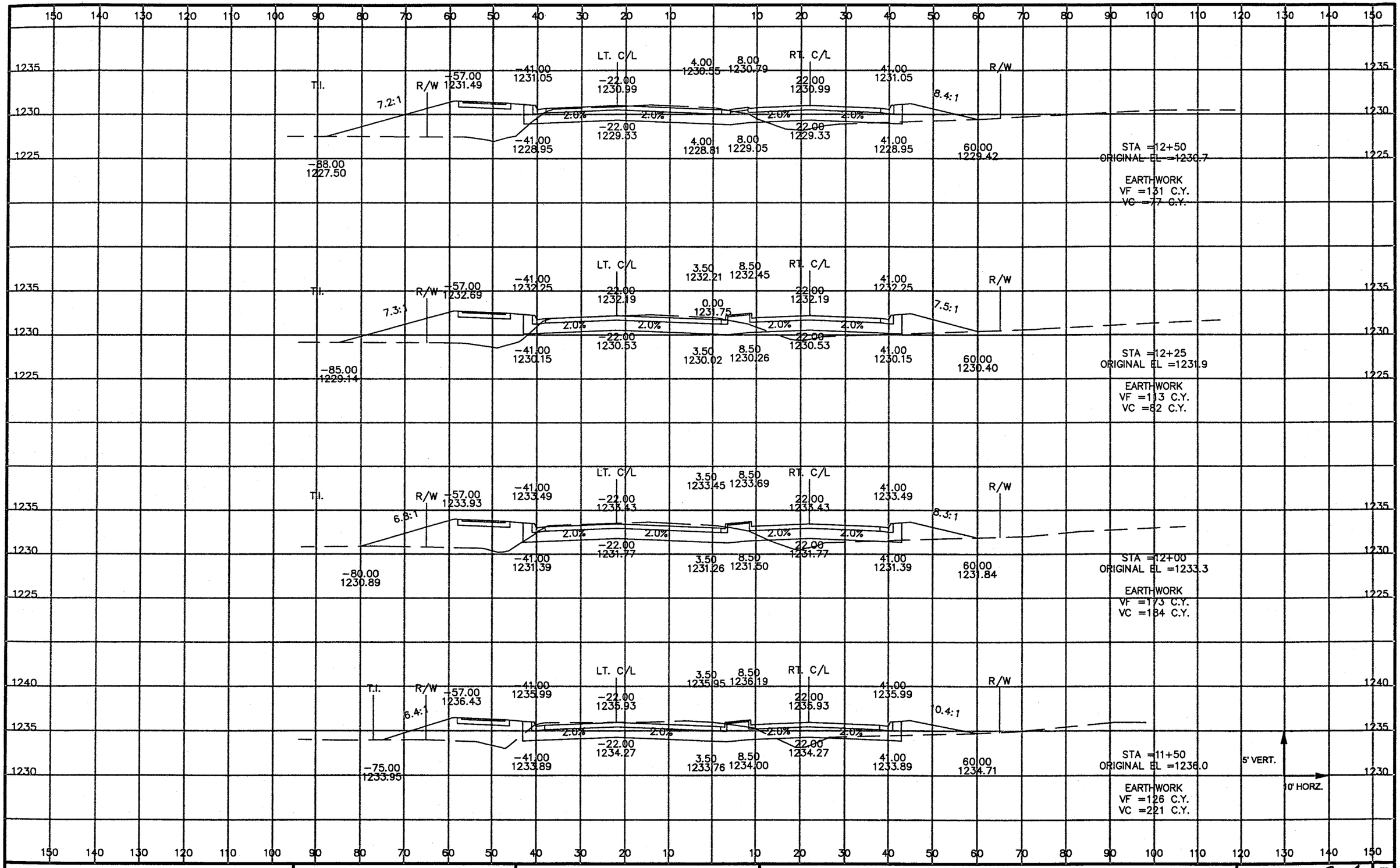

P:\DRAFT\28940100 CTH N West Arterial\topo survey\rc011001.dwg, Layout1, 10/03/2003 01:51:05 PM

STATE PROJECT NUMBER: 6651-01-00	HWY: CTH N	COUNTY: MARATHON	CROSS SECTIONS: CTH N	SHEET NO: 9.14	E

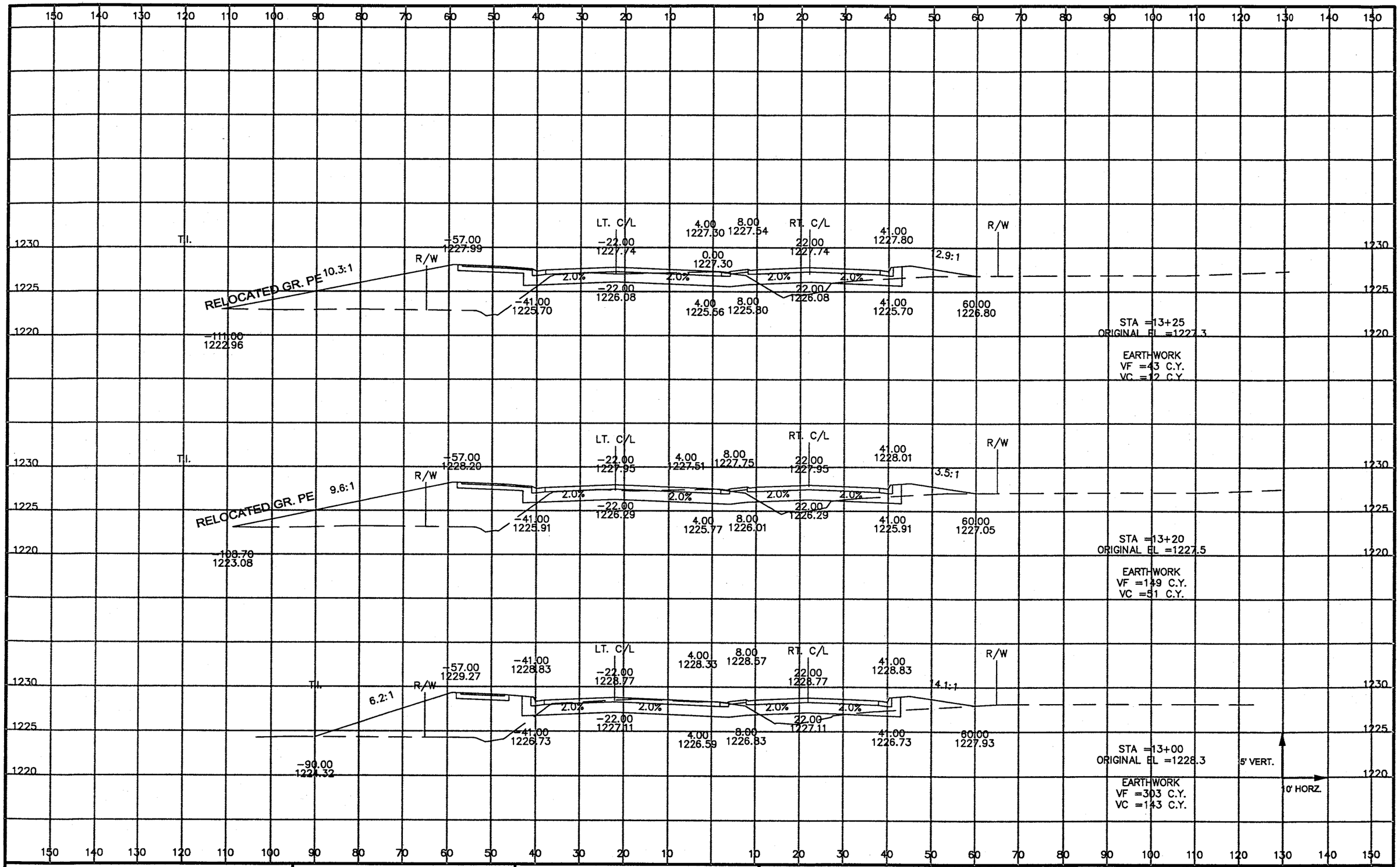

P:\DRAFT\28940100 CTH N West Arterial\topo survey\rc012001.dwg, Layout1, 10/03/2003 01:51:33 PM

STATE PROJECT NUMBER: 6651-01-00	HWY: CTH N	COUNTY: MARATHON	CROSS SECTIONS: CTH N	SHEET NO: 9.15	E

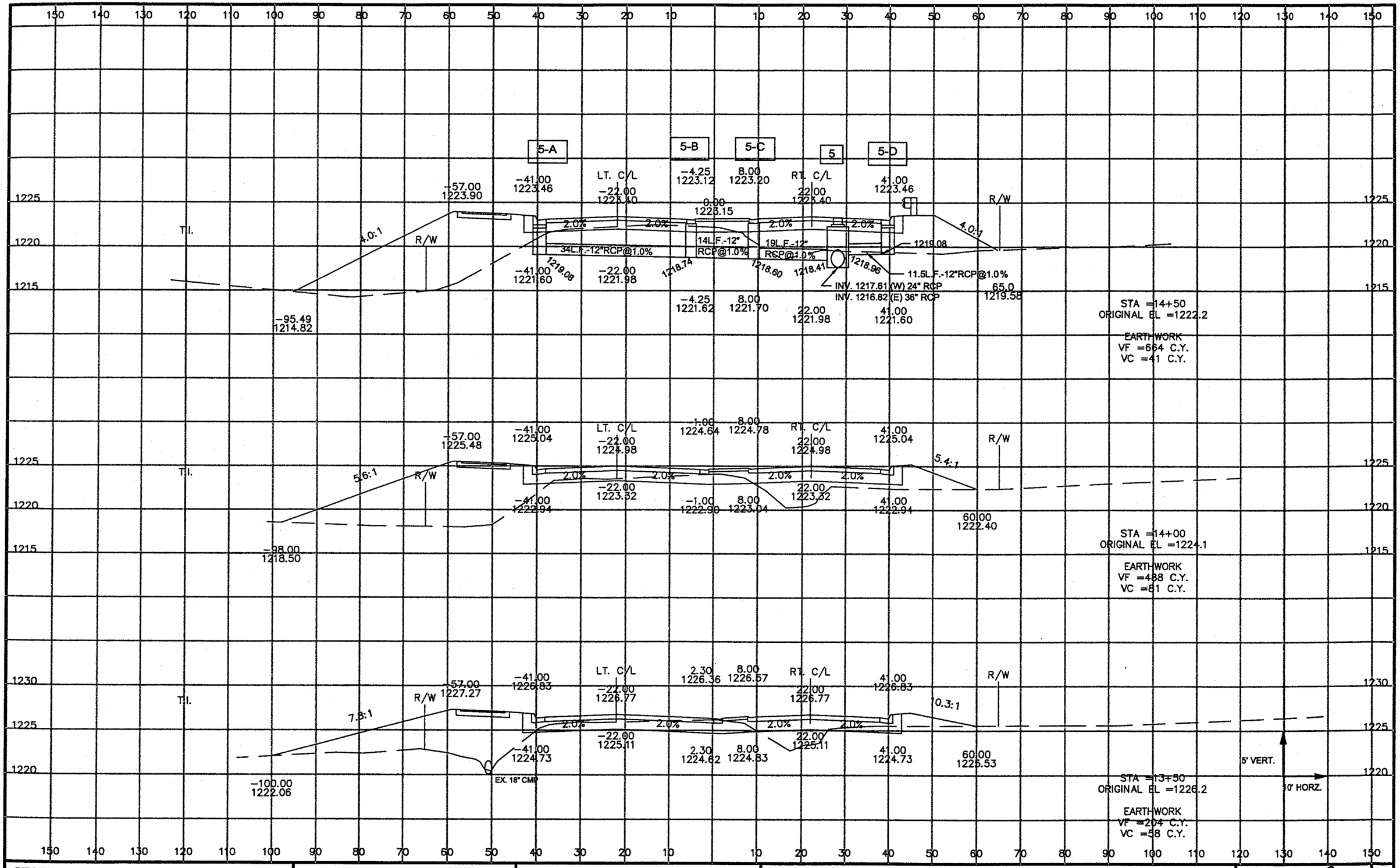

P:\DRAFT\28940100 CTH N West Arterial\topo survey\rc013001.dwg, Layout1, 10/03/2003 01:51:54 PM

STATE PROJECT NUMBER: 6651-01-00	HWY: CTH N	COUNTY: MARATHON	CROSS SECTIONS: CTH N	SHEET NO: 9.16	E

P:\DRAFT\289400100 CTH N West Arterial\topo survey\rc014001.dwg, Layout1, 10/03/2003 01:52:14 PM

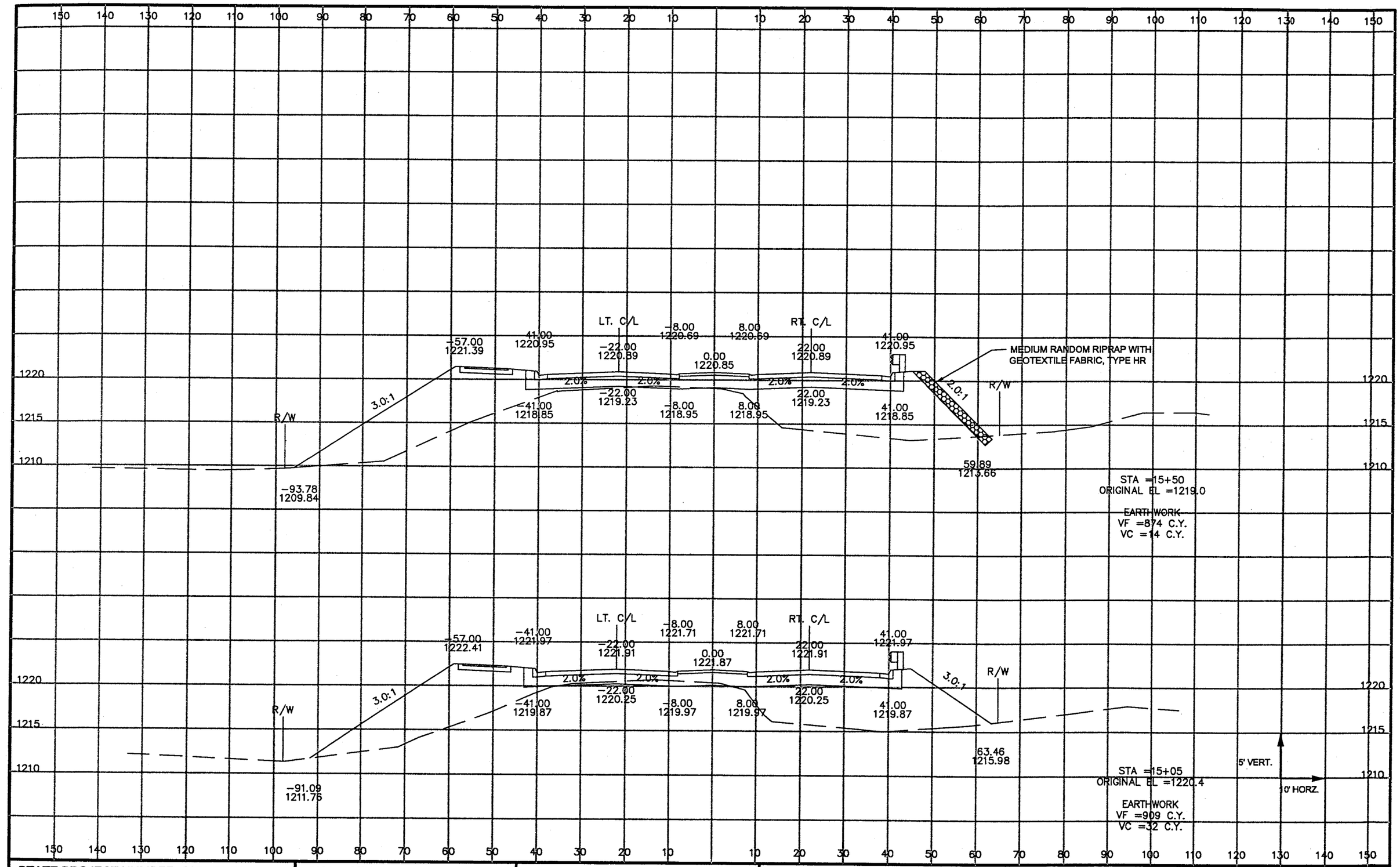

STATE PROJECT NUMBER: 6651-01-00	HWY: CTH N	COUNTY: MARATHON	CROSS SECTIONS: CTH N	SHEET NO: 9.17	E

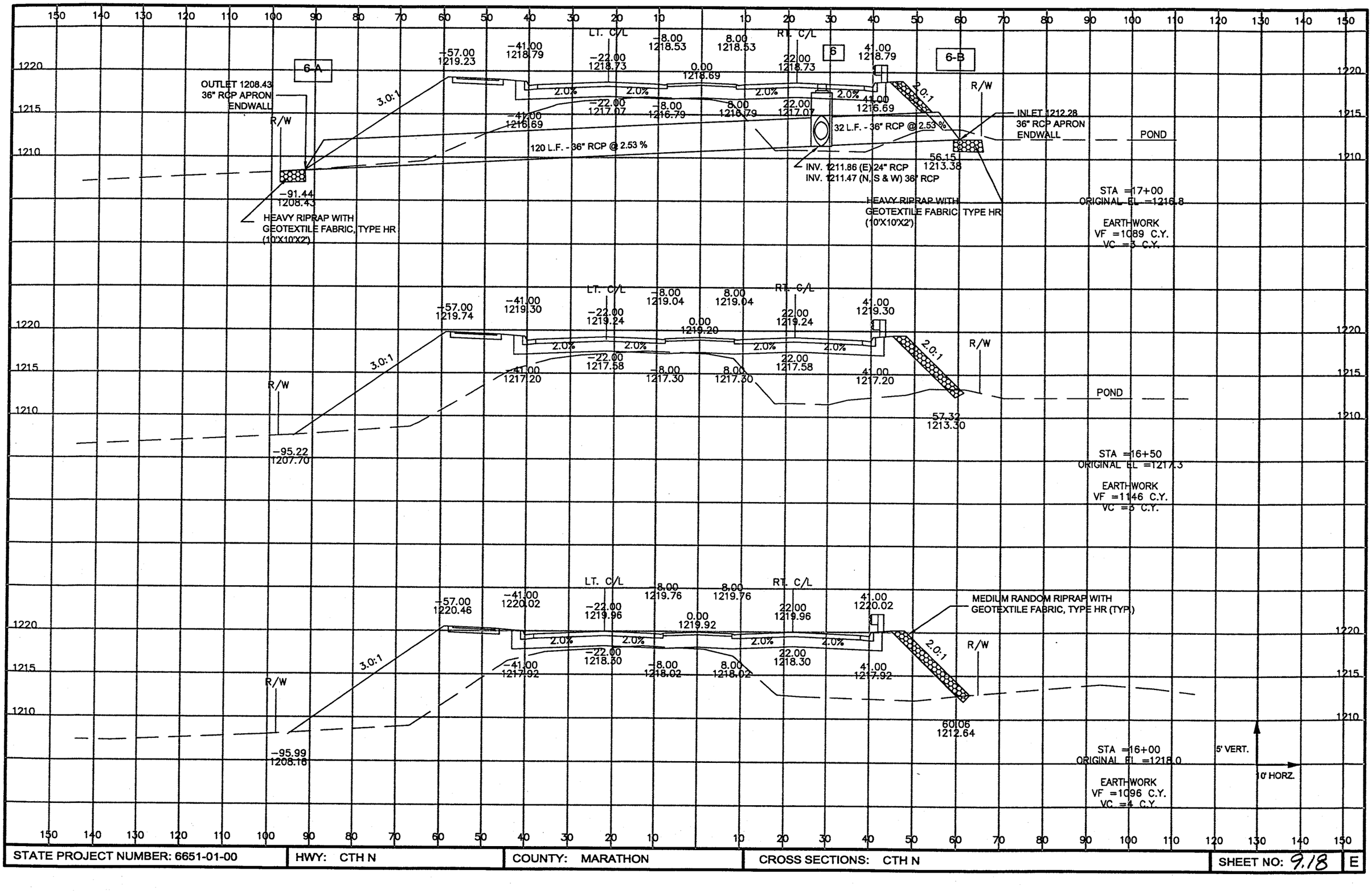

STATE PROJECT NUMBER: 6651-01-00	HWY: CTH N	COUNTY: MARATHON	CROSS SECTIONS: CTH N	SHEET NO: 9.18	E

P:\DRAFT\28940100 CTH N West Arterial\topo survey\rc015001.dwg, Layout1, 10/03/2003 01:52:34 PM

P:\DRAFT\28940100 CTH N West Arterial\topo survey\rc016001.dwg, Layout1, 10/06/2003 01:17:13 PM

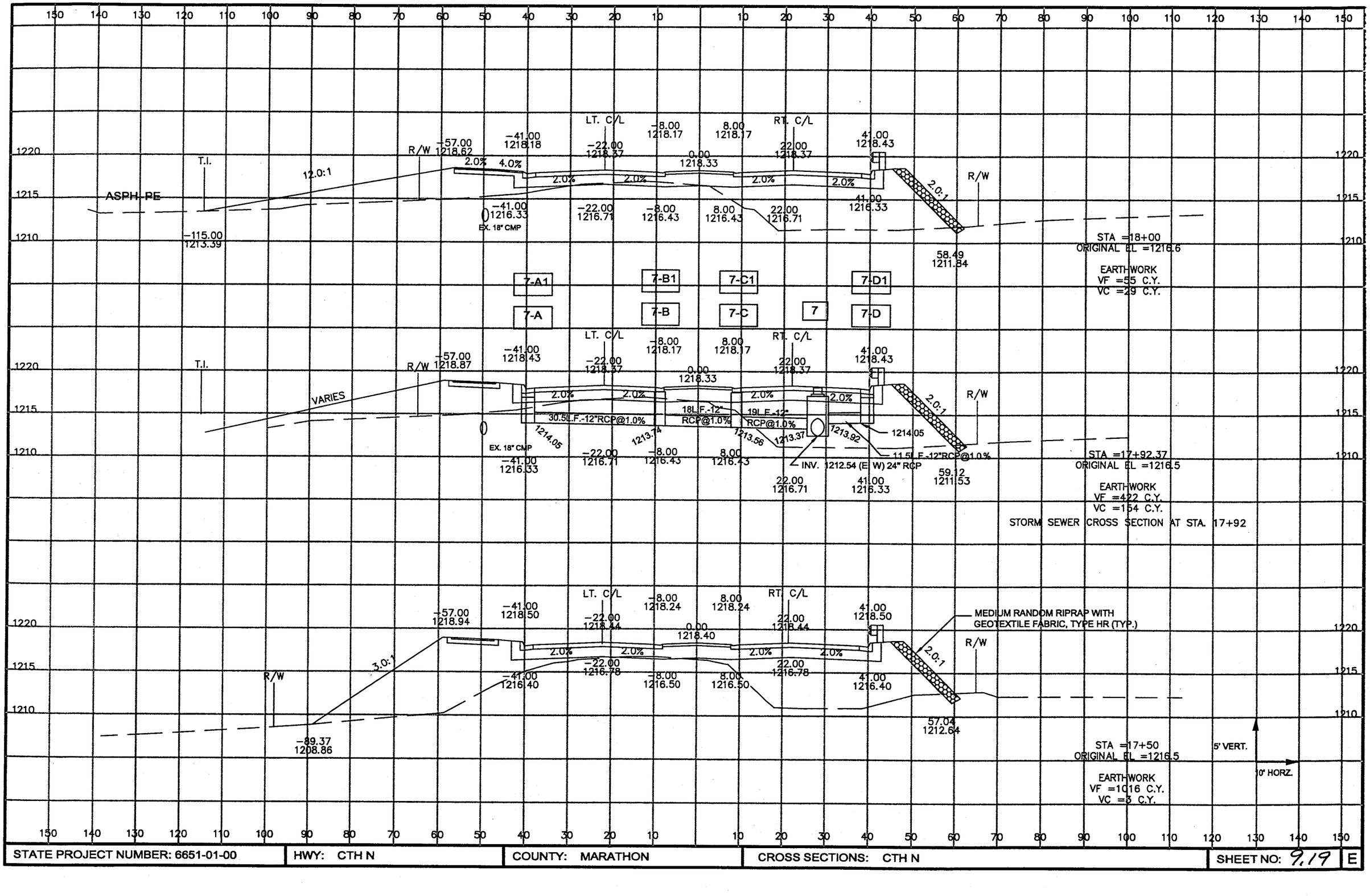

STATE PROJECT NUMBER: 6651-01-00	HWY: CTH N	COUNTY: MARATHON	CROSS SECTIONS: CTH N	SHEET NO: 9.19	E

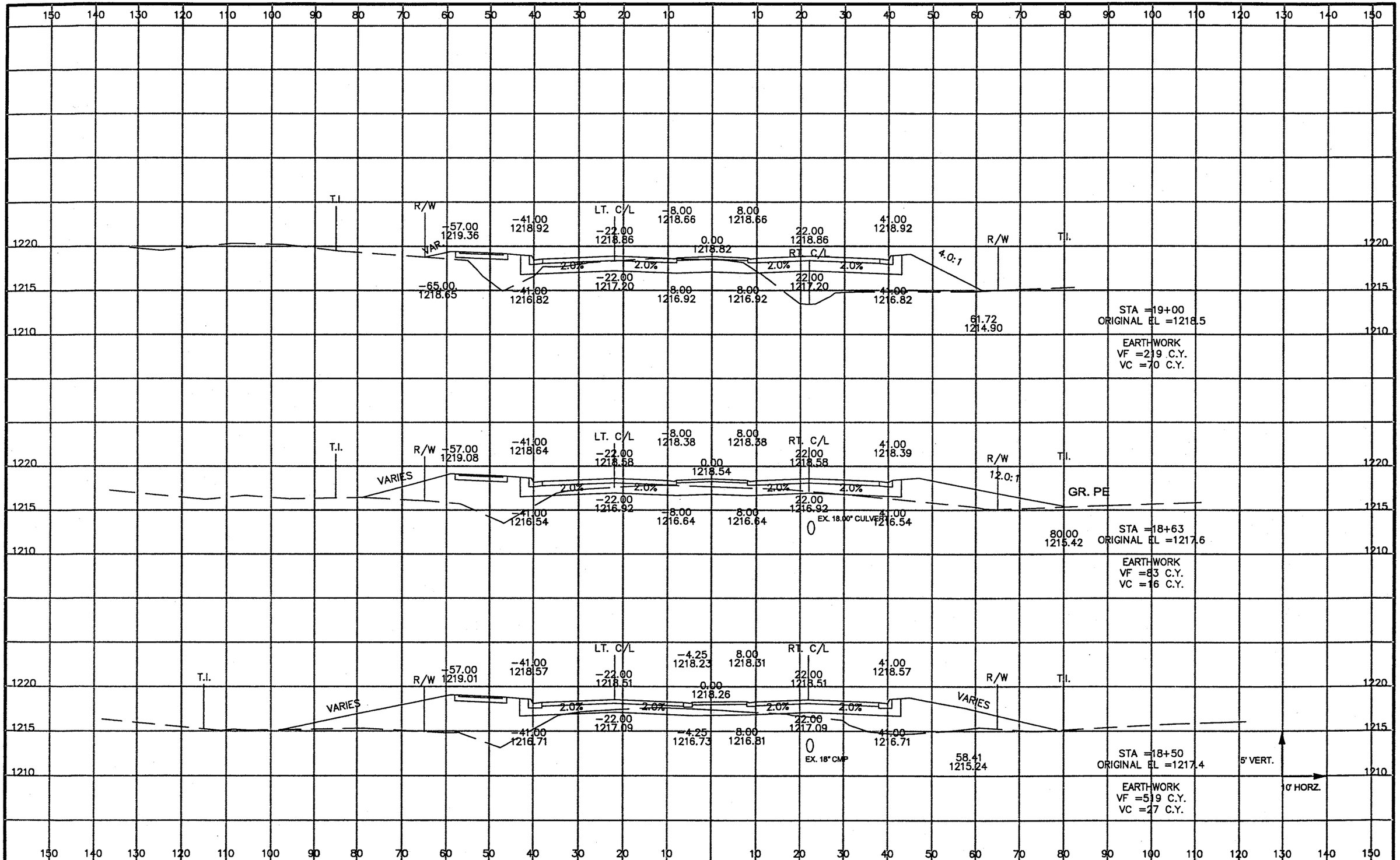

STATE PROJECT NUMBER: 6651-01-00	HWY: CTH N	COUNTY: MARATHON	CROSS SECTIONS: CTH N	SHEET NO: 9.20	E

P:\DRAFT\28940100 CTH N West Arterial\topo survey\rc017001.dwg, Layout1, 10/03/2003 01:56:27 PM

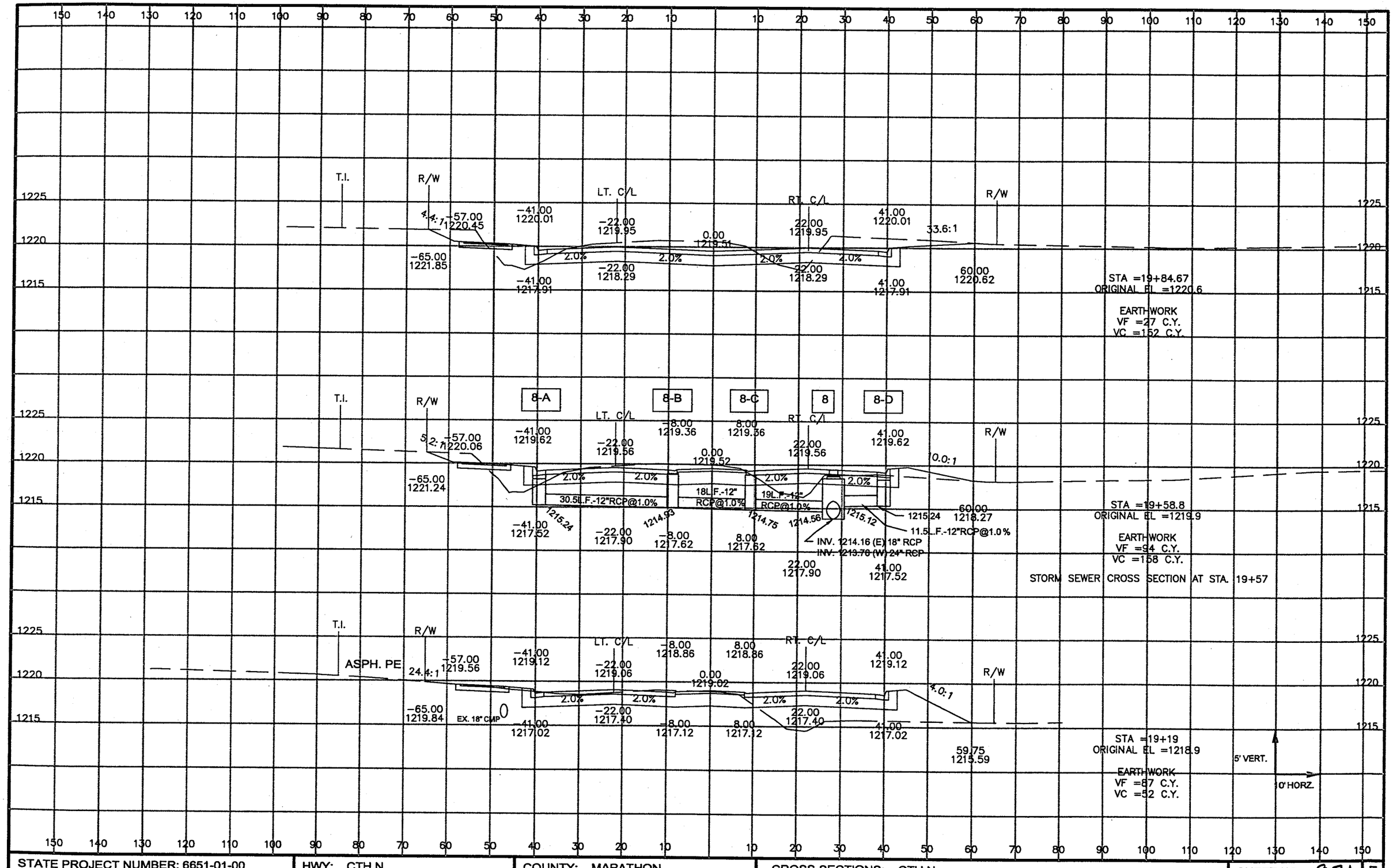

STATE PROJECT NUMBER: 6651-01-00	HWY: CTH N	COUNTY: MARATHON	CROSS SECTIONS: CTH N	SHEET NO: 9.21	E

P:\DRAFT\28940100 CTH N West Arterial\topo survey\rc018001.dwg, Layout1, 10/03/2003 01:56:40 PM

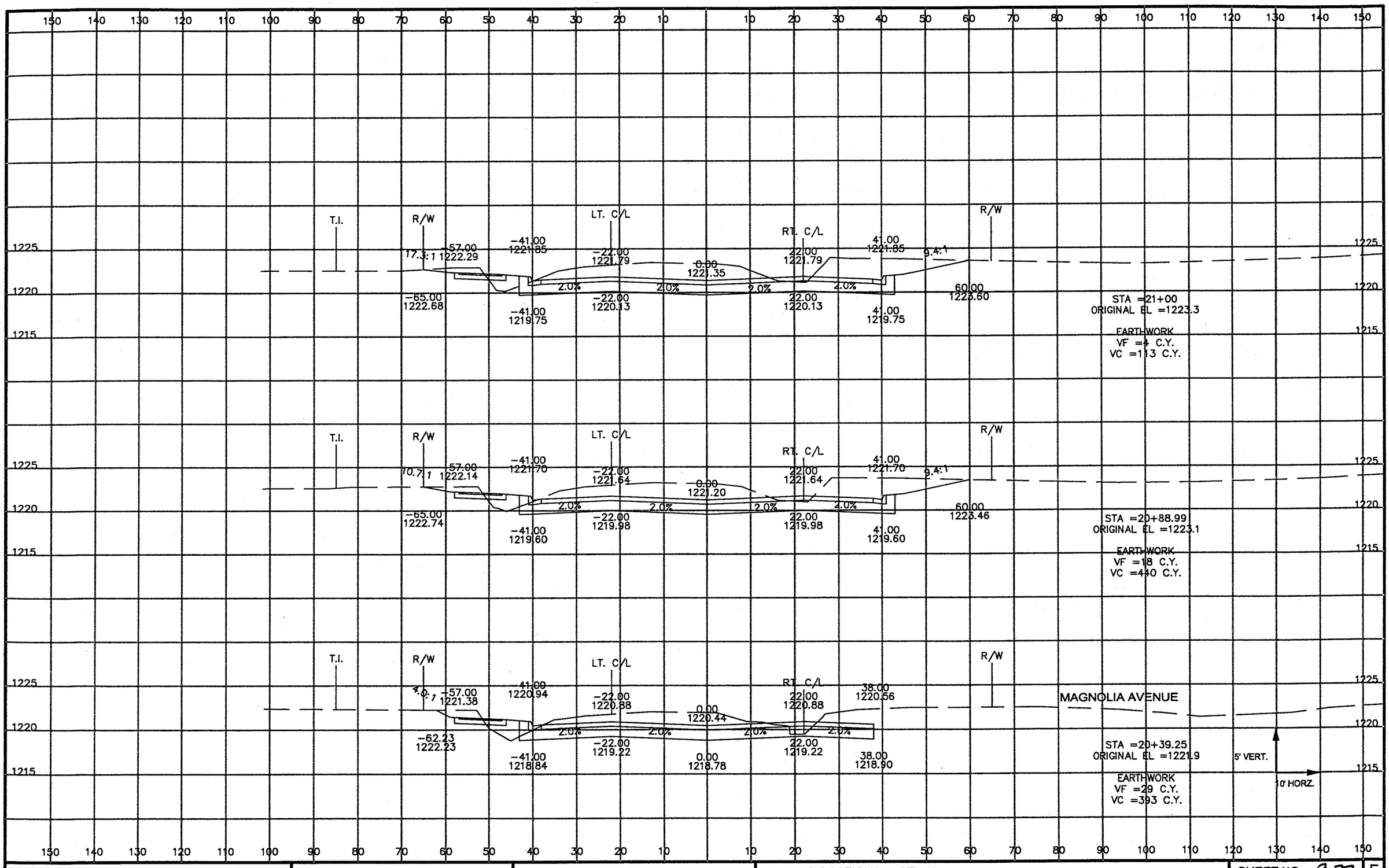

P:\DRAFT\28940100 CTH N West Arterial\topo survey\rc019001.dwg, Layout1, 10/03/2003 01:57:13 PM

STATE PROJECT NUMBER: 6651-01-00	HWY: CTH N	COUNTY: MARATHON	CROSS SECTIONS: CTH N	SHEET NO: 9.22 E

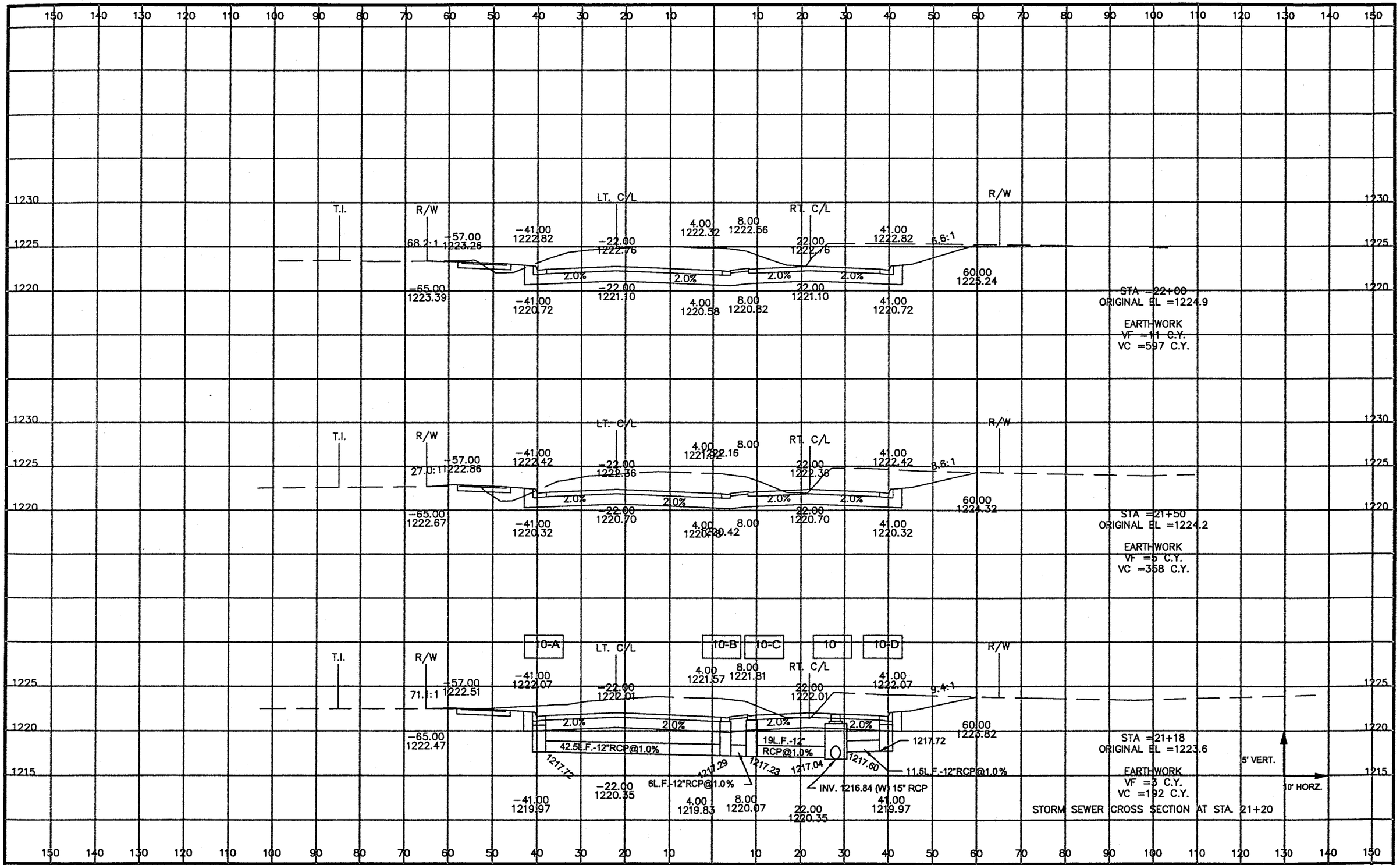

STATE PROJECT NUMBER: 6651-01-00	HWY: CTH N	COUNTY: MARATHON	CROSS SECTIONS: CTH N	SHEET NO: 9.23	E

P:\DRAFT\28940100 CTH N West Arterial\topo survey\rc020001.dwg, Layout1, 10/03/2003 01:57:32 PM

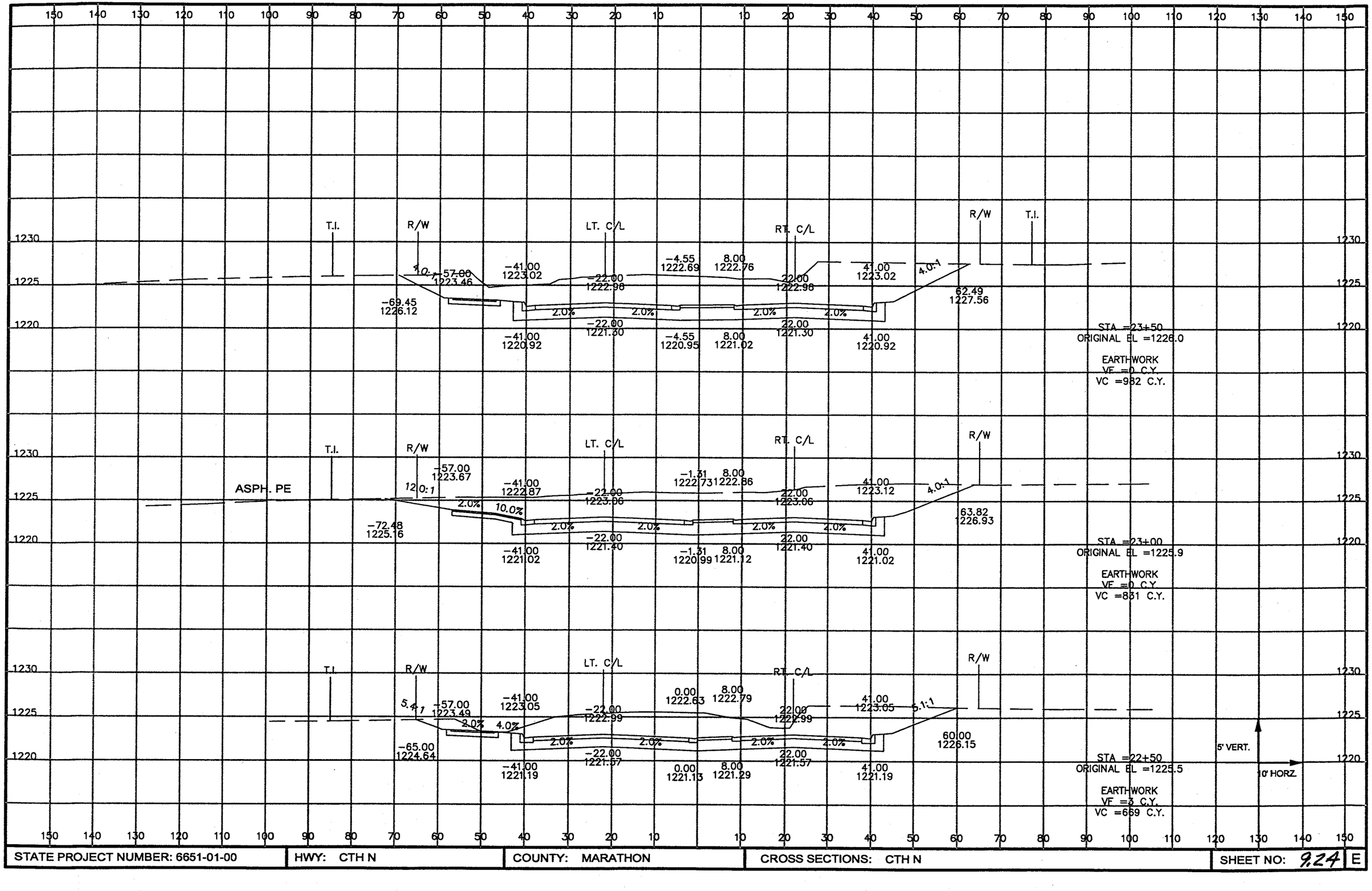

STATE PROJECT NUMBER: 6651-01-00	HWY: CTH N	COUNTY: MARATHON	CROSS SECTIONS: CTH N	SHEET NO: 9.24	E

P:\DRAFT\28940100 CTH N West Arterial\topo survey\rc021001.dwg, Layout1, 10/03/2003 01:57:48 PM

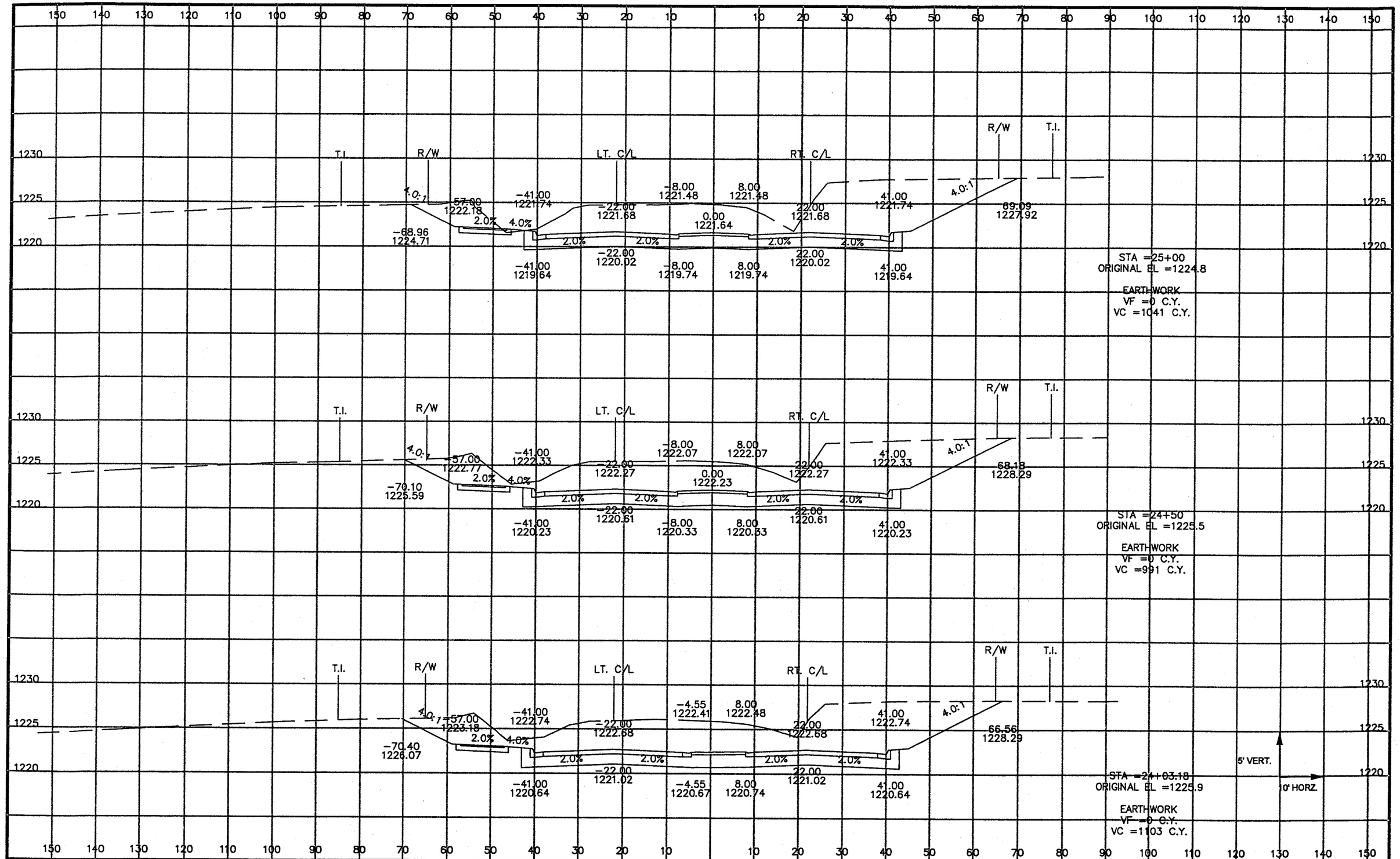

STATE PROJECT NUMBER: 6651-01-00	HWY: CTH N	COUNTY: MARATHON	CROSS SECTIONS: CTH N	SHEET NO: 9.25	E

P:\DRAFT\28940100 CTH N West Arterial\topo survey\rc022001.dwg, Layout1, 10/03/2003 01:58:05 PM

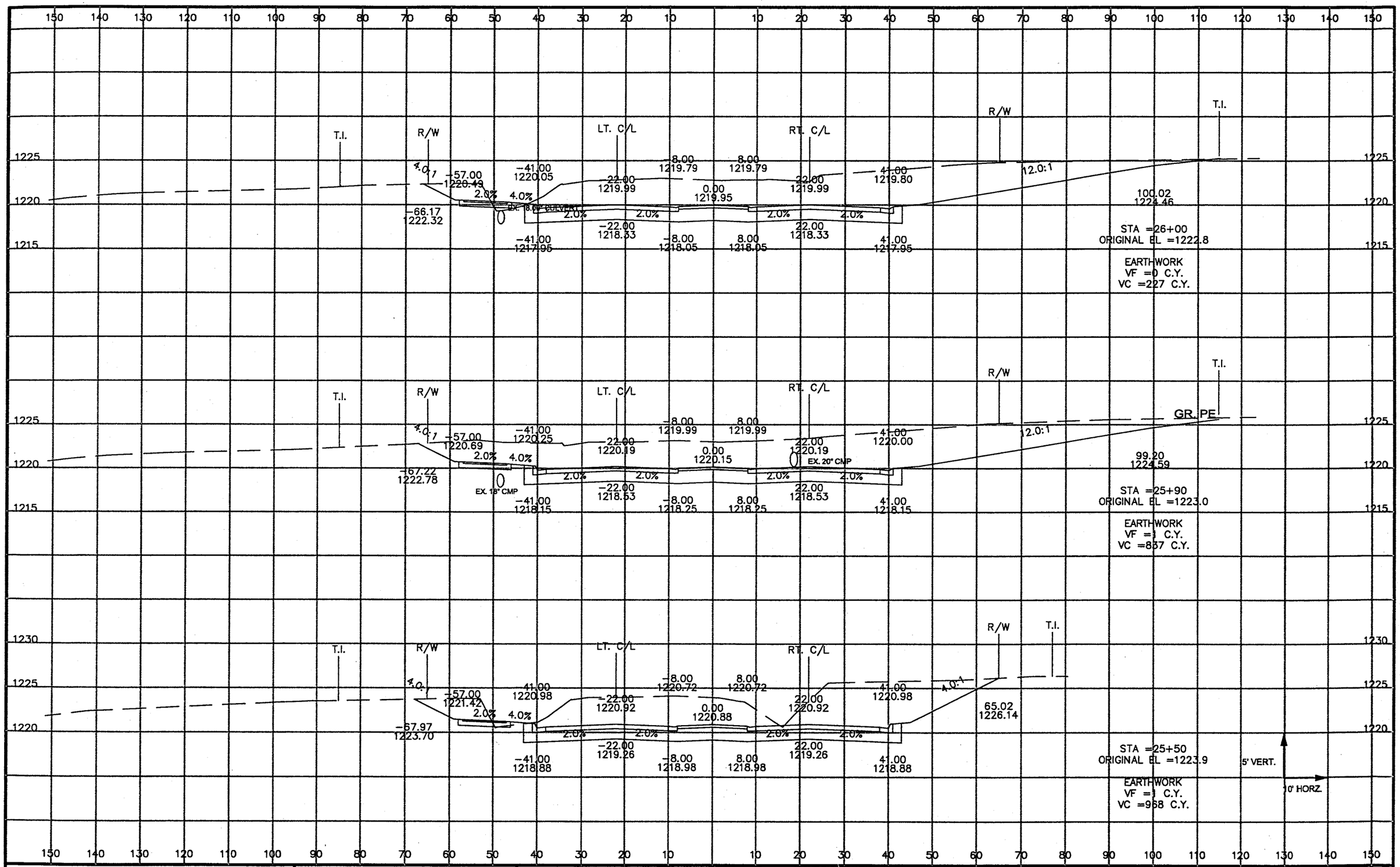

P:\DRAFT\28940100 CTH N West Arterial\topo survey\rc023001.dwg, Layout1, 10/03/2003 02:00:23 PM

STATE PROJECT NUMBER: 6651-01-00	HWY: CTH N	COUNTY: MARATHON	CROSS SECTIONS: CTH N	SHEET NO: 9.26	E

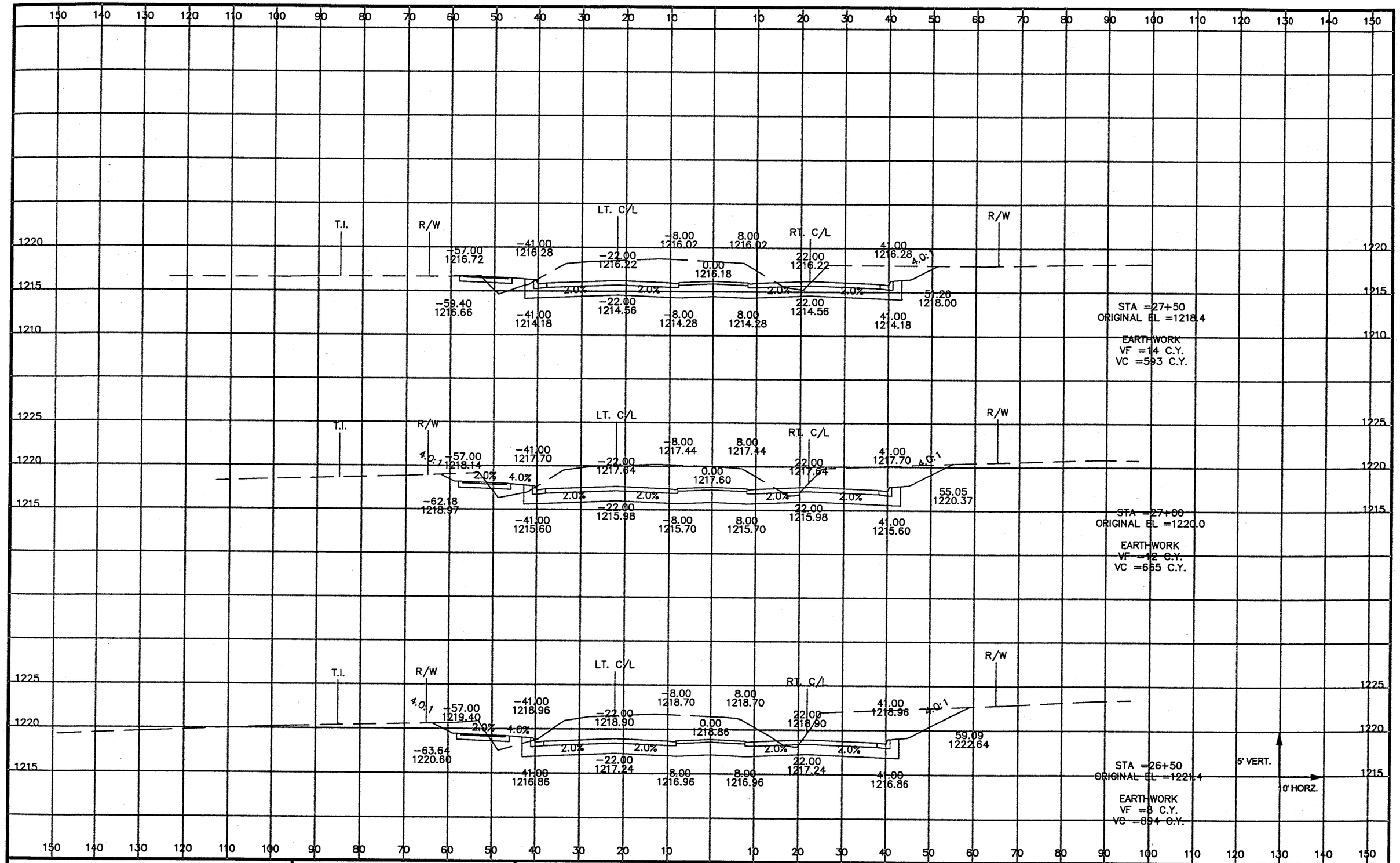

STATE PROJECT NUMBER: 6651-01-00	HWY: CTH N	COUNTY: MARATHON	CROSS SECTIONS: CTH N	SHEET NO: 9.27	E

P:\DRAFT\28940100 CTH N West Arterial\topo survey\rc024001.dwg, Layout1, 10/03/2003 02:00:38 PM

P:\DRAFT\28940100 CTH N West Arterial\topo survey\rc025001.dwg, Layout1, 10/03/2003 02:00:55 PM

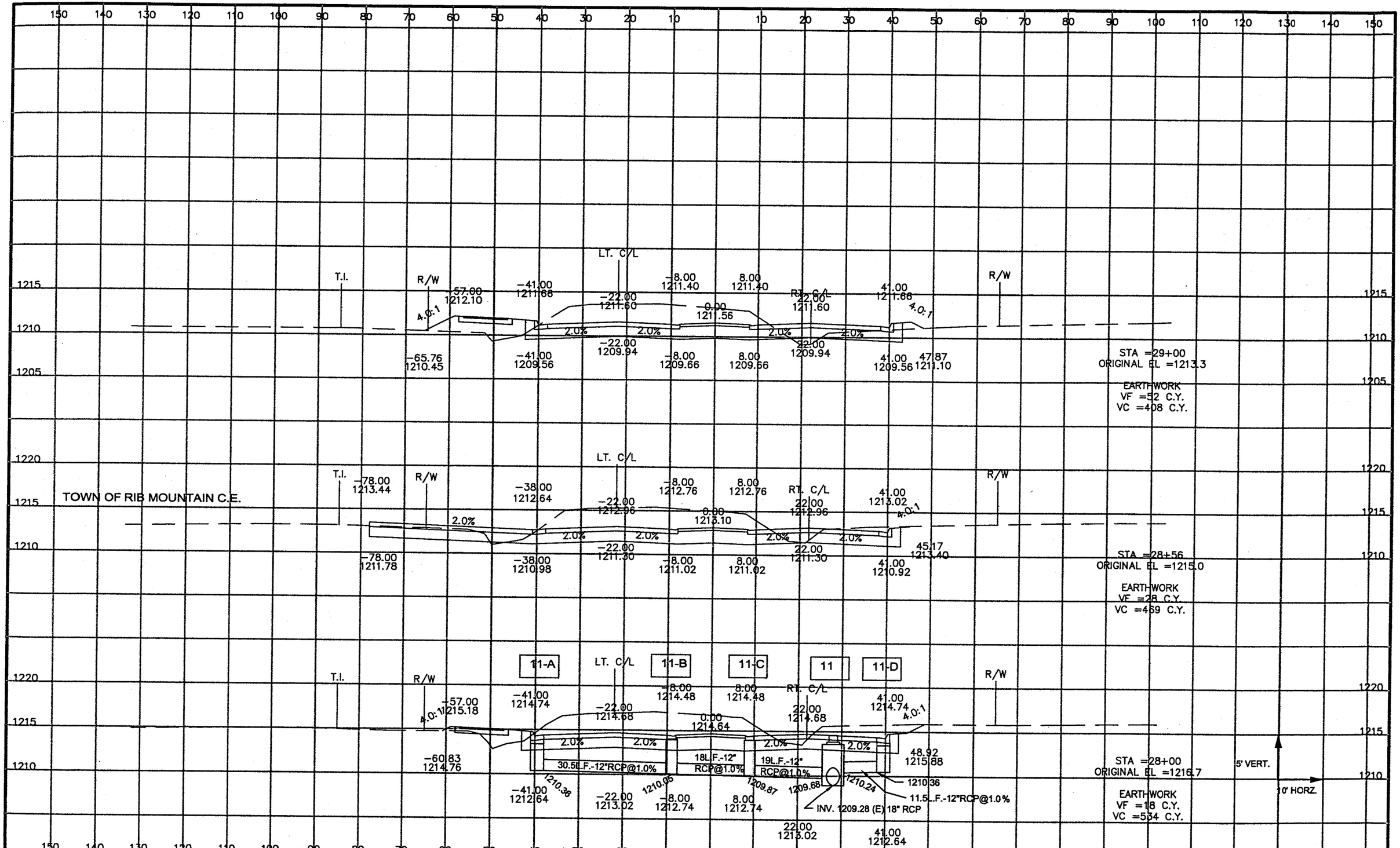

STATE PROJECT NUMBER: 6651-01-00	HWY: CTH N	COUNTY: MARATHON	CROSS SECTIONS: CTH N	SHEET NO: 9.28	E

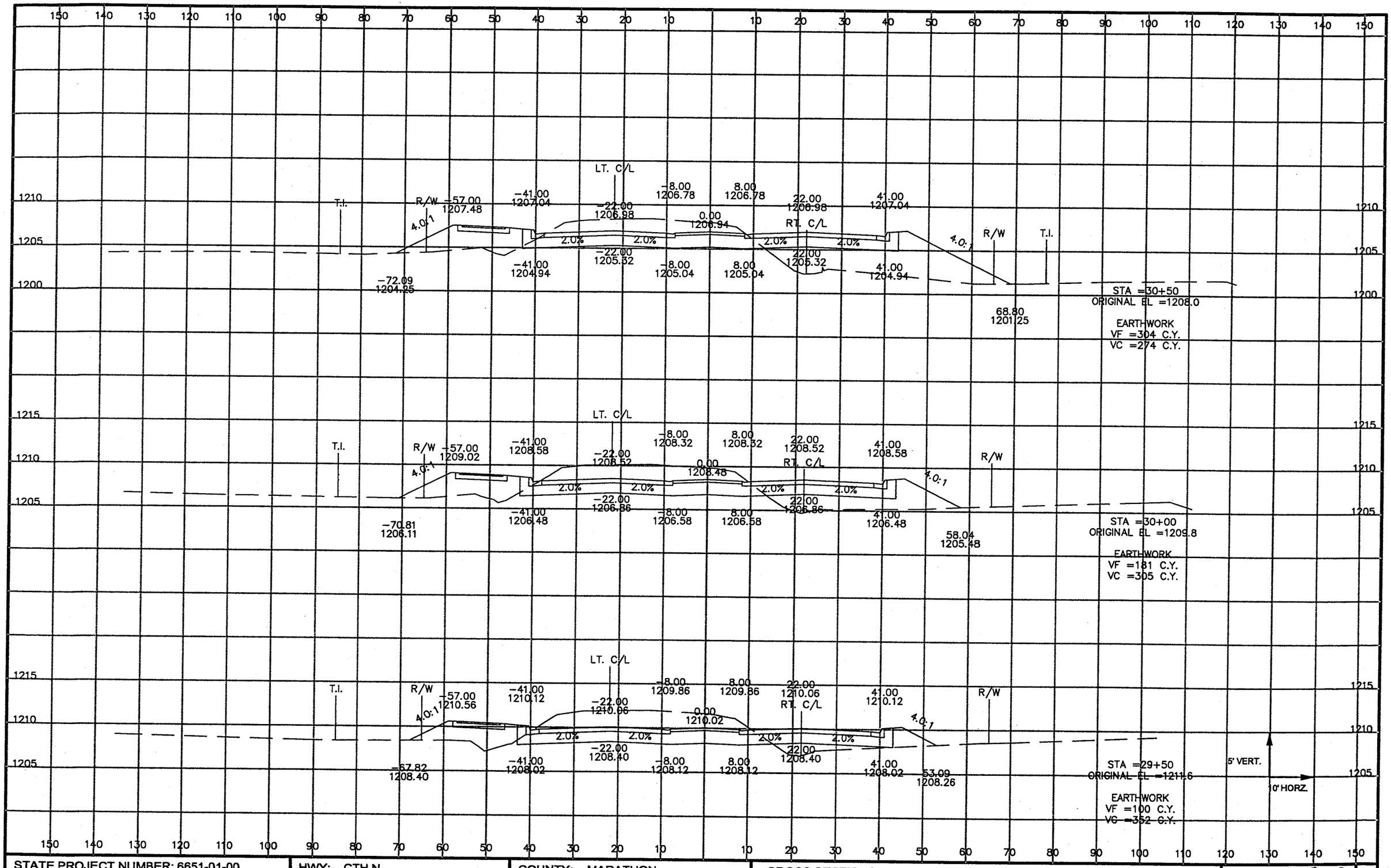

P:\DRAFT\28940100 CTH N West Arterial\topo survey\vc026001.dwg, Layout1, 10/03/2003 02:01:11 PM

STATE PROJECT NUMBER: 6651-01-00	HWY: CTH N	COUNTY: MARATHON	CROSS SECTIONS: CTH N	SHEET NO: 9.29	E

P:\DRAFT\2894\0100 CTH N West Arterial\topo survey\vc02\001.dwg, Layout1, 2/12/2004 9:25:18 AM, \\CWEIa_ji8000

150 140 130 120 110 100 90 80 70 60 50 40 30 20 10 10 20 30 40 50 60 70 80 90 100 110 120 130 140 150

1205
1200
1195

R/W
T.I.
4.0:1
-57.00
1203.10
-41.00
1202.66
LT. C/L
-22.00
1202.60
-8.00
1202.40
8.00
1202.40
RT. C/L
22.00
1202.60
41.00
1202.66
0.00
1202.56
2.0%
2.0%
2.0%
2.0%
EX. 72" CATTLE PASS CMP
-75.27
1199.08
-41.00
1200.56
-22.00
1200.94
-8.00
1200.66
8.00
1200.66
22.00
1200.94
41.00
1200.56
R/W
PLE
T.I.
4.0:1
75.72
1195.14
STA =32+00
ORIGINAL EL =1202.8
EST. MARSH DEPOSIT PROFILE

EARTHWORK
VF =726 C.Y.
VC =184 C.Y.

1205
1200
1195

T.I.
R/W
4.0:1
-57.00
1204.46
-41.00
1204.02
LT. C/L
-22.00
1203.96
-8.00
1203.76
8.00
1203.76
RT. C/L
22.00
1203.96
41.00
1204.02
0.00
1203.92
2.0%
2.0%
2.0%
2.0%
-73.46
1200.89
-41.00
1201.92
-22.00
1202.30
-8.00
1202.02
8.00
1202.02
22.00
1202.30
41.00
1201.92
4.0:1
R/W
T.I.
74.75
1196.74
STA =31+50
ORIGINAL EL =1204.5

EARTHWORK
VF =508 C.Y.
VC =217 C.Y.

12-A1 12-B1 12-C1 12-D1
12-A 12-B 12-C 12 12-D

1210
1205
1200

T.I.
R/W
4.0:1
-57.00
1205.94
-41.00
1205.50
LT. C/L
-22.00
1205.44
-8.00
1205.24
8.00
1205.24
RT. C/L
22.00
1205.44
41.00
1205.50
0.00
1205.40
2.0%
2.0%
2.0%
2.0%
11.5L.F.-24"RCP@3.45%
30.5L.F.-12"RCP@1.0%
18L.F.-12"
RCP@1.0%
19L.F.-12"
RCP@1.0%
-72.10
1202.70
1201.29
1200.99
1200.81
1200.62
-41.00
1203.40
-22.00
1203.78
-8.00
1203.50
8.00
1203.50
22.00
1203.78
41.00
1203.40
1199.42
INV. 1200.22 (W) 18" RCP
INV. 1199.82 (S) 24" RCP
36.5L.F.-24"RCP@3.45%
12-E
R/W
4.0:1
T.I.
INV. 1198.16
24" RCP APRON ENDWALL
HEAVY RIPRAP WITH
GEOTEXTILE FABRIC, TYPE HR
(10'X25'X2')
5' VERT.
10' HORZ.
73.99
1198.41
STA =31+00
ORIGINAL EL =1206.2

EARTHWORK
VF =418 C.Y.
VC =247 C.Y.

150 140 130 120 110 100 90 80 70 60 50 40 30 20 10 10 20 30 40 50 60 70 80 90 100 110 120 130 140 150

STATE PROJECT NUMBER: 6651-01-00	HWY: CTH N	COUNTY: MARATHON	CROSS SECTIONS: CTH N	SHEET NO: 9.30	E

P:\DRAFT\28940100 CTH N West Arterial\topo survey\rc028001.dwg, Layout1, 10/21/2003 04:36:42 PM

RETAINING WALL
-60.00 1199.81
-57.00 1199.75
-41.00 1199.31
LT. C/L
-22.00 1199.25
-8.00 1199.05
0.00 1199.21
8.00 1199.05
RT. C/L
22.00 1199.25
41.00 1199.31
T.I.
R/W
2.0%
-41.00 1197.21
-22.00 1197.59
-8.00 1197.31
8.00 1197.31
22.00 1197.59
41.00 1197.21
EST. MARSH DEPOSIT PROFILE
MARSH EXCAVATION REQ'D.
4.0:1
69.69 1193.30
STA =33+50
ORIGINAL EL =1199.0
EARTHWORK
VF =713 C.Y.
VC =133 C.Y.

RETAINING WALL
-60.00 1200.81
-57.00 1200.75
-41.00 1200.31
LT. C/L
-22.00 1200.25
-8.00 1200.05
0.00 1200.21
8.00 1200.05
RT. C/L
22.00 1200.25
41.00 1200.31
T.I.
R/W
2.0%
-41.00 1198.21
-22.00 1198.59
-8.00 1198.31
8.00 1198.31
22.00 1198.59
41.00 1198.21
-74.00 1195.87
EST. MARSH DEPOSIT PROFILE
MARSH EXCAVATION REQ'D.
4.0:1
72.76 1193.53
STA =33+00
ORIGINAL EL =1200.2
EARTHWORK
VF =786 C.Y.
VC =141 C.Y.

BEGIN RETAINING WALL
-60.00 1201.92
-57.00 1201.86
-41.00 1201.42
LT. C/L
-22.00 1201.36
-8.00 1201.16
0.00 1201.32
8.00 1201.16
RT. C/L
22.00 1201.36
41.00 1201.42
T.I.
R/W
2.0%
-41.00 1199.32
-22.00 1199.70
-8.00 1199.42
8.00 1199.42
22.00 1199.70
41.00 1199.32
-75.37 1197.81
EST. MARSH DEPOSIT PROFILE
MARSH EXCAVATION REQ'D.
4.0:1
76.95 1193.60
STA =32+50
ORIGINAL EL =1201.4
EARTHWORK
VF =858 C.Y.
VC =157 C.Y.
5' VERT.
10' HORZ.

STATE PROJECT NUMBER: 6651-01-00	HWY: CTH N	COUNTY: MARATHON	CROSS SECTIONS: CTH N	SHEET NO: 9.31	E

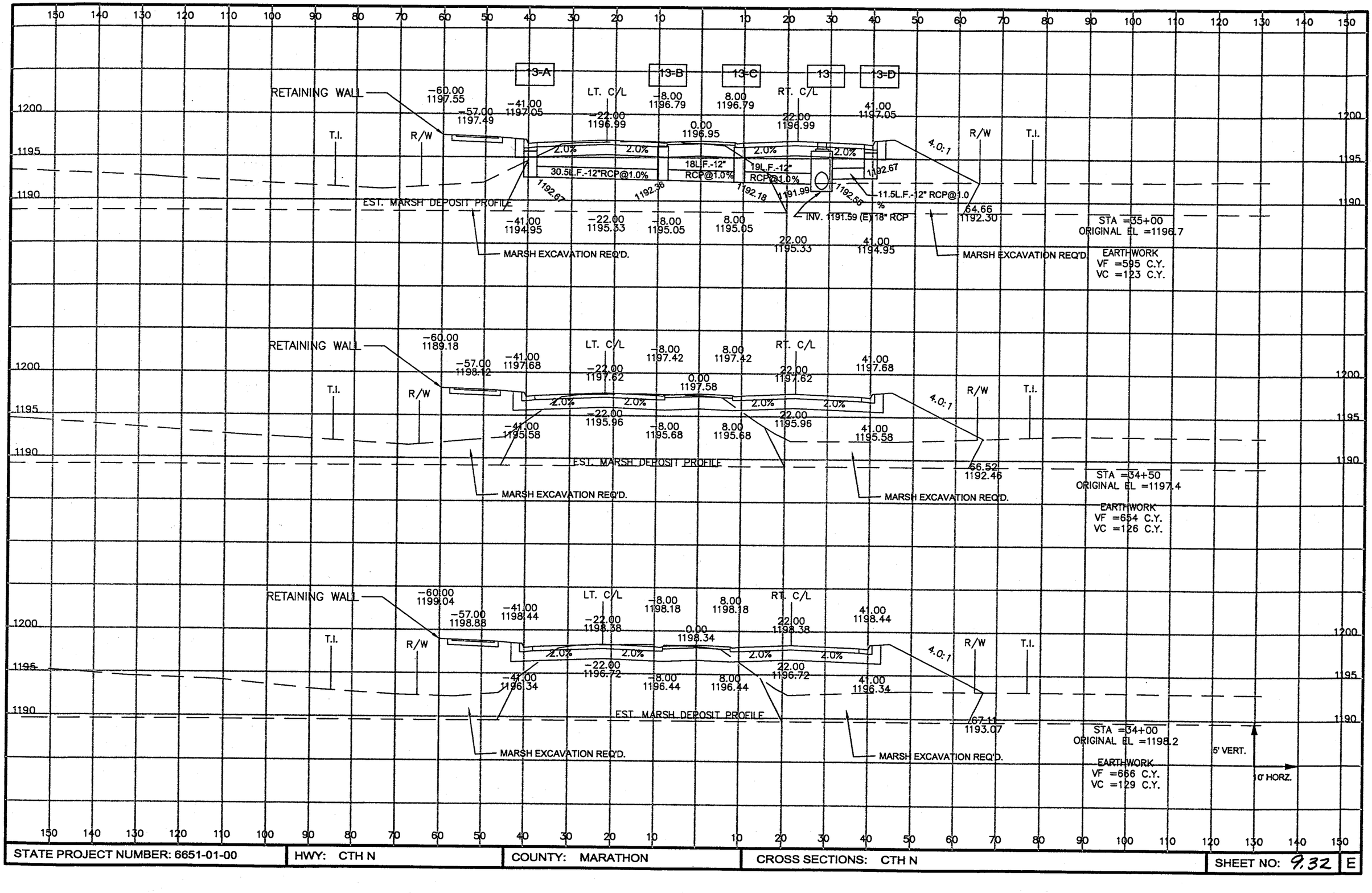

P:\DRAFT\28940100 CTH N West Arterial\topo surveytrc029001.dwg, Layout1, 10/03/2003 11:11:50 AM

STATE PROJECT NUMBER: 6651-01-00	HWY: CTH N	COUNTY: MARATHON	CROSS SECTIONS: CTH N	SHEET NO: 9.32	E

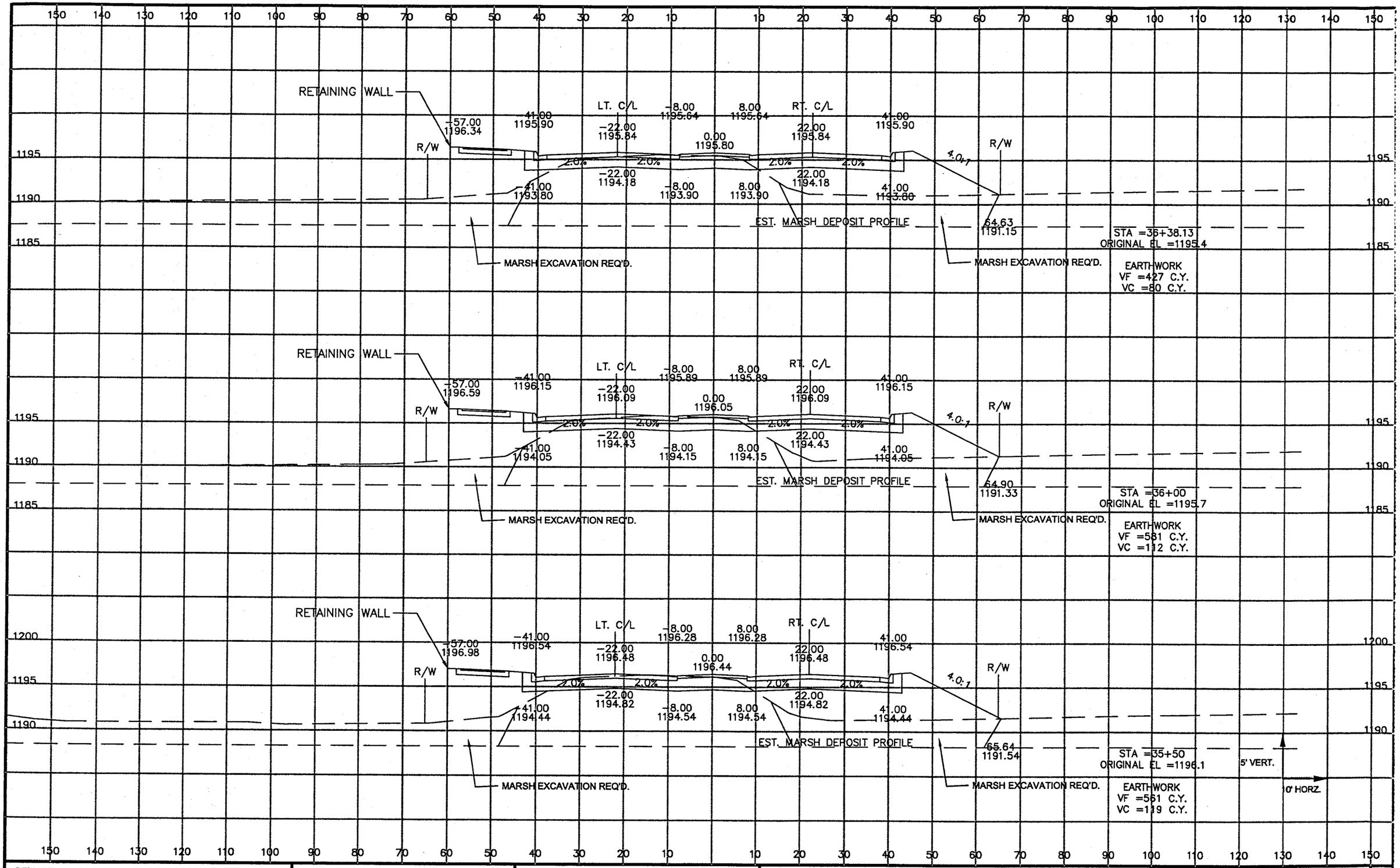

STATE PROJECT NUMBER: 6651-01-00	HWY: CTH N	COUNTY: MARATHON	CROSS SECTIONS: CTH N	SHEET NO: 9.33	E

P:\DRAFT\28940100 CTH N West Arterial\topo survey\rc030001.dwg, Layout1, 10/03/2003 12:54:24 PM

P:\DRAFT\28940100 CTH N West Arterial\topo survey\rc031001.dwg, Layout1, 10/03/2003 12:53:34 PM

RETAINING WALL

-60.00 1195.66 | -57.00 1195.60 | -41.00 1195.16 | LT. C/L | -22.00 1195.10 | -8.00 1194.90 | 0.00 1195.06 | 8.00 1194.90 | RT. C/L | 22.00 1195.10 | 41.00 1195.16

R/W | 2.0% | 2.0% | 2.0% | 2.0% | 4.0:1 | R/W

-41.00 1193.06 | -22.00 1193.44 | -8.00 1193.16 | 8.00 1193.16 | 22.00 1193.44 | 41.00 1193.06

EST. MARSH DEPOSIT PROFILE

64.03 1190.56

MARSH EXCAVATION REQ'D. | MARSH EXCAVATION REQ'D.

STA =37+50
ORIGINAL EL =1194.8

EARTHWORK
VF =534 C.Y.
VC =109 C.Y.

RETAINING WALL

-60.00 1195.99 | -57.00 1195.93 | -41.00 1195.49 | LT. C/L | -22.00 1195.43 | -8.00 1195.23 | 0.00 1195.39 | 8.00 1195.23 | RT. C/L | 22.00 1195.43 | 41.00 1195.49

R/W | 2.0% | 2.0% | 2.0% | 2.0% | 4.0:1 | R/W

-41.00 1193.39 | -22.00 1193.77 | -8.00 1193.49 | 8.00 1193.49 | 22.00 1193.77 | 41.00 1193.39

EST. MARSH DEPOSIT PROFILE

64.17 1190.86

MARSH EXCAVATION REQ'D. | MARSH EXCAVATION REQ'D.

STA =37+00
ORIGINAL EL =1195.0

EARTHWORK
VF =534 C.Y.
VC =103 C.Y.

RETAINING WALL

-60.00 1196.32 | -57.00 1196.26 | -41.00 1195.82 | LT. C/L | -22.00 1195.76 | -8.00 1195.56 | 0.00 1195.72 | 8.00 1195.56 | RT. C/L | 22.00 1195.76 | 41.00 1195.82

R/W | 2.0% | 2.0% | 2.0% | 2.0% | 4.0:1 | R/W

-41.00 1193.72 | -22.00 1194.10 | -8.00 1193.82 | 8.00 1193.82 | 22.00 1194.10 | 41.00 1193.72

EST. MARSH DEPOSIT PROFILE

64.53 1191.10

MARSH EXCAVATION REQ'D. | MARSH EXCAVATION REQ'D.

STA =36+50
ORIGINAL EL =1195.4

EARTHWORK
VF =128 C.Y.
VC =24 C.Y.

5' VERT.

10' HORZ.

STATE PROJECT NUMBER: 6651-01-00	HWY: CTH N	COUNTY: MARATHON	CROSS SECTIONS: CTH N	SHEET NO: 9.34	E

P:\DRAFT\28940100 CTH N West Arterial\topo survey\rc032001.dwg, Layout1, 10/03/2003 12:52:56 PM

RETAINING WALL

-60.00 1195.04
-57.00 1194.98
-40.50 1194.52
LT. C/L
-22.00 1194.44
-8.50 1194.81
8.50 1194.66
RT. C/L
22.00 1194.44
40.50 1194.71
R/W
2.0% 4.0% 2.0% 0.8% 2.0% 0.8% 4.0:1
-22.00 1192.78
-8.50 1192.67
8.50 1192.51
22.00 1192.78
-40.50 1192.41
40.50 1192.63
EST. MARSH DEPOSIT PROFILE
63.97 1190.00
MARSH EXCAVATION REQ'D.
MARSH EXCAVATION REQ'D.
STA =38+50
ORIGINAL EL =1194.2
EARTHWORK
VF =522 C.Y.
VC =122 C.Y.

14-A 14-B 14-C 14 14-D

RETAINING WALL

-60.00 1195.37
-57.00 1195.31
-40.50 1194.85
LT. C/L
-22.00 1194.77
-8.50 1195.07
0.00 1195.18
8.50 1195.02
RT. C/L
22.00 1194.77
40.50 1194.92
R/W
2.0% 4.0% 2.0% 1.6% 2.0% 1.6% 4.0:1
30.5L.F.-12"RCP@1.0%
18L.F.-12" RCP@1.0%
19L.F.-12" RCP@1.0%
1190.45 1190.14 1189.96 1189.77 1190.40 1190.51
11.5L.F.-12" RCP@1.0%
EST. MARSH DEPOSIT PROFILE
-40.50 1192.74
-22.00 1193.11
-8.50 1192.90
8.50 1192.84
22.00 1193.11
40.50 1192.82
INV. 1189.59 (W) 18" RCP
INV. 1189.39 (E) 24" RCP
63.95 1190.21
MARSH EXCAVATION REQ'D.
MARSH EXCAVATION REQ'D.
STA =38+00
ORIGINAL EL =1194.6
EARTHWORK
VF =287 C.Y.
VC =66 C.Y.

RETAINING WALL

-60.00 1195.55
-57.00 1195.49
-40.50 1195.03
LT. C/L
-22.00 1194.95
-8.50 1195.21
0.00 1195.38
8.50 1195.21
RT. C/L
22.00 1194.95
40.50 1195.03
R/W
2.0% 4.0% 2.0% 2.0% 2.0% 2.0% 4.0:1
-22.00 1193.29
-8.50 1193.02
8.50 1193.02
22.00 1193.29
-40.50 1192.92
40.50 1192.92
EST. MARSH DEPOSIT PROFILE
64.63 1190.16
MARSH EXCAVATION REQ'D.
MARSH EXCAVATION REQ'D.
STA =37+73
ORIGINAL EL =1194.7
EARTHWORK
VF =249 C.Y.
VC =54 C.Y.
5' VERT.
10' HORZ.

1195 1190 1185

150 140 130 120 110 100 90 80 70 60 50 40 30 20 10 10 20 30 40 50 60 70 80 90 100 110 120 130 140 150

STATE PROJECT NUMBER: 6651-01-00	HWY: CTH N	COUNTY: MARATHON	CROSS SECTIONS: CTH N	SHEET NO: 9.35	E

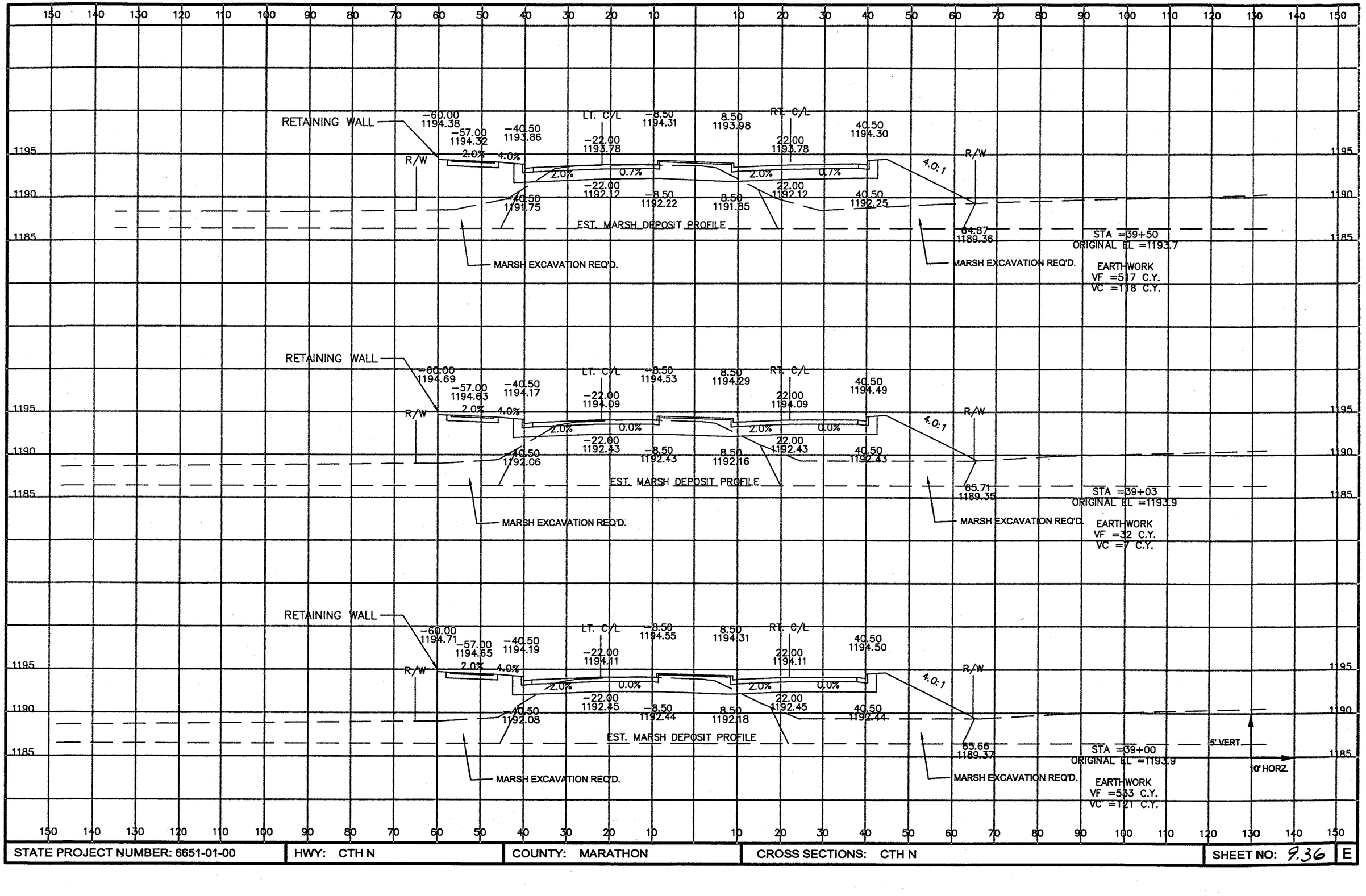

STATE PROJECT NUMBER: 6651-01-00	HWY: CTH N	COUNTY: MARATHON	CROSS SECTIONS: CTH N	SHEET NO: 9.36	E

P:\DRAFT\28940100 CTH N West Arterial\topo survey\rc033001.dwg, Layout1, 10/03/2003 12:52:13 PM

P:\DRAFT\28940100 CTH N West Arterial\toppo survey\rc034001.dwg, Layout1, 10/03/2003 12:26:30 PM

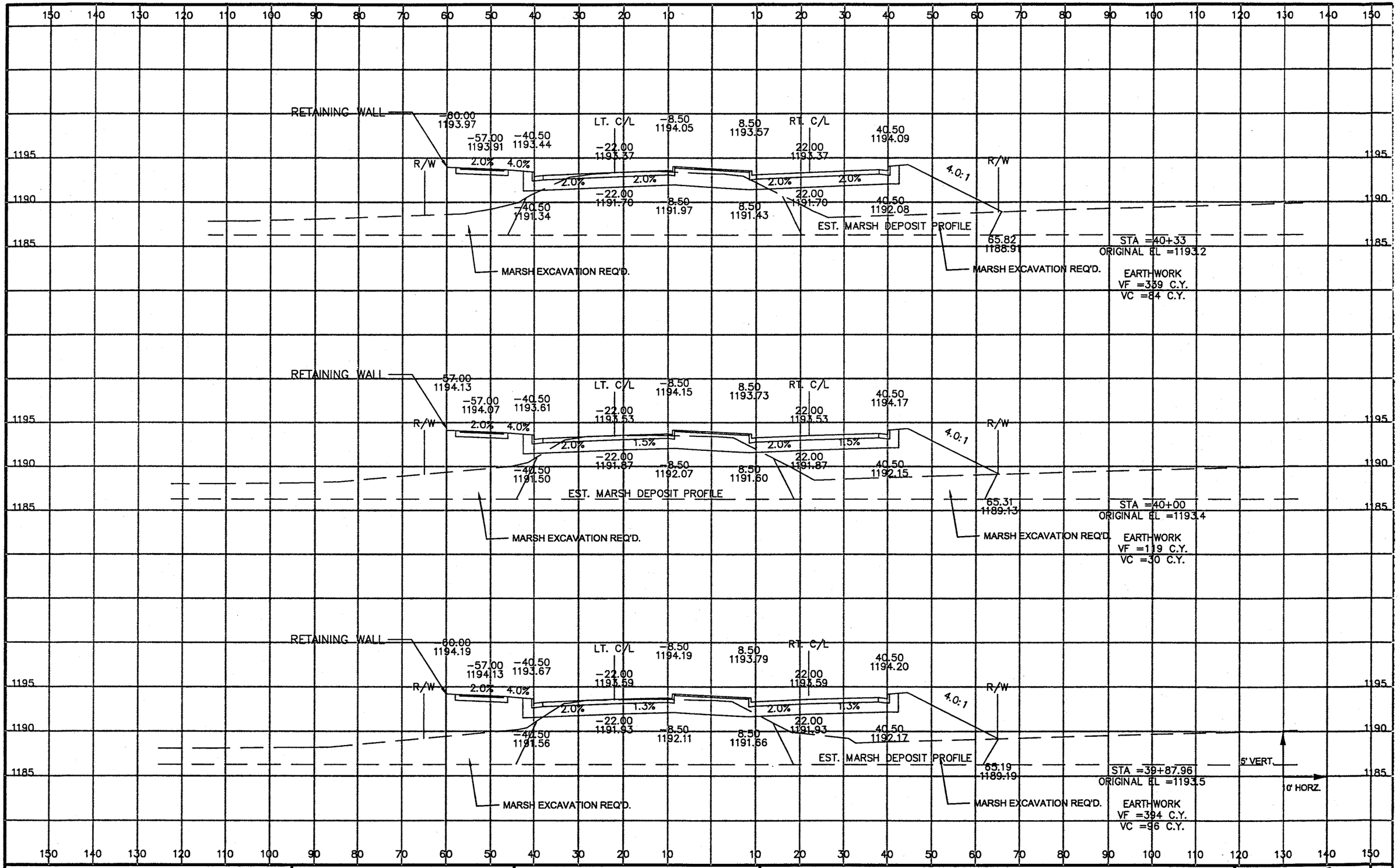

STATE PROJECT NUMBER: 6651-01-00	HWY: CTH N	COUNTY: MARATHON	CROSS SECTIONS: CTH N	SHEET NO: 9.37	E

RETAINING WALL

R/W

-57.00
1193.32

-40.50
1192.86

LT. C/L
-22.00
1192.78

-8.50
1193.46

8.50
1192.98

RT. C/L
22.00
1192.78

40.50
1193.50

0.00
1193.22

2.0%
4.0%
2.0%
2.0%
2.0%
2.0%
4.0:1

-81.10
1187.83

-40.50
1190.75

-22.00
1191.12

-8.50
1191.39

8.50
1190.85

22.00
1191.12

40.50
1191.49

EST. MARSH DEPOSIT PROFILE

MARSH EXCAVATION REQ'D.

64.38
1188.69

MARSH EXCAVATION REQ'D

STA =41+50
ORIGINAL EL =1193.2

EARTHWORK
VF =491 C.Y.
VC =155 C.Y.

15-A | 15-B | 15-C | 15 | 15-D

RETAINING WALL

R/W

-57.00
1193.57

-40.50
1193.11

LT. C/L
-22.00
1193.03

-8.50
1193.71

8.50
1193.23

RT. C/L
22.00
1193.03

40.50
1193.75

0.00
1193.47

2.0%
4.0%
2.0%
2.0%
2.0%
2.0%
4.0:1

80L.F.-12"RCP@1.0%

18L.F.-12" RCP@1.0%

19L.F.-12" RCP@1.0%

11L.F.-12" RCP@1.0%

1189.27

1188.71

1188.41

1188.23

1188.04

1189.15

INV. 1187.23 (E,W) 24" RCP

-81.28
1188.04

-40.50
1191.00

-22.00
1191.37

-8.50
1191.64

8.50
1191.10

22.00
1191.37

40.50
1191.74

EST. MARSH DEPOSIT PROFILE

MARSH EXCAVATION REQ'D.

64.75
1188.85

MARSH EXCAVATION REQ'D.

STA =41+00
ORIGINAL EL =1193.3

EARTHWORK
VF =494 C.Y.
VC =137 C.Y.

RETAINING WALL

R/W

-57.00
1193.81

-40.50
1193.35

LT. C/L
-22.00
1193.27

-8.50
1193.95

8.50
1193.47

RT. C/L
22.00
1193.27

40.50
1193.99

0.00
1193.71

2.0%
4.0%
2.0%
2.0%
2.0%
2.0%
4.0:1

-81.23
1188.30

-40.50
1191.24

-22.00
1191.81

-8.50
1191.88

8.50
1191.34

22.00
1191.81

40.50
1191.98

EST. MARSH DEPOSIT PROFILE

MARSH EXCAVATION REQ'D.

66.03
1188.77

MARSH EXCAVATION REQ'D.

STA =40+51
ORIGINAL EL =1193.2

EARTHWORK
VF =186 C.Y.
VC =47 C.Y.

5' VERT.

10' HORZ.

STATE PROJECT NUMBER: 6651-01-00	HWY: CTH N	COUNTY: MARATHON	CROSS SECTIONS: CTH N	SHEET NO: 9.38	E

P:\DRAFT\28940100 CTH N West Arterial\topo survey\vc053001.dwg, Layout1, 10/03/2003 12:25:42 PM

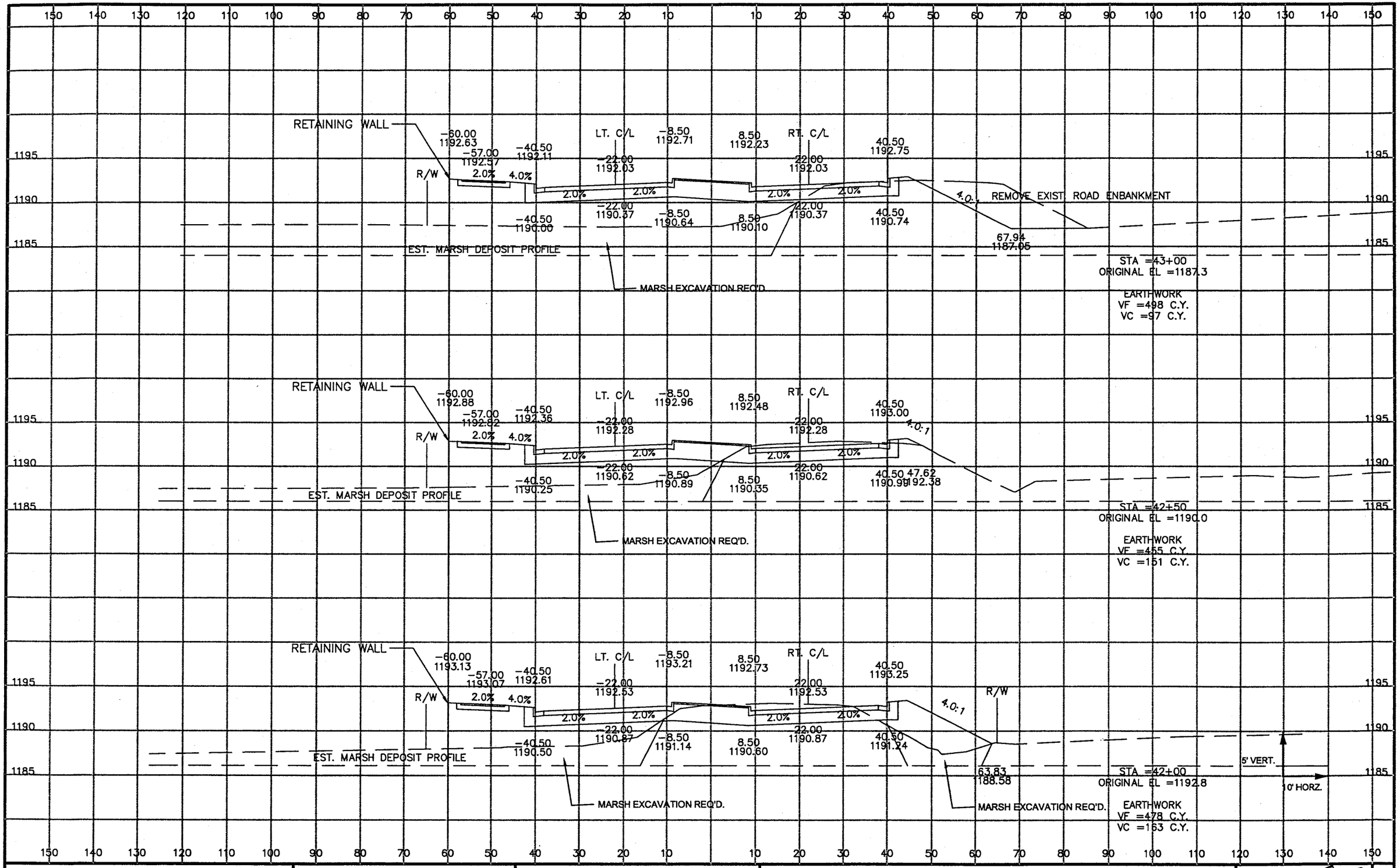

STATE PROJECT NUMBER: 6651-01-00	HWY: CTH N	COUNTY: MARATHON	CROSS SECTIONS: CTH N	SHEET NO: 9.39	E

P:\DRAFT\28940100 CTH N West Arterial\topo survey\rc036001.dwg, Layout1, 10/03/2003 12:49:23 PM

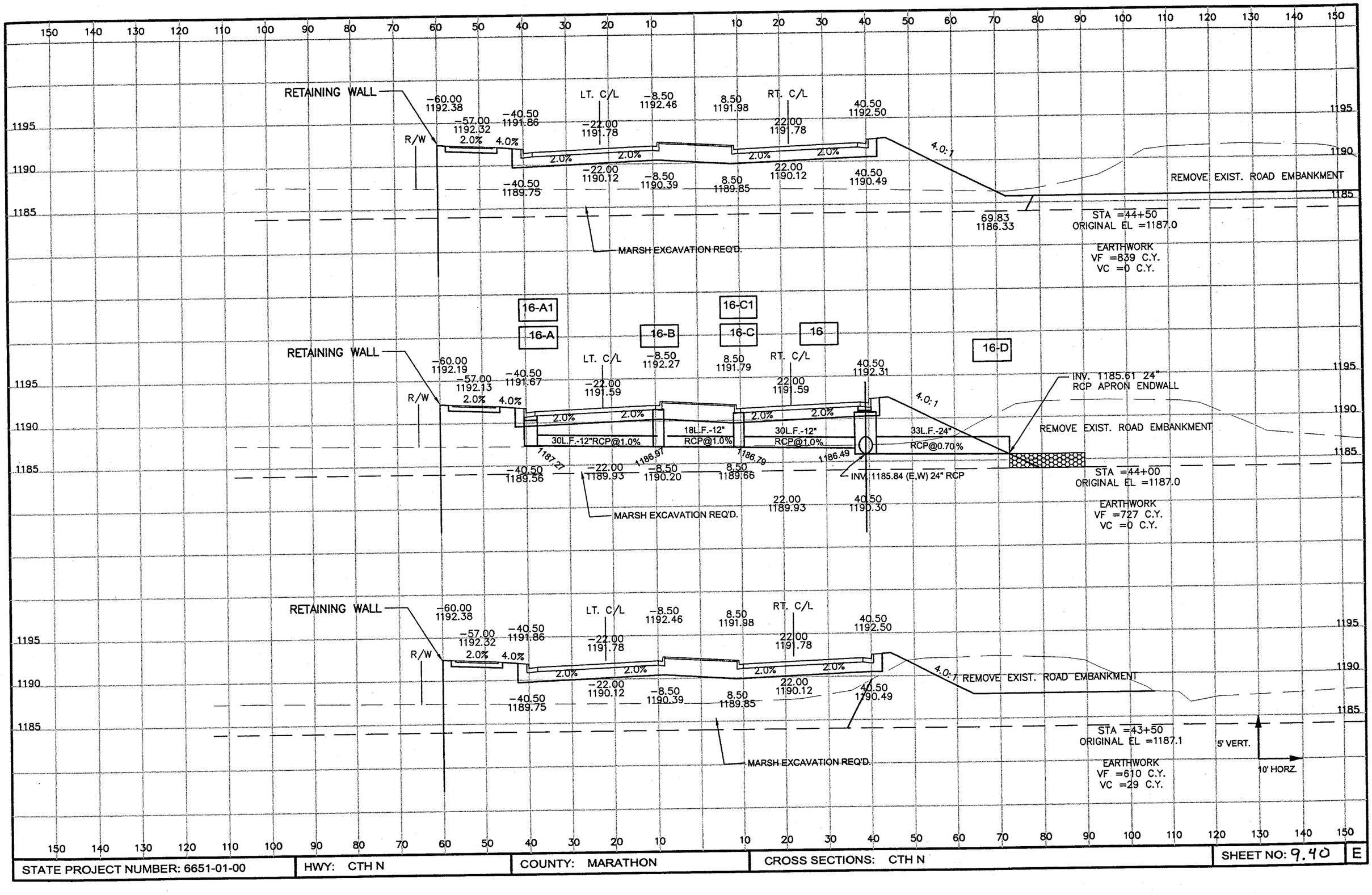

STATE PROJECT NUMBER: 6651-01-00	HWY: CTH N	COUNTY: MARATHON	CROSS SECTIONS: CTH N	SHEET NO: 9.40	E

P:\DRAFT\28940100 CTH N West Arterial\topo survey\rc037001.dwg, Layout1, 2/13/2004 7:22:07 AM, \\CWE\q_lj8000

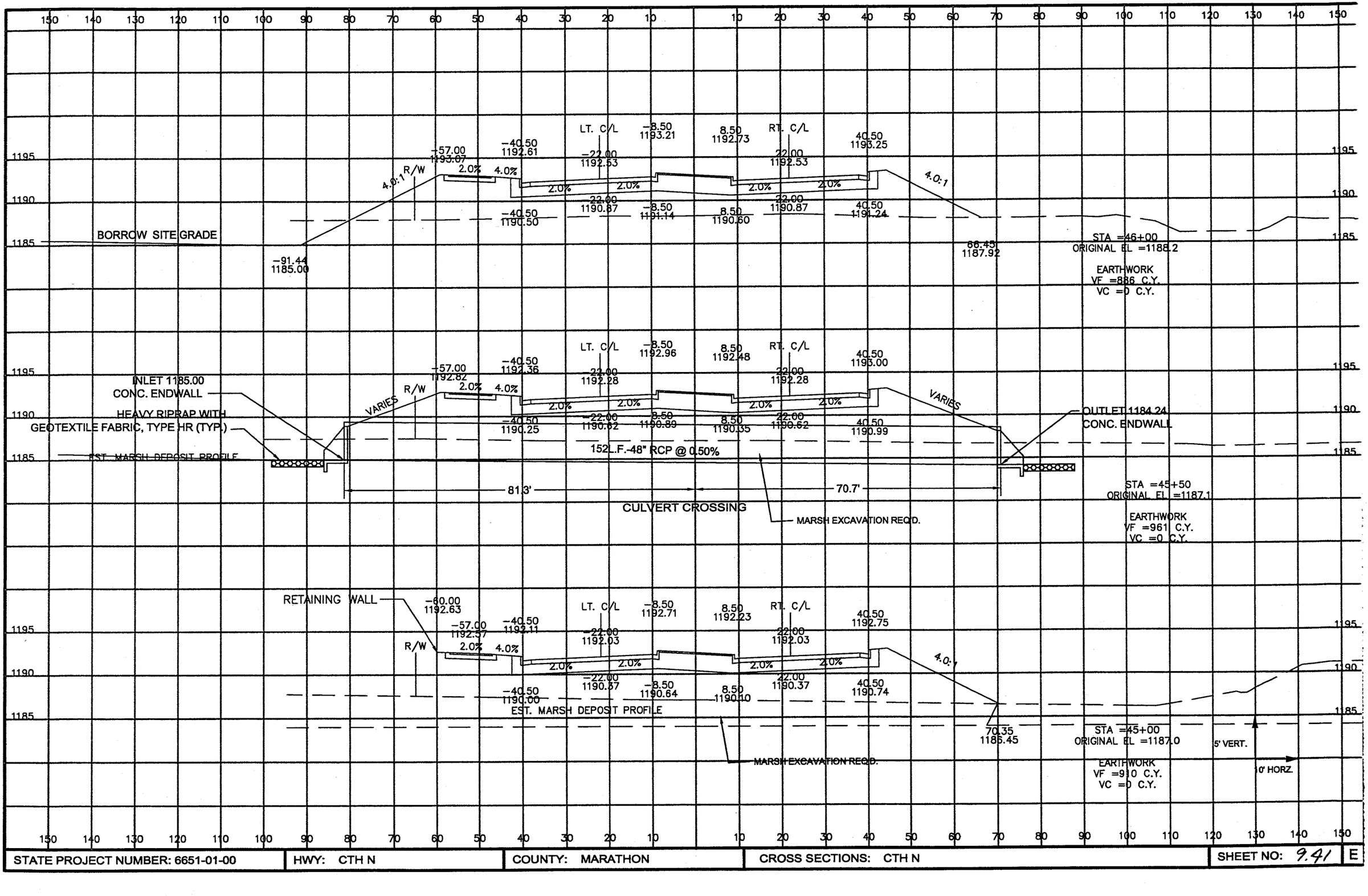

STATE PROJECT NUMBER: 6651-01-00	HWY: CTH N	COUNTY: MARATHON	CROSS SECTIONS: CTH N	SHEET NO: 9.41	E

P:\DRAFT\28940100 CTH N West Arterial\topo survey\rcd038001.dwg, Layout1, 10/30/2003 09:37:27 AM

P:\DRAFT\28940100 CTH N West Arterial\topo survey\rc039001.dwg, Layout1, 2/19/2004 12:28:18 PM

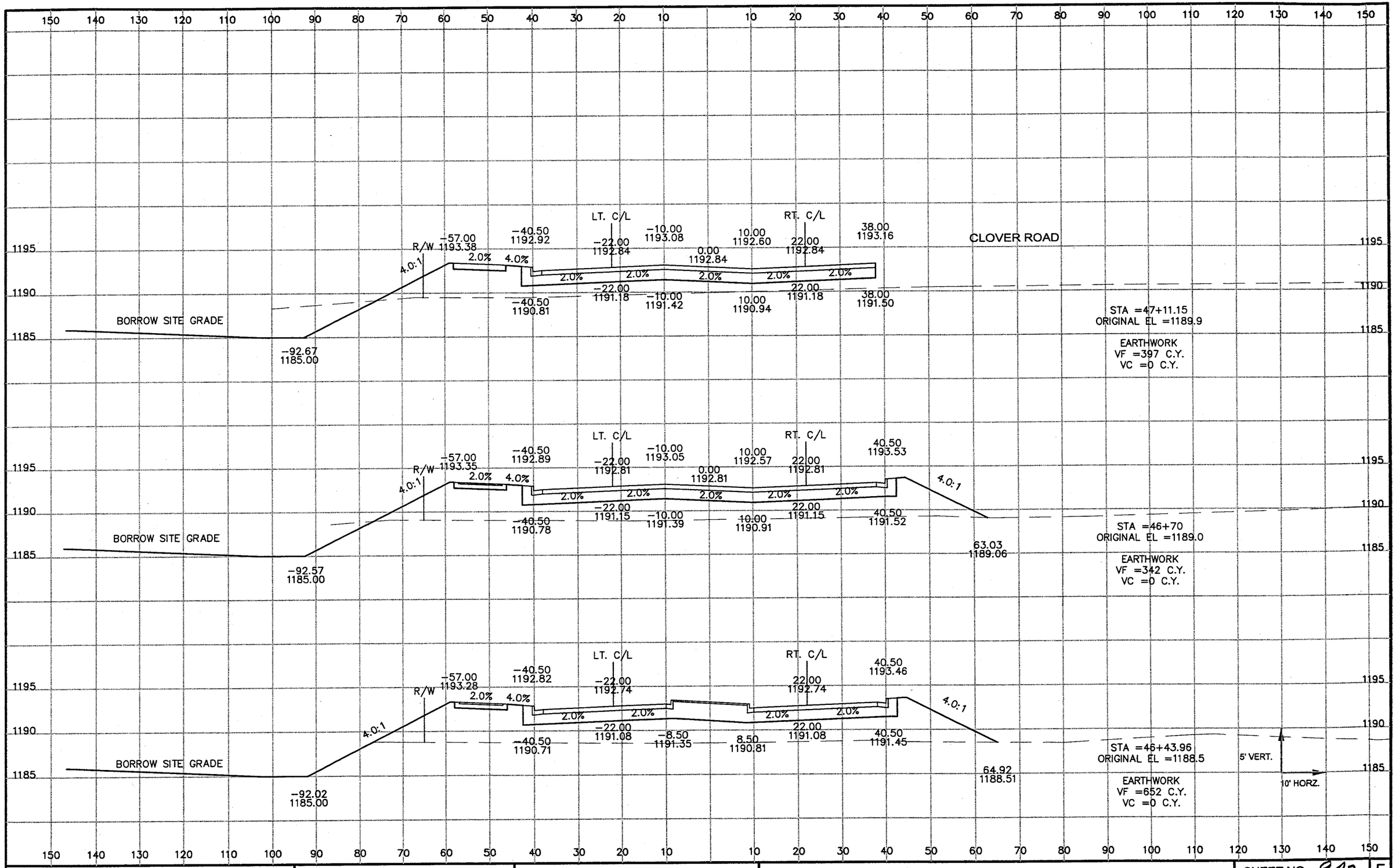

STATE PROJECT NUMBER: 6651-01-00	HWY: CTH N	COUNTY: MARATHON	CROSS SECTIONS: CTH N	SHEET NO: 9.42	E

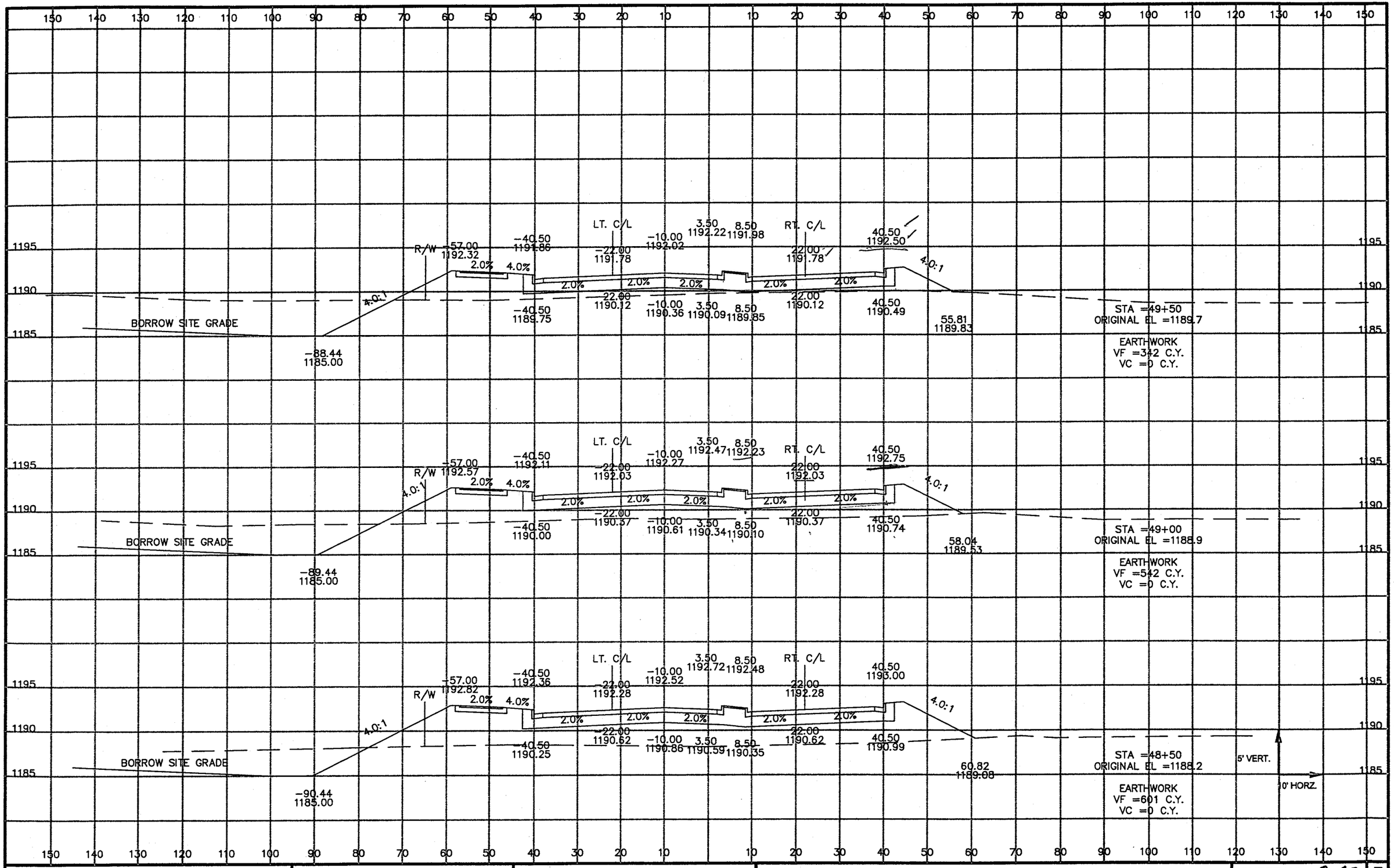

STATE PROJECT NUMBER: 6651-01-00	HWY: CTH N	COUNTY: MARATHON	CROSS SECTIONS: CTH N	SHEET NO: 9.43	E

P:\DRAFT\28940100 CTH N West Arterial\topo survey\rc041001.dwg, Layout1, 12/12/2002 11:52:32 AM

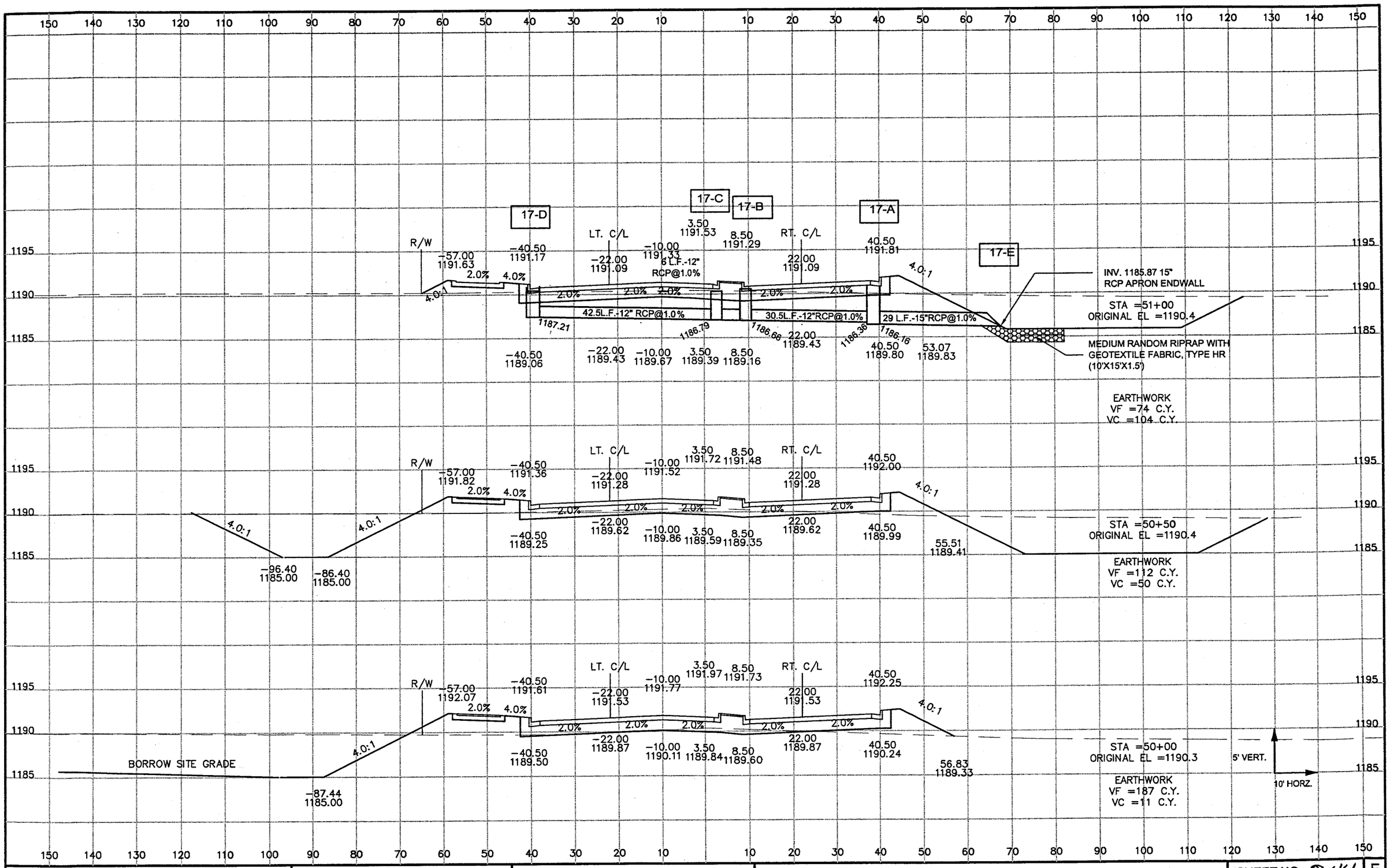

STATE PROJECT NUMBER: 6651-01-00	HWY: CTH N	COUNTY: MARATHON	CROSS SECTIONS: CTH N	SHEET NO: 9.44	E

P:\DRAFT\2894\0100 CTH N West Arterial\topo survey\rc042001.dwg, Layout1, 2/12/2004 11:00:52 AM, \\CWE\lq_lj8000

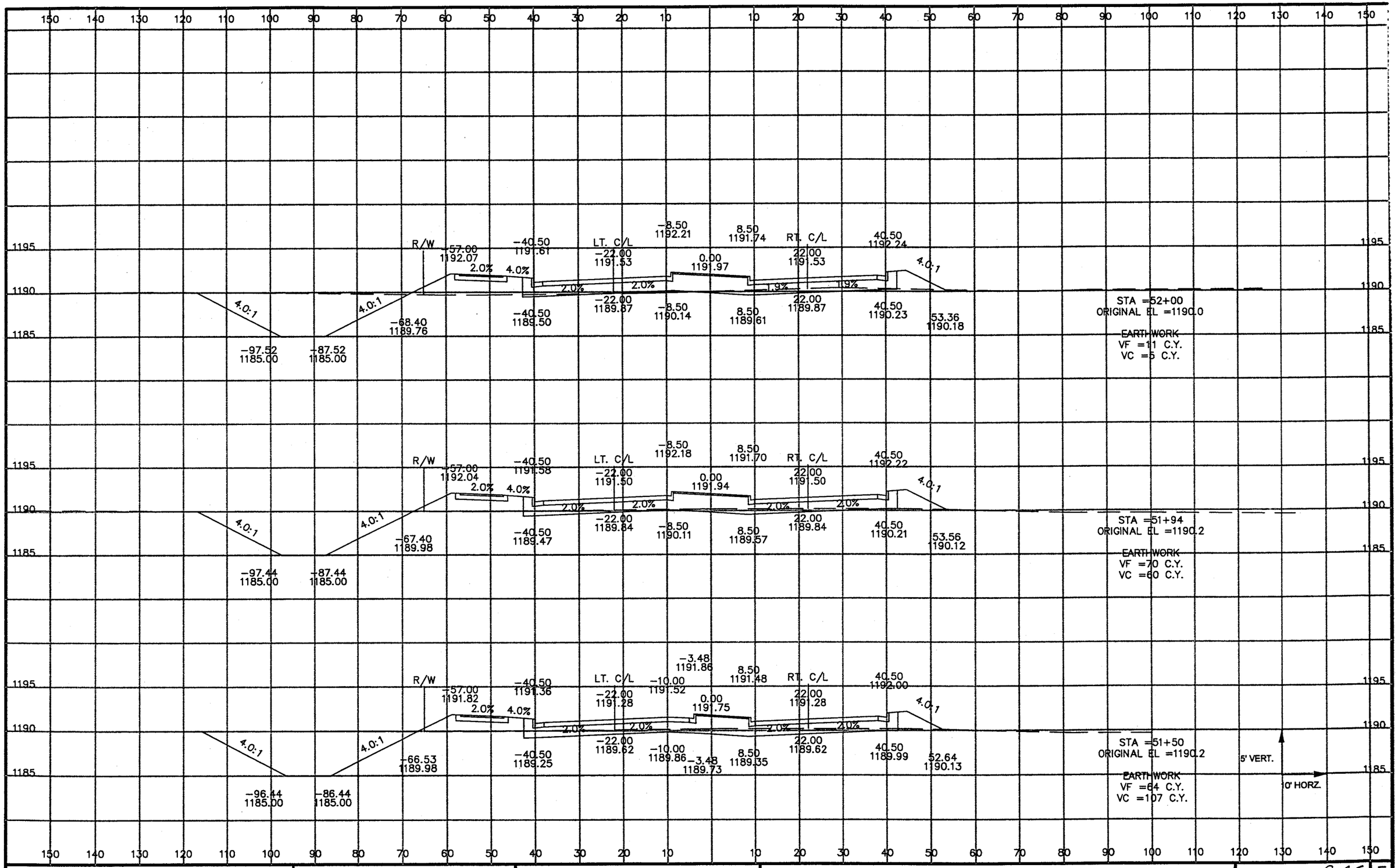

STATE PROJECT NUMBER: 6651-01-00	HWY: CTH N	COUNTY: MARATHON	CROSS SECTIONS: CTH N	SHEET NO: 9.45	E

P:\DRAFT\28940100 CTH N West Arterial\topo survey\rc047001.dwg, Layout1, 10/08/2003 09:03:57 AM

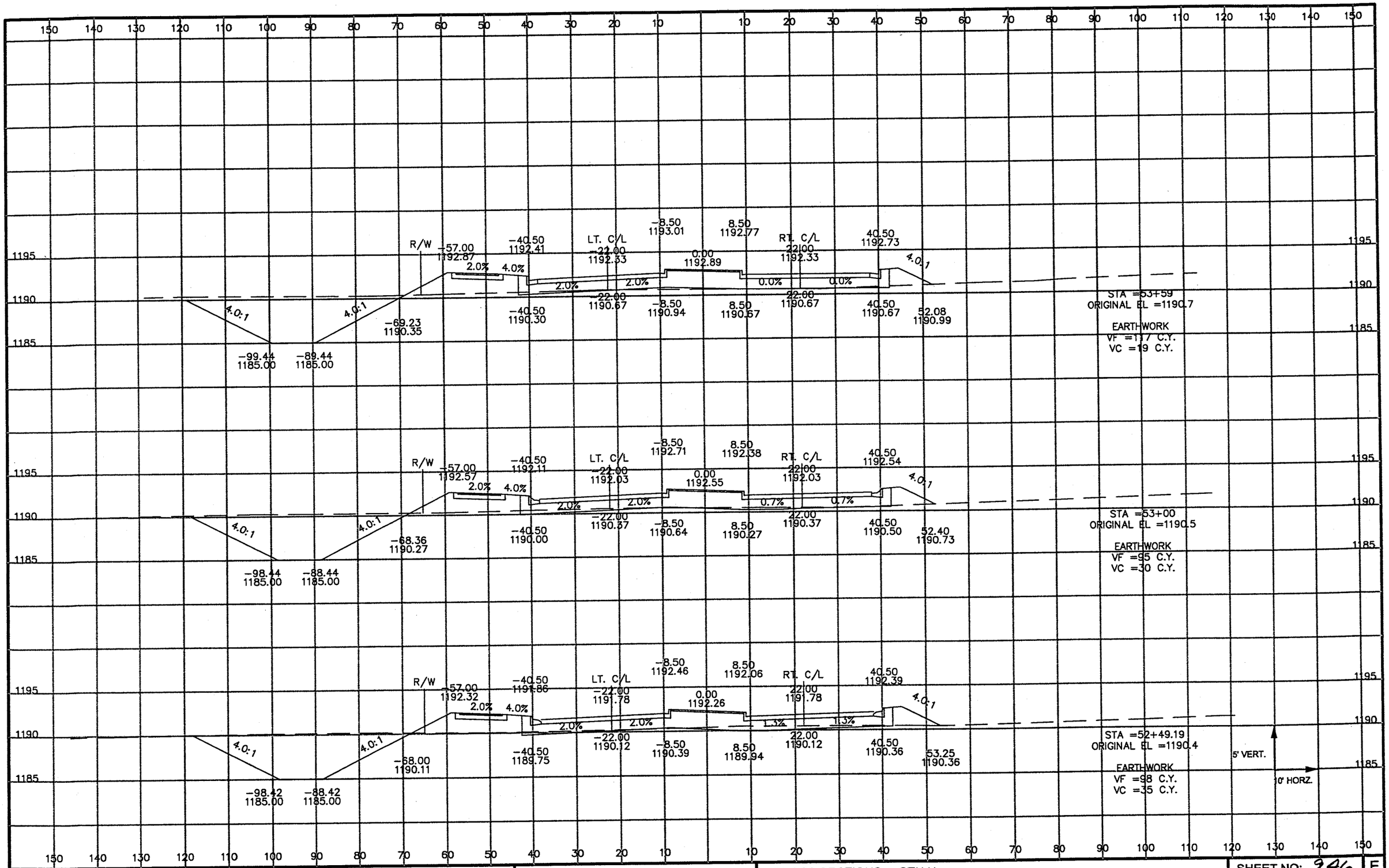

P:\DRAFT\28940100 CTH N West Arterial\topo survey\rc048001.dwg, Layout1, 10/03/2003 02:11:33 PM

STATE PROJECT NUMBER: 6651-01-00	HWY: CTH N	COUNTY: MARATHON	CROSS SECTIONS: CTH N	SHEET NO: 9.46	E

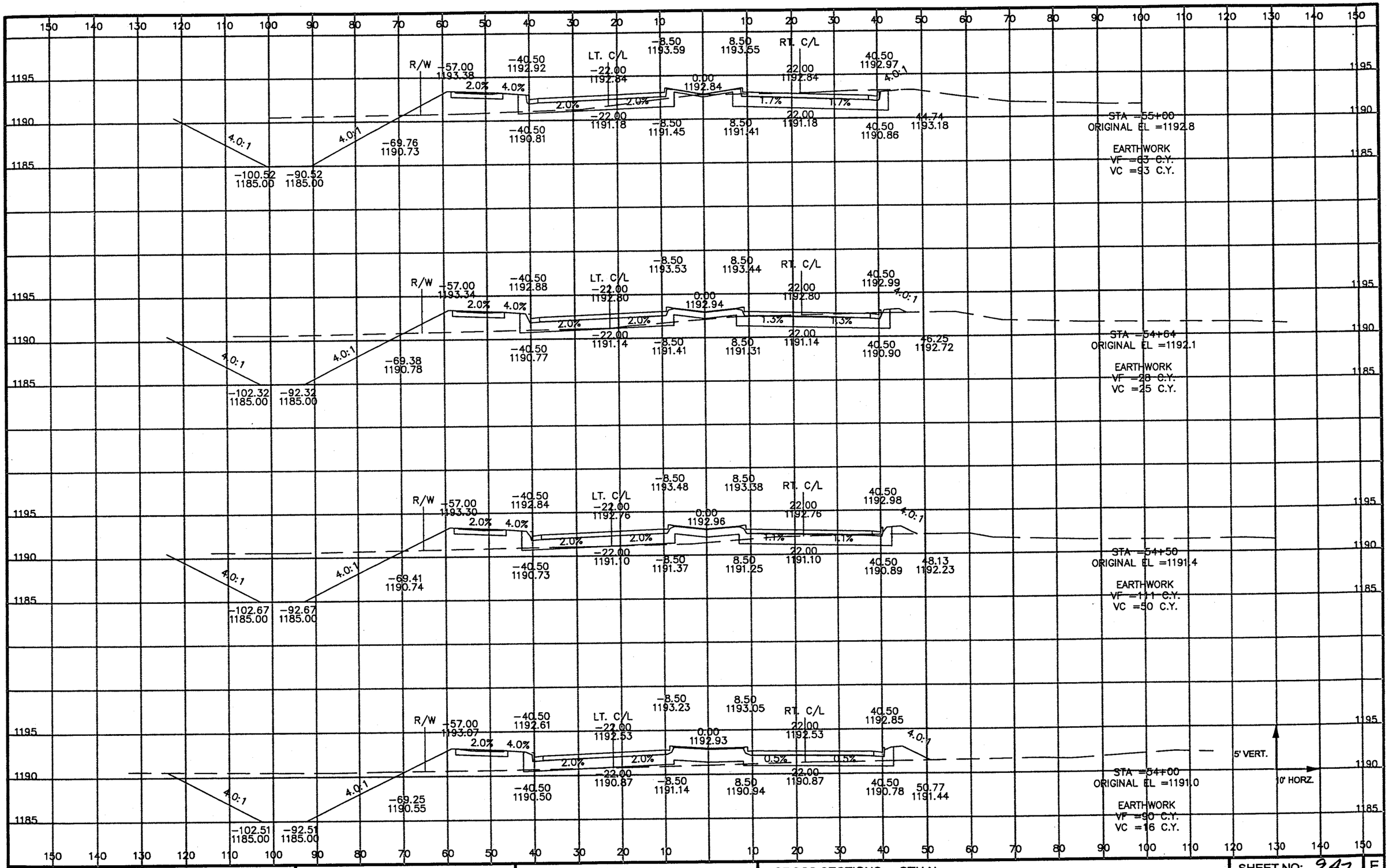

STATE PROJECT NUMBER: 6651-01-00	HWY: CTH N	COUNTY: MARATHON	CROSS SECTIONS: CTH N	SHEET NO: 9.47	E

P:\DRAFT\28940100 CTH N West Arterial\topo survey\rc049001.dwg, Layout1, 10/03/2003 02:11:58 PM

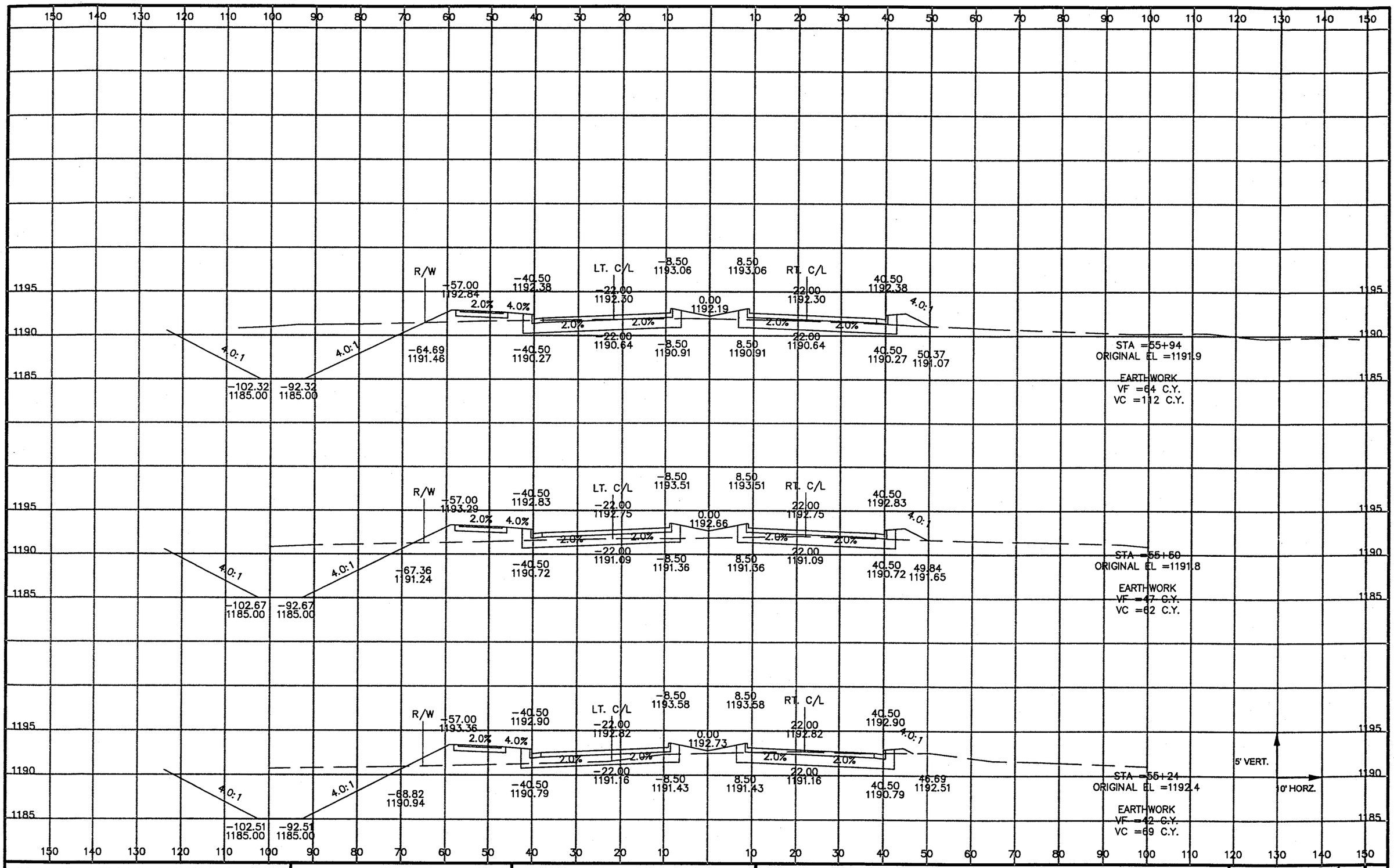

P:\DRAFT\28940100 CTH N West Arterial\topo survey\vrc050001.dwg, Layout1, 10/03/2003 02:12:14 PM

STATE PROJECT NUMBER: 6651-01-00	HWY: CTH N	COUNTY: MARATHON	CROSS SECTIONS: CTH N	SHEET NO: 9.48	E

P:\DRAFT\28940100 CTH N West Arterial\topo survey\rc043001.dwg, Layout1, 10/03/2003 02:09:43 PM

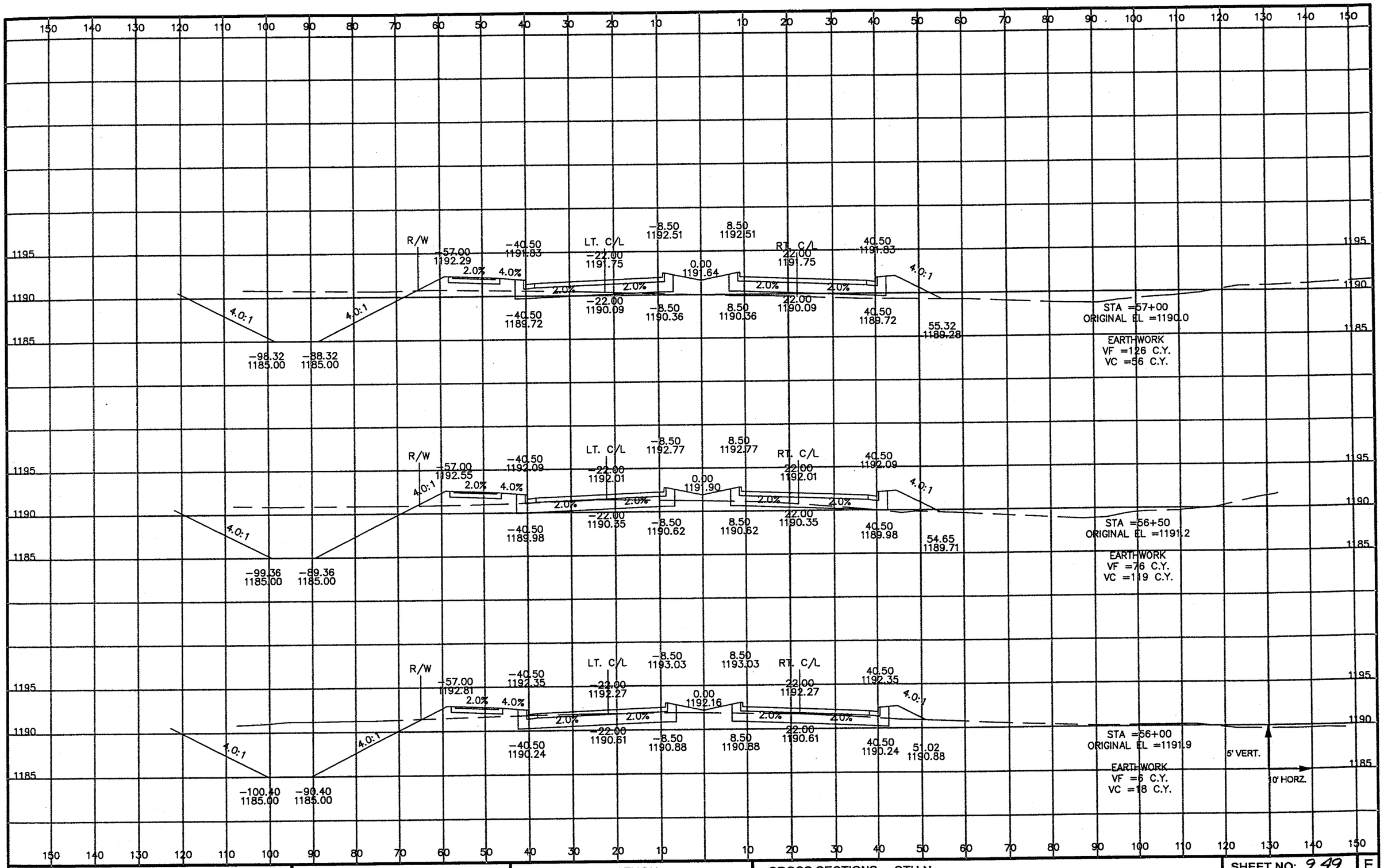

STATE PROJECT NUMBER: 6651-01-00	HWY: CTH N	COUNTY: MARATHON	CROSS SECTIONS: CTH N	SHEET NO: 9.49	E

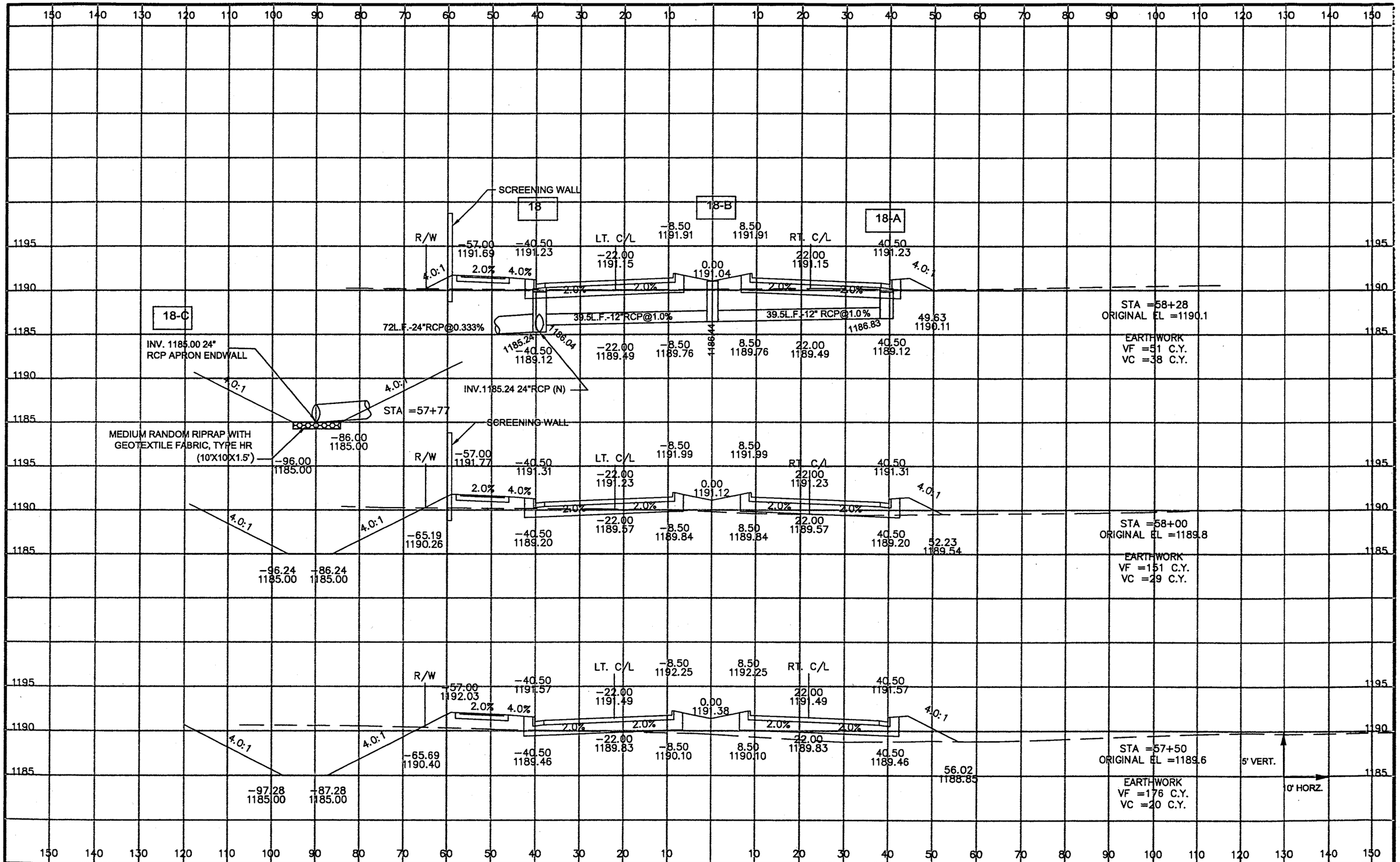

STATE PROJECT NUMBER: 6651-01-00	HWY: CTH N	COUNTY: MARATHON	CROSS SECTIONS: CTH N	SHEET NO: 9.50	E

P:\DRAFT\28940100 CTH N West Arterial\topo survey\rc044001.dwg, Layout1, 10/03/2003 02:10:06 PM

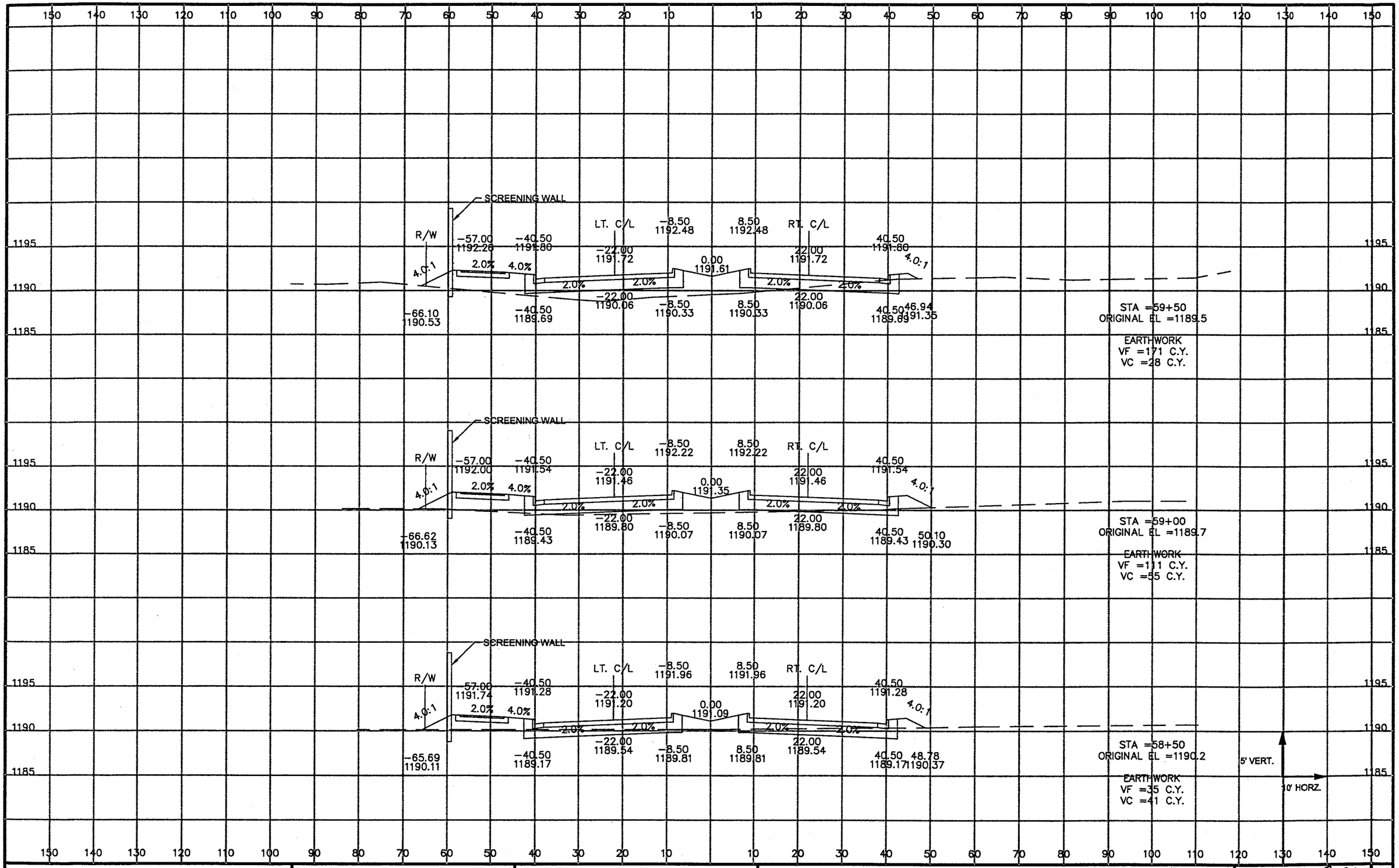

P:\DRAFT\28940100 CTH N West Arterial\topo survey\rc045001.dwg, Layout1, 10/03/2003 02:10:23 PM

STATE PROJECT NUMBER: 6651-01-00	HWY: CTH N	COUNTY: MARATHON	CROSS SECTIONS: CTH N	SHEET NO: 9.51 E

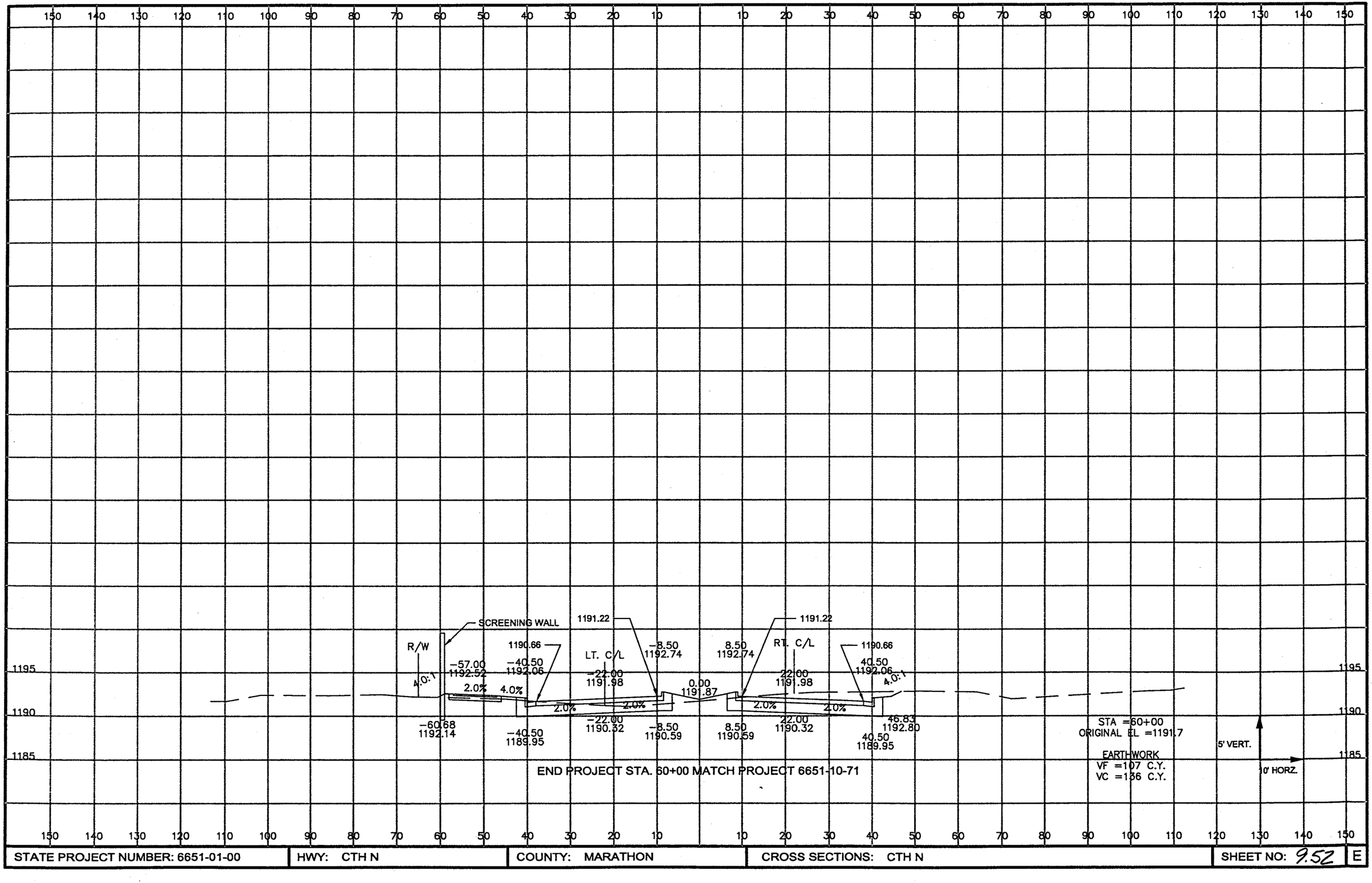

STATE PROJECT NUMBER: 6651-01-00	HWY: CTH N	COUNTY: MARATHON	CROSS SECTIONS: CTH N	SHEET NO: 9.52	E

P:\DRAFT\28940100 CTH N West Arterial\topo survey\rc046001.dwg, Layout1, 10/03/2003 02:10:57 PM

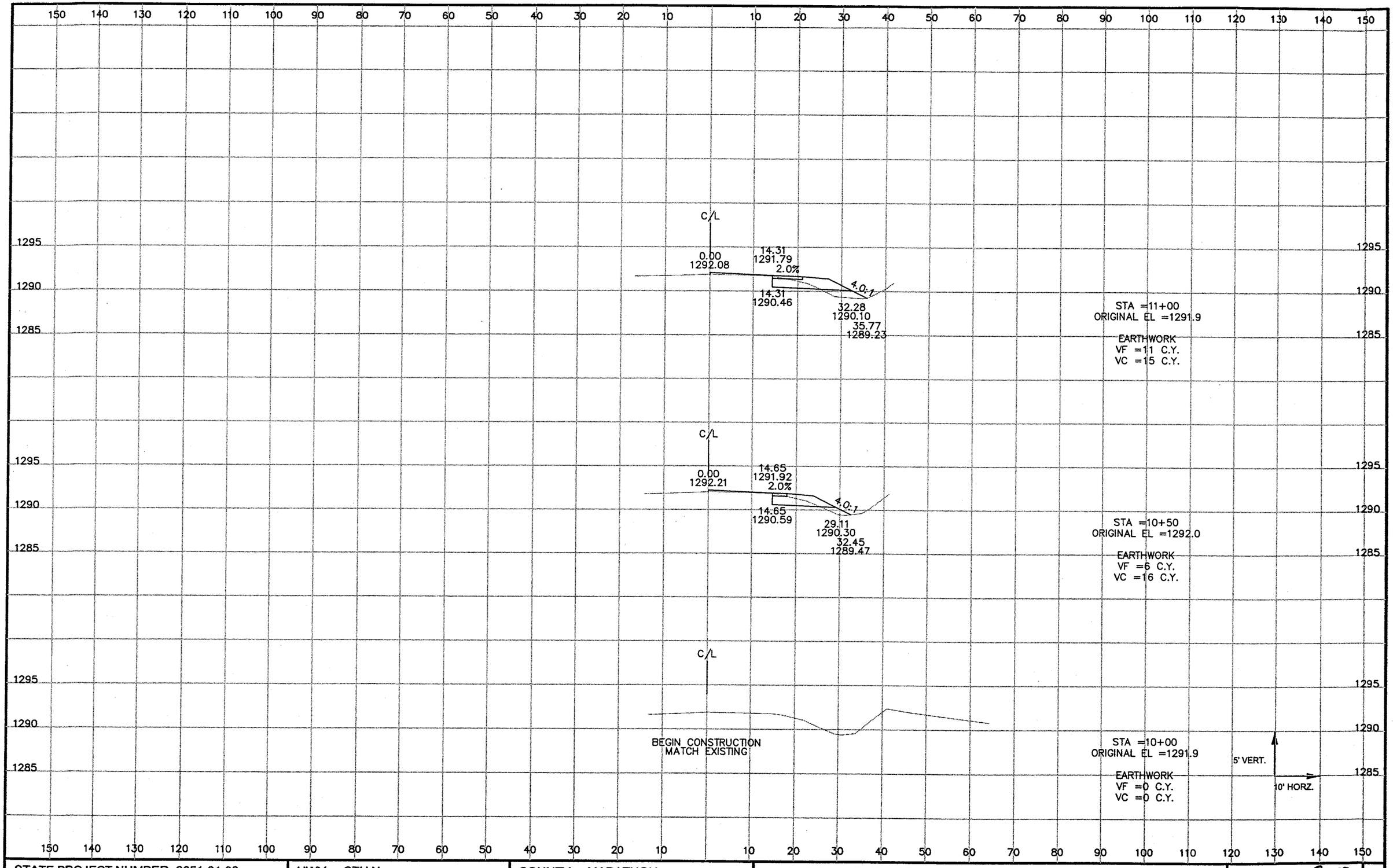

P:\draft\28940100 cth n west arterial\topo survey\rc011002.dwg, Layout1, 2/17/2004 5:01:53 PM

006002

STATE PROJECT NUMBER: 6651-01-00	HWY: CTH N	COUNTY: MARATHON	CROSS SECTIONS: CTH KK	SHEET NO: 9.53	E

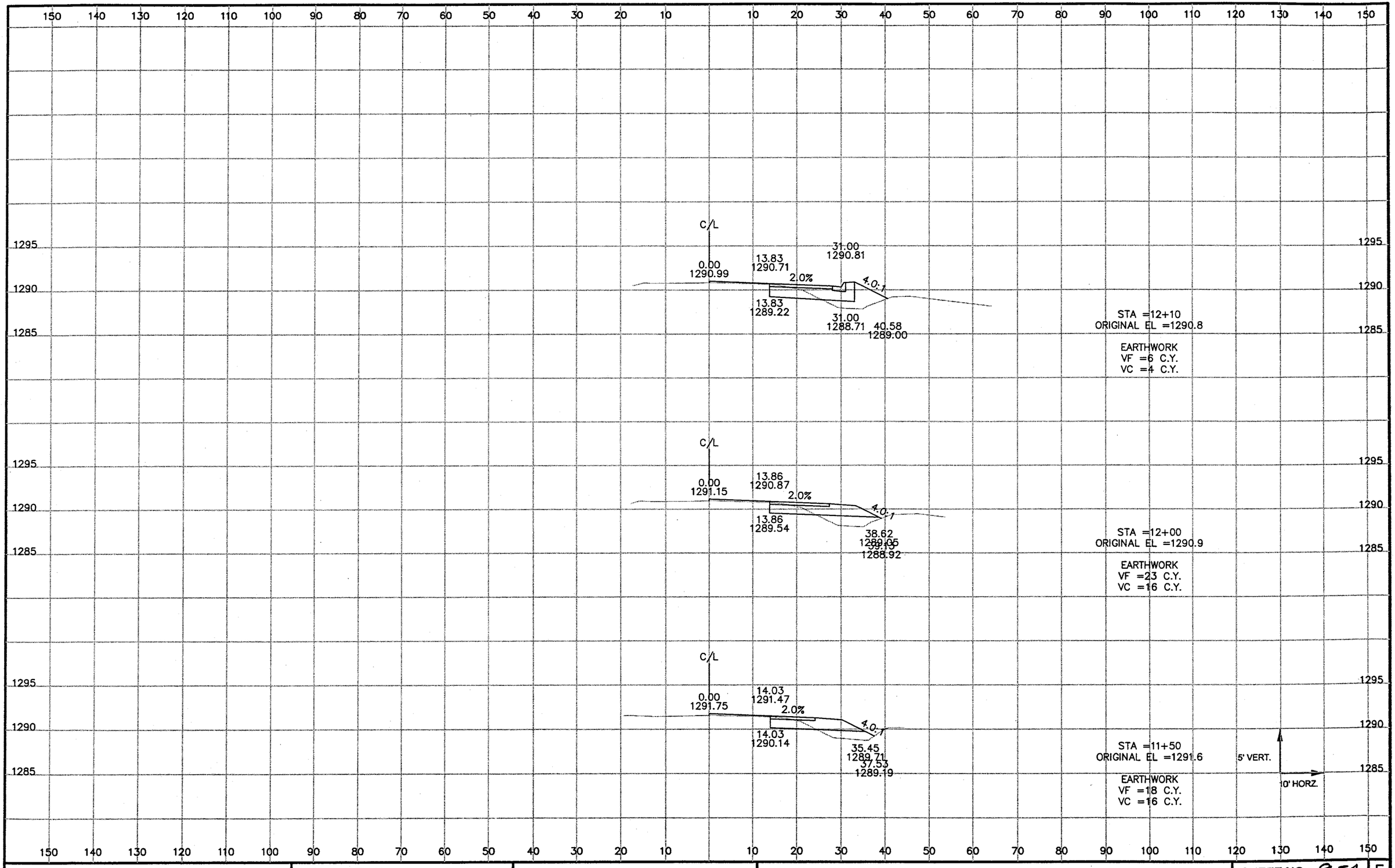

STATE PROJECT NUMBER: 6651-01-00 | HWY: CTH N | COUNTY: MARATHON | CROSS SECTIONS: CTH KK | SHEET NO: 9.54 | E

2004

P:\draft\28940100 cth n west arterialltopo surveyirc012002.dwg, Layout1, 2/17/2004 5:02:50 PM

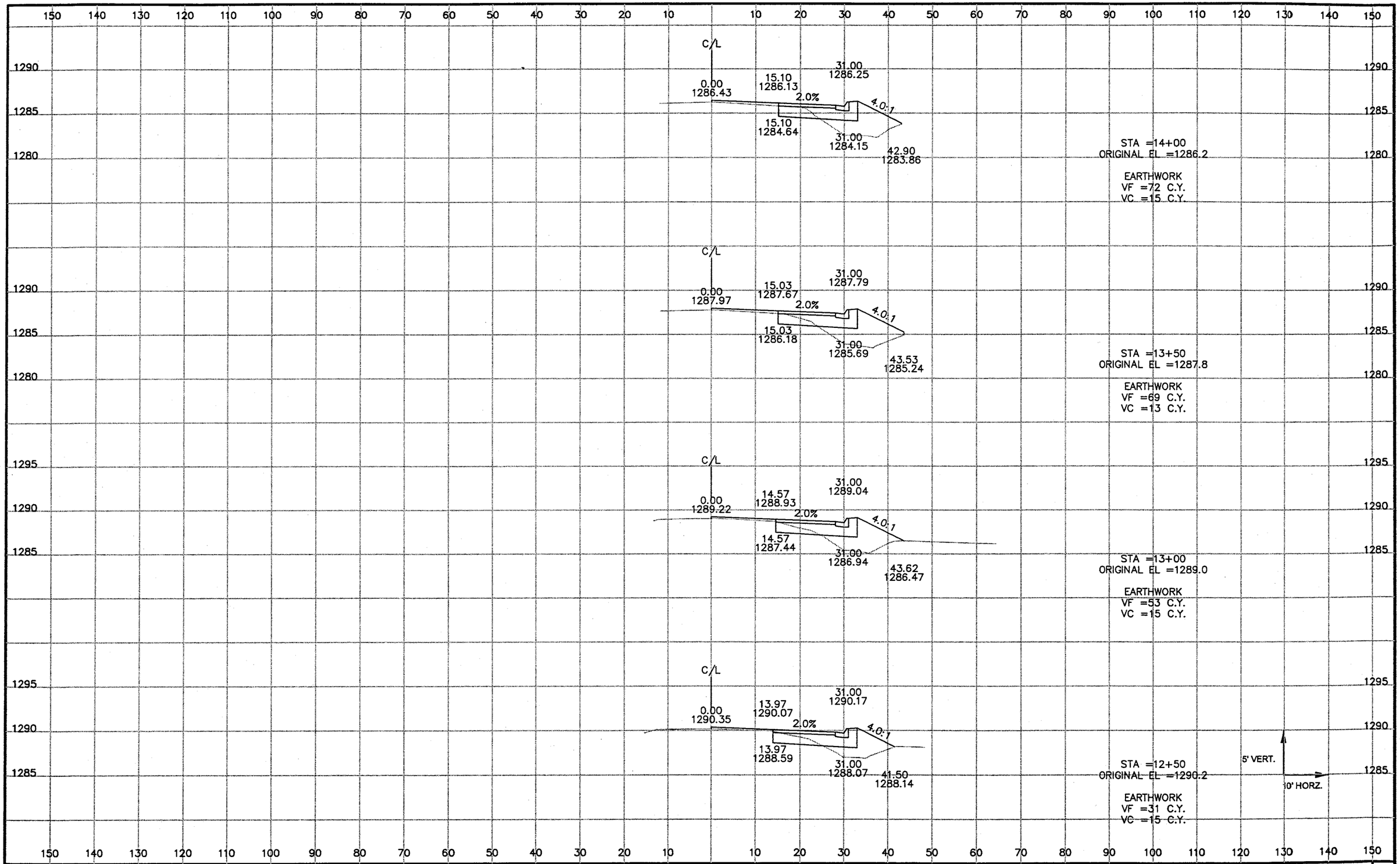

009002

P:\draft\28940100 cth n west arterialltopo survey\rc013002.dwg, Layout1, 2/17/2004 5:04:08 PM

STATE PROJECT NUMBER: 6651-01-00	HWY: CTH N	COUNTY: MARATHON	CROSS SECTIONS: CTH KK	SHEET NO: 9.55	E

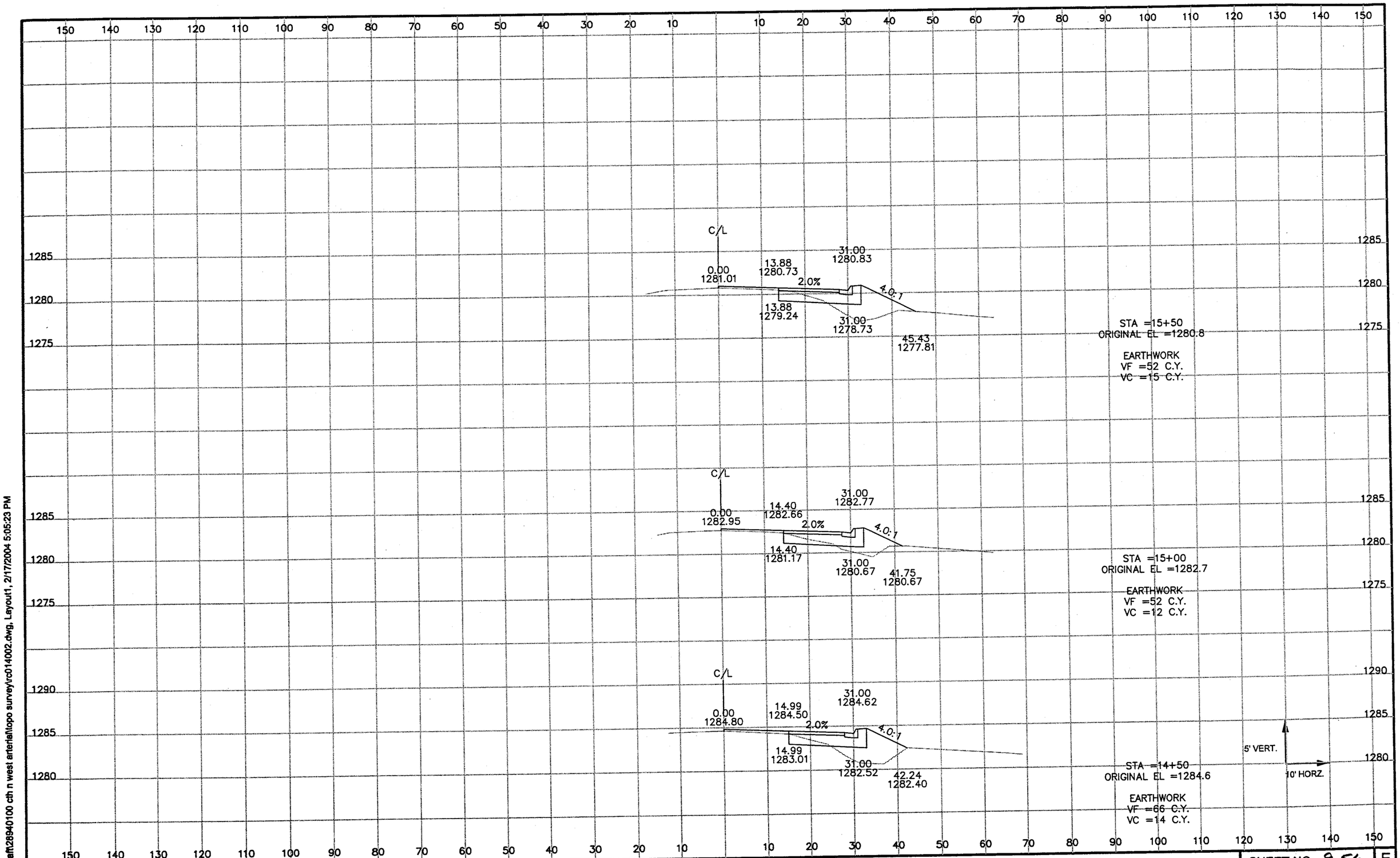

P:\draft\28940100 cth n west arterial\topo survey\rc0114002.dwg, Layout1, 2/17/2004 5:05:23 PM

STATE PROJECT NUMBER: 6651-01-00	HWY: CTH N	COUNTY: MARATHON	CROSS SECTIONS: CTH KK	SHEET NO: 9.56	E

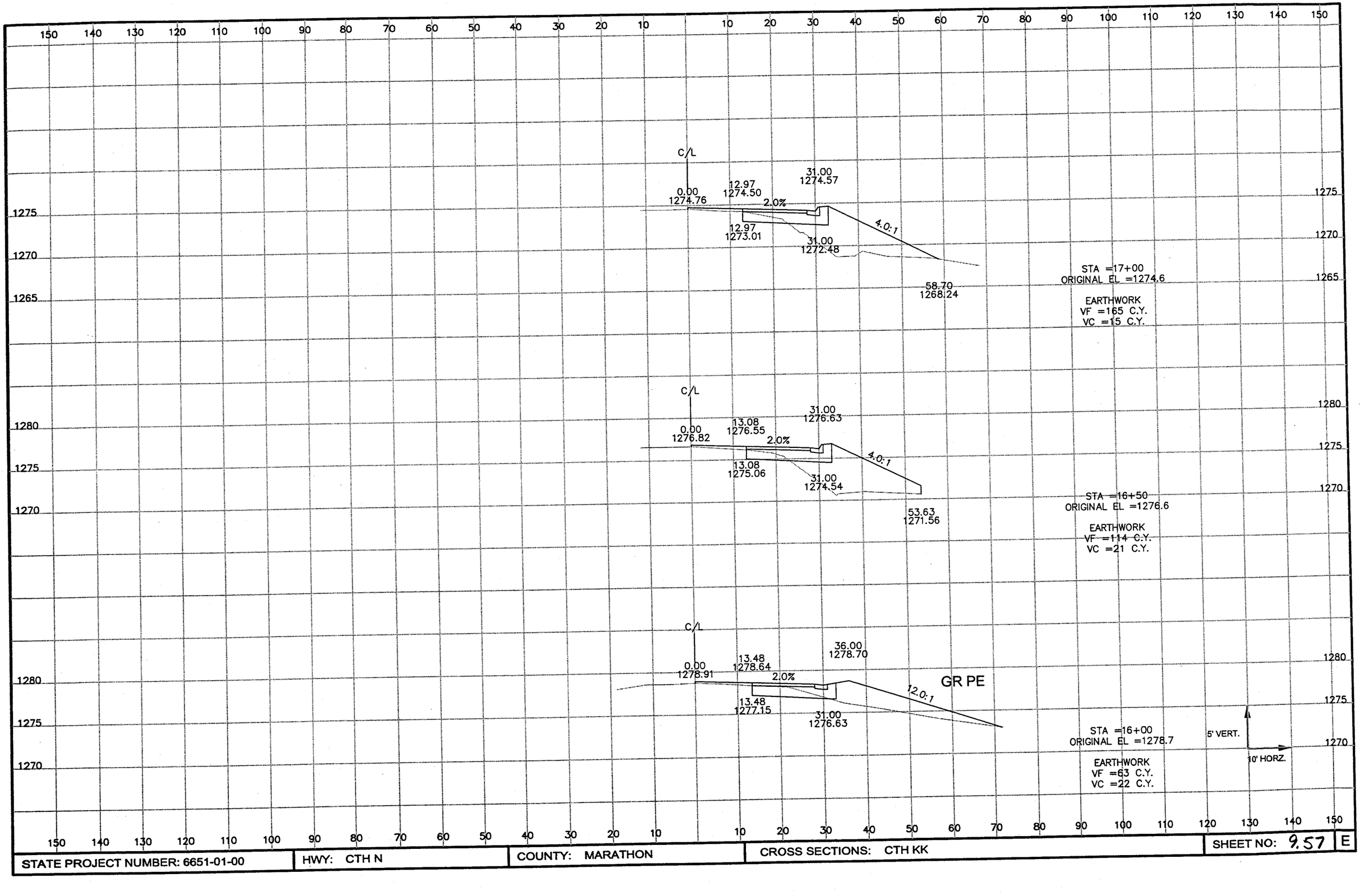

P:\draft\28940100 cth n west arterial\topo survey\rcd15002.dwg, Layout1, 2/17/2004 5:08:04 PM

STATE PROJECT NUMBER: 6651-01-00	HWY: CTH N	COUNTY: MARATHON	CROSS SECTIONS: CTH KK	SHEET NO: 9.57	E

P:\draft\28940100 cth n west arterial\topo survey\rc011002.dwg, Layout1, 2/20/2004 12:34:07 PM

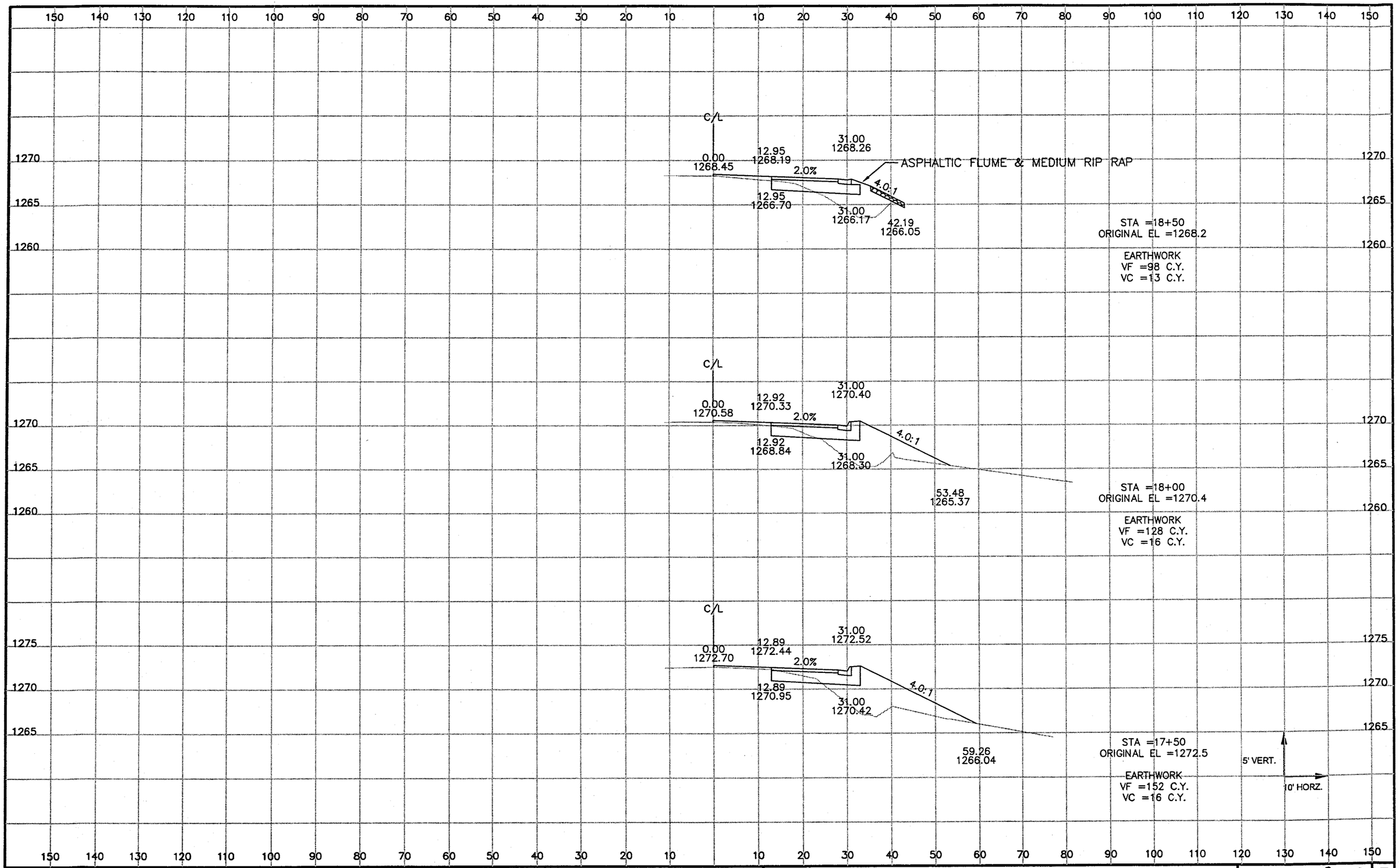

STATE PROJECT NUMBER: 6651-01-00	HWY: CTH N	COUNTY: MARATHON	CROSS SECTIONS: CTH KK	SHEET NO: 9.58	E

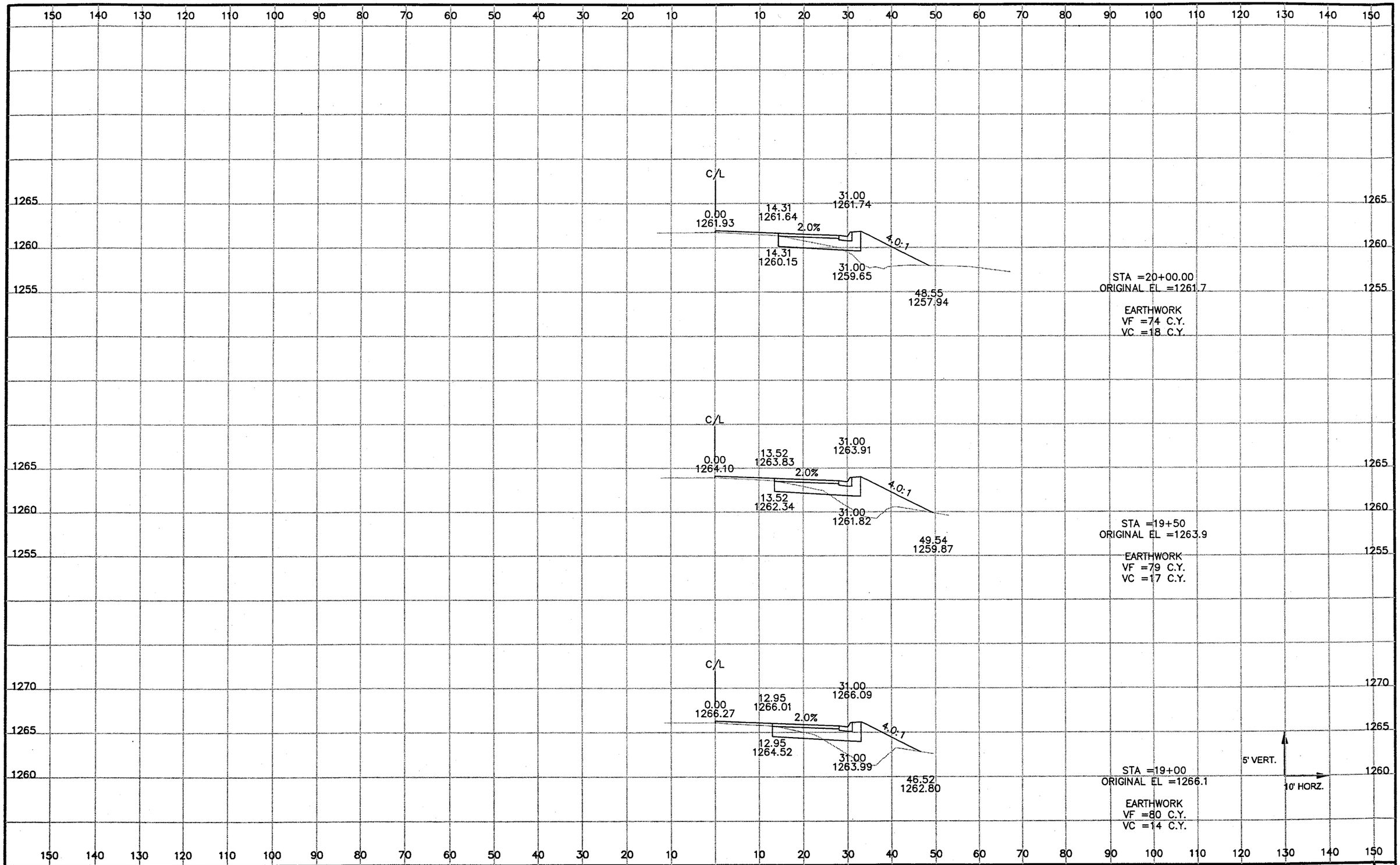

P:\draft\28940100 cth n west arterial\topo survey\rc017002.dwg, Layout1, 2/17/2004 5:13:22 PM

STATE PROJECT NUMBER: 6651-01-00	HWY: CTH N	COUNTY: MARATHON	CROSS SECTIONS: CTH KK	SHEET NO: 9.59	E

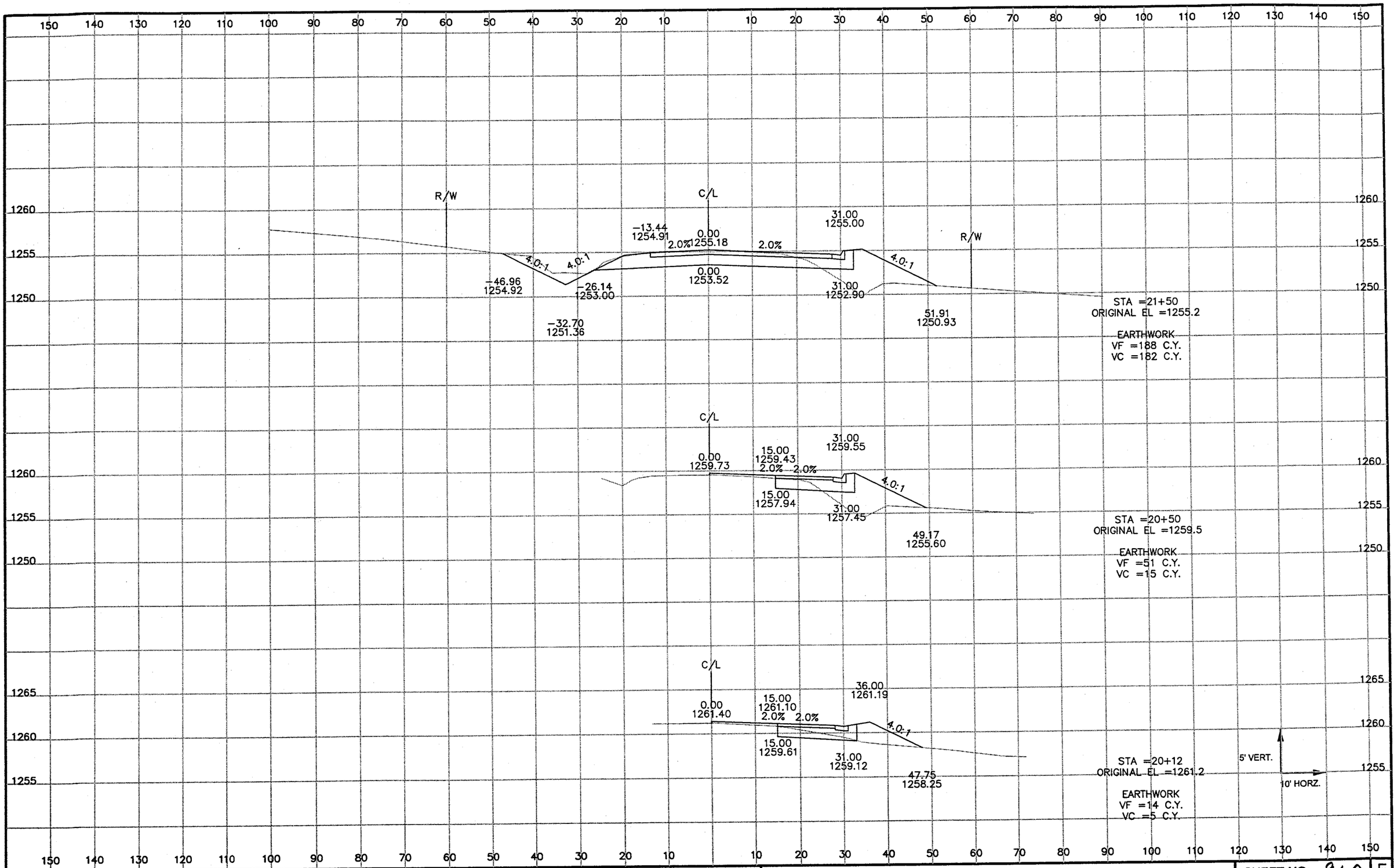

P:\draft\28940100 cth n west arterial\topo survey\rc017002.dwg, Layout1, 2/18/2004 9:00:03 AM

STATE PROJECT NUMBER: 6651-01-00	HWY: CTH N	COUNTY: MARATHON	CROSS SECTIONS: CTH KK	SHEET NO: 9.60	E

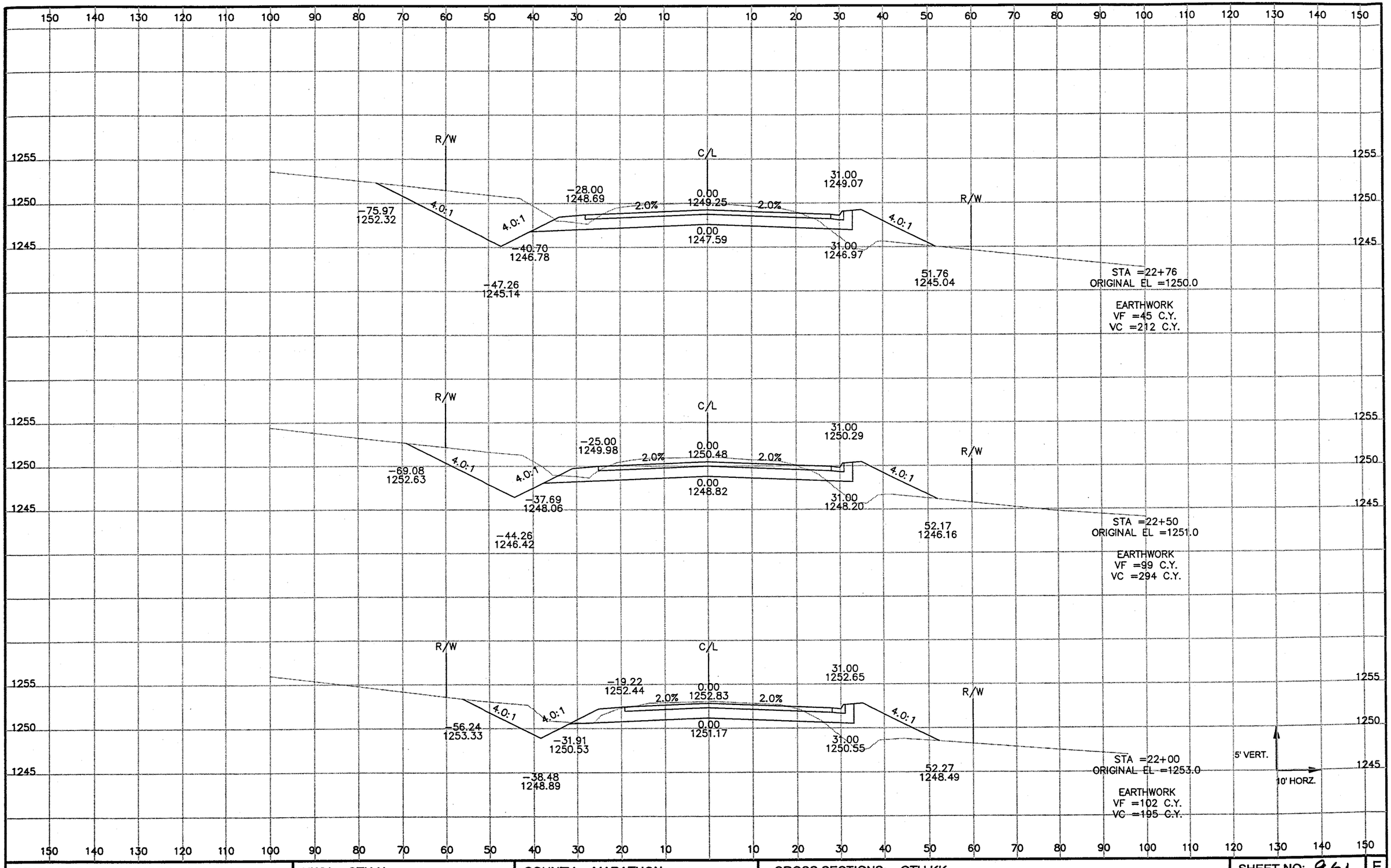

P:\draft\28940100 cth n west arterial\topo survey\rc018002.dwg, Layout1, 2/18/2004 10:04:28 AM

STATE PROJECT NUMBER: 6651-01-00	HWY: CTH N	COUNTY: MARATHON	CROSS SECTIONS: CTH KK	SHEET NO: 9.61	E

P:\draft\28940100 cth n west arterial\topo survey\rcd018002.dwg, Layout1, 2/20/2004 12:44:44 PM

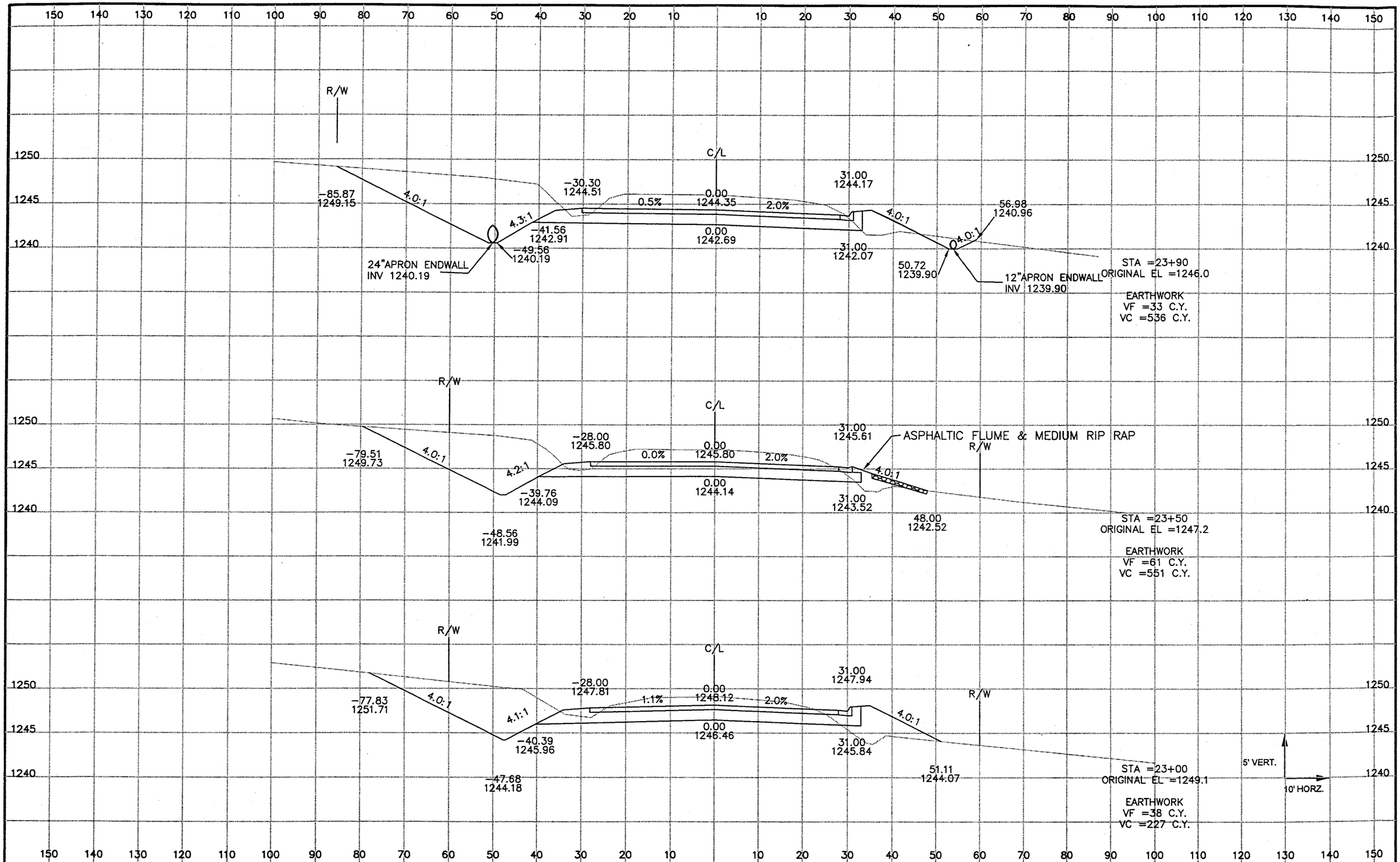

STATE PROJECT NUMBER: 6651-01-00	HWY: CTH N	COUNTY: MARATHON	CROSS SECTIONS: CTH KK	SHEET NO: 9.62	E

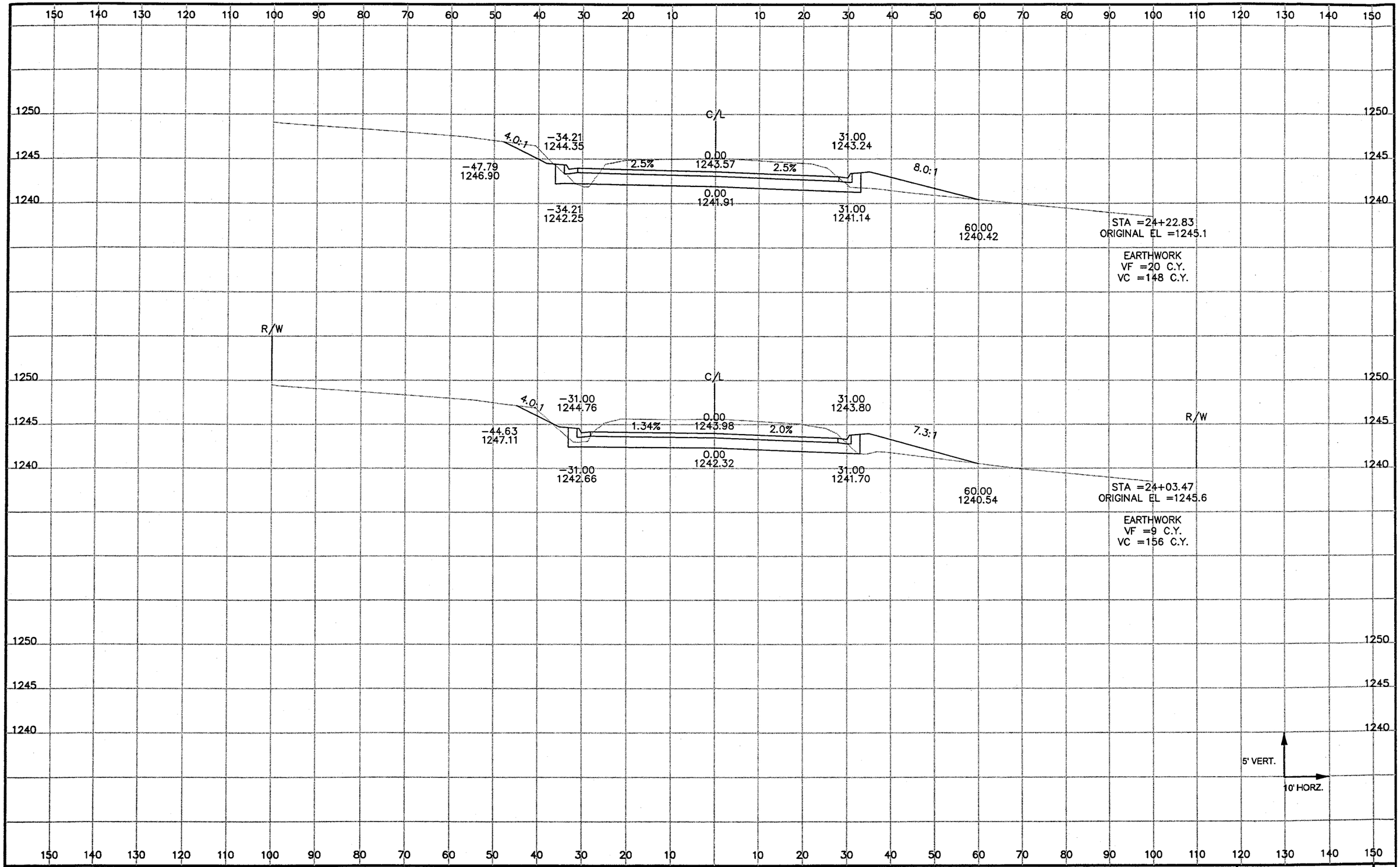

P:\draft\28940100 cth n west arterial\topo survey\rc003002.dwg, Layout1, 2/18/2004 10:59:42 AM

STATE PROJECT NUMBER: 6651-01-00	HWY: CTH N	COUNTY: MARATHON	CROSS SECTIONS: CTH KK, BITTERSWEET ROAD	SHEET NO: 9.63	E

P:\DRAFT\289401\00\CTH N West Arterial\topo survey\r0009002.dwg, Layout1, 10/03/2003 02:23:32 PM

R/W

C/L

-18.00
1243.77

10.8:1

0.00
1243.32

21.04
1243.33

-25.00
1244.16

2.5%

2.0%

VAR%

0.00
1241.66

-18.00
1241.38

21.04
1241.24

R/W

STA =25+79.42
ORIGINAL EL =1243.3

EARTHWORK
VF =28 C.Y.
VC =59 C.Y.

-56.61
1245.97

C/L

0.00
1243.11

75.23
1239.32

5.1%

-56.61
1244.30

0.00
1241.44

5.0%

STA =25+38
ORIGINAL EL =1243.8

75.23
1237.65

EARTHWORK
VF =0 C.Y.
VC =0 C.Y.

CTH N

-74.81
1246.83

56.50
1245.94

C/L

0.00
1243.11

59.88
1240.13

5.0%

-74.81
1245.16

-56.50
1244.27

0.00
1241.44

5.0%

59.88
1238.46

STA =24+62
ORIGINAL EL =1244.4

EARTHWORK
VF =20 C.Y.
VC =151 C.Y.

5' VERT.

10' HORZ.

STATE PROJECT NUMBER: 6651-01-00	HWY: CTH N	COUNTY: MARATHON	CROSS SECTIONS: CTH KK, BITTERSWEET ROAD	SHEET NO: 9.64	E

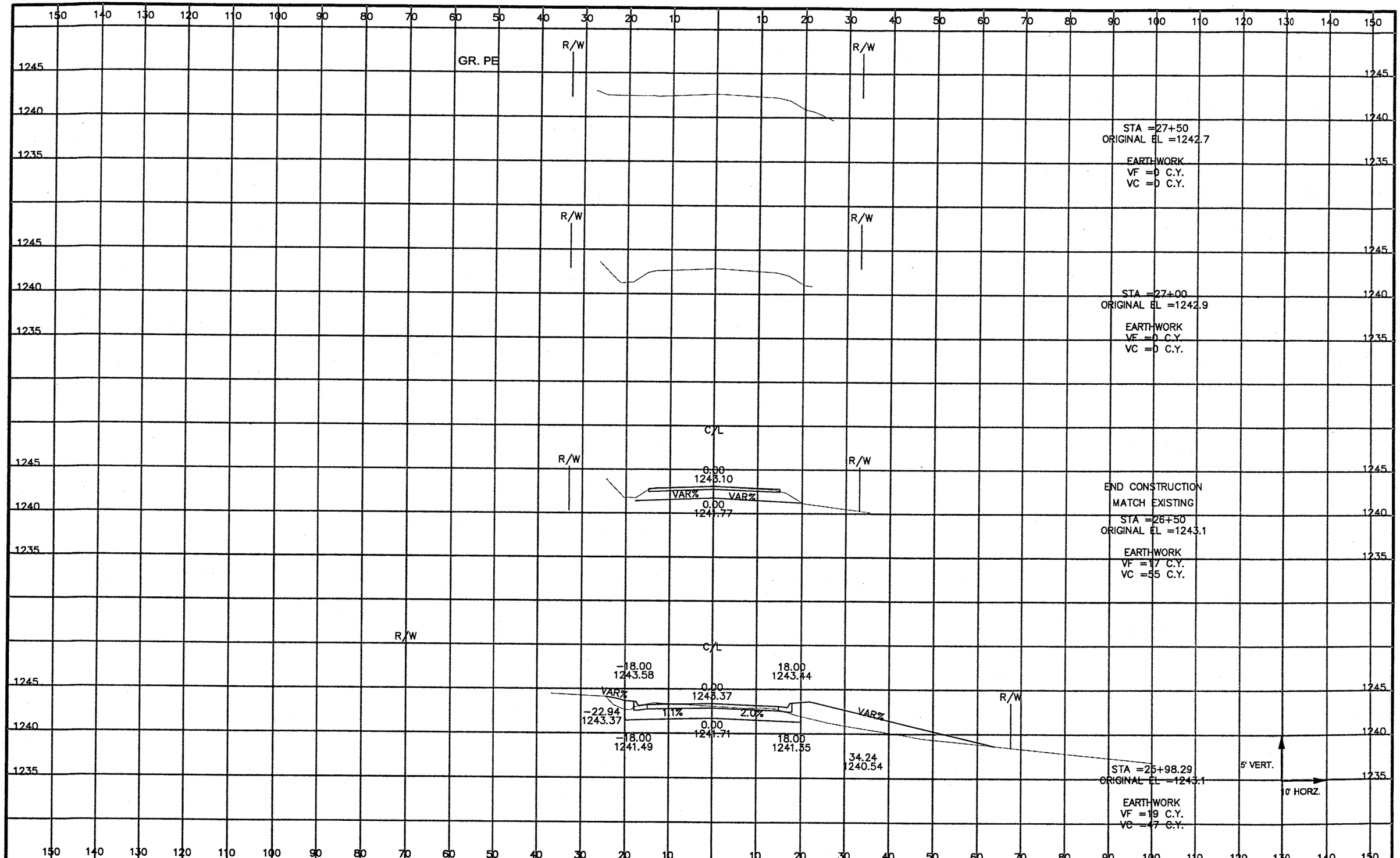

STATE PROJECT NUMBER: 6651-01-00	HWY: CTH N	COUNTY: MARATHON	CROSS SECTIONS: BITTERSWEET ROAD	SHEET NO: 9.65	E

P:\DRAFT\28940100 CTH N West Arterial\topo survey\c010002.dwg, Layout1, 10/03/2003 02:24:20 PM

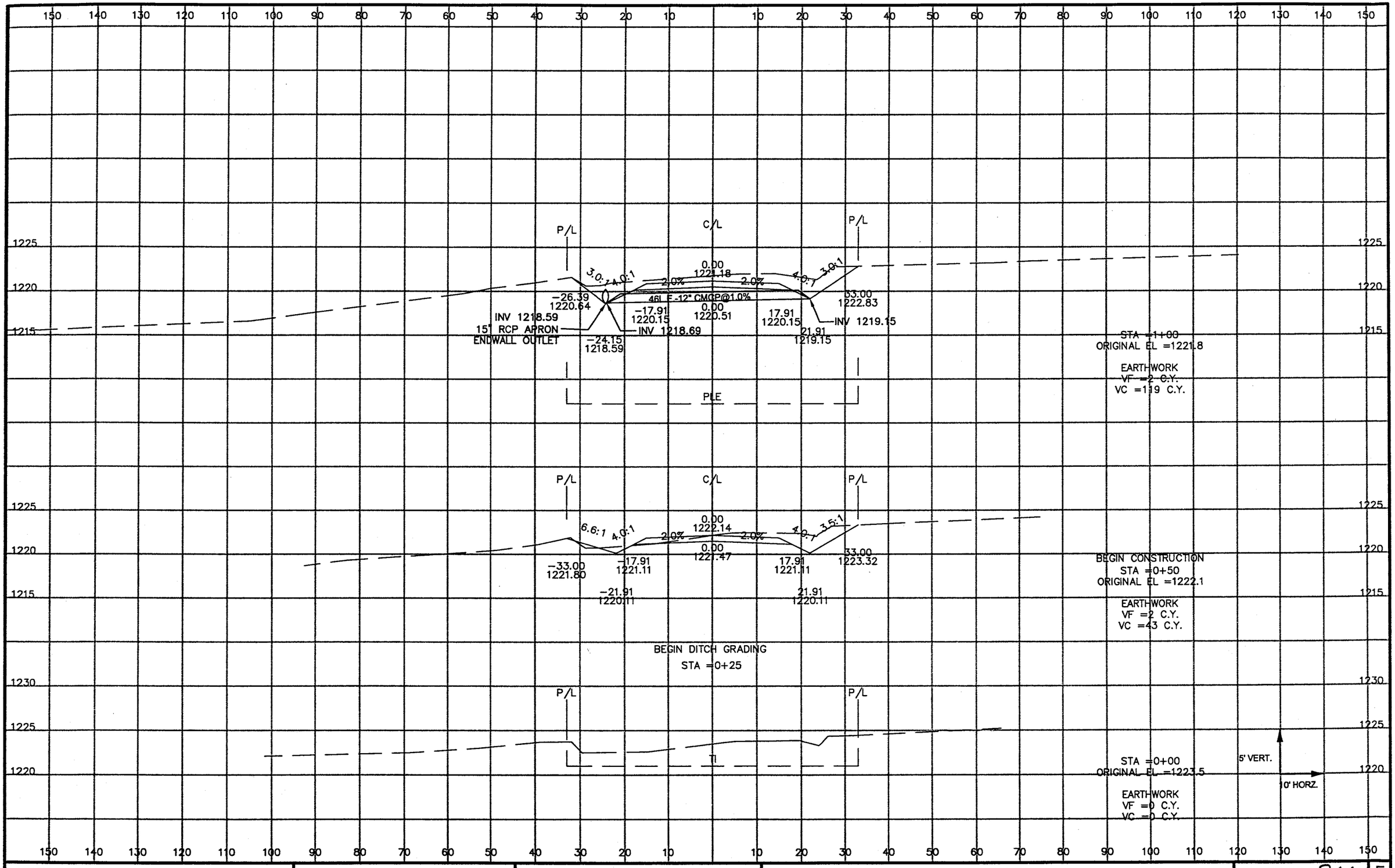

P:\DRAFT\28940100 CTH N West Arterial\topo survey\rc002003.dwg, Layout1, 10/03/2003 02:36:37 PM

STATE PROJECT NUMBER: 6651-01-00	HWY: CTH N	COUNTY: MARATHON	CROSS SECTIONS: MAGNOLIA AVENUE	SHEET NO: 9.66	E

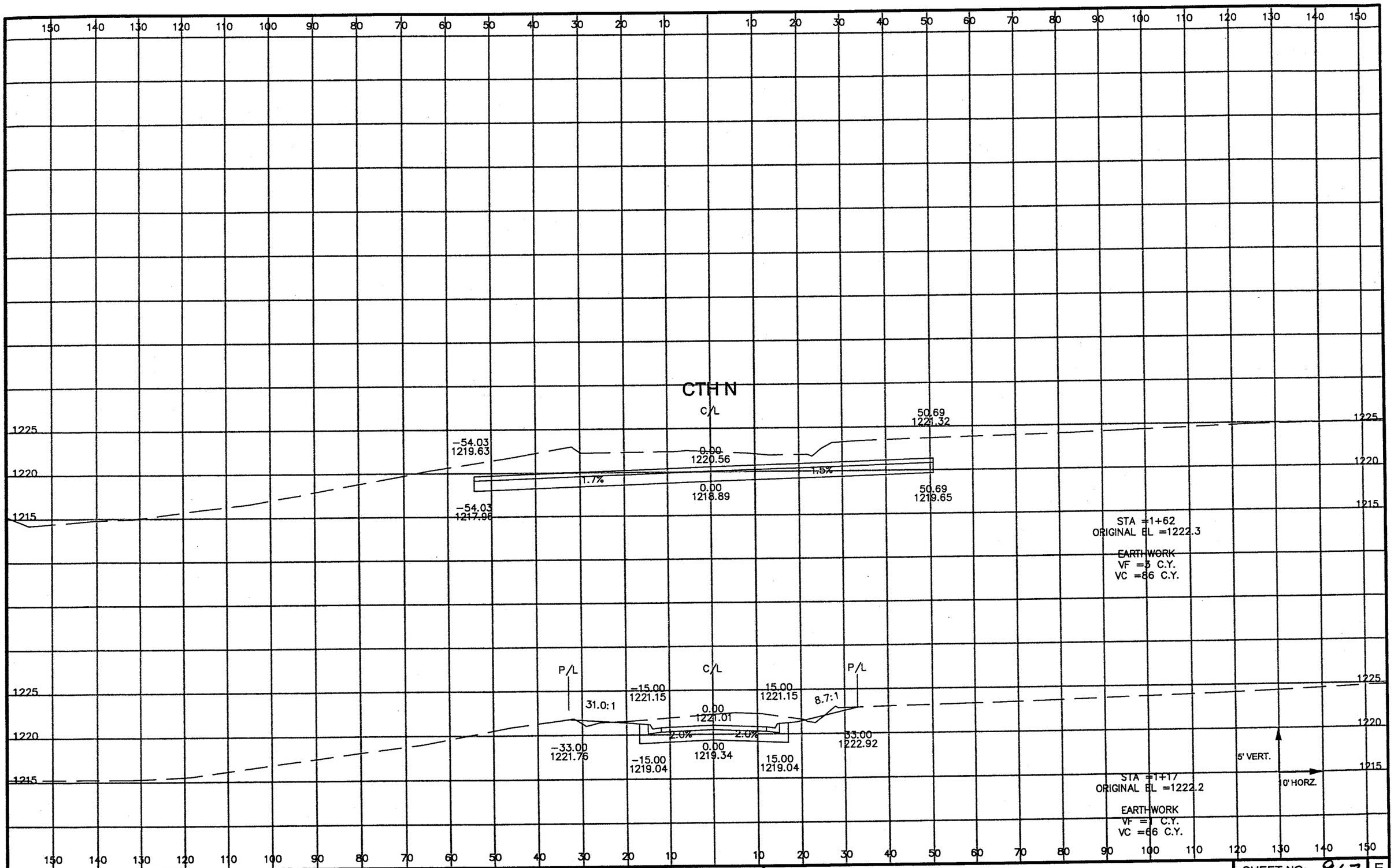

STATE PROJECT NUMBER: 6651-01-00	HWY: CTH N	COUNTY: MARATHON	CROSS SECTIONS: MAGNOLIA AVENUE	SHEET NO: 9.67	E

P:\DRAFT\28940100 CTH N West Arterial\topo survey\rc001003.dwg, Layout1, 10/03/2003 02:36:19 PM

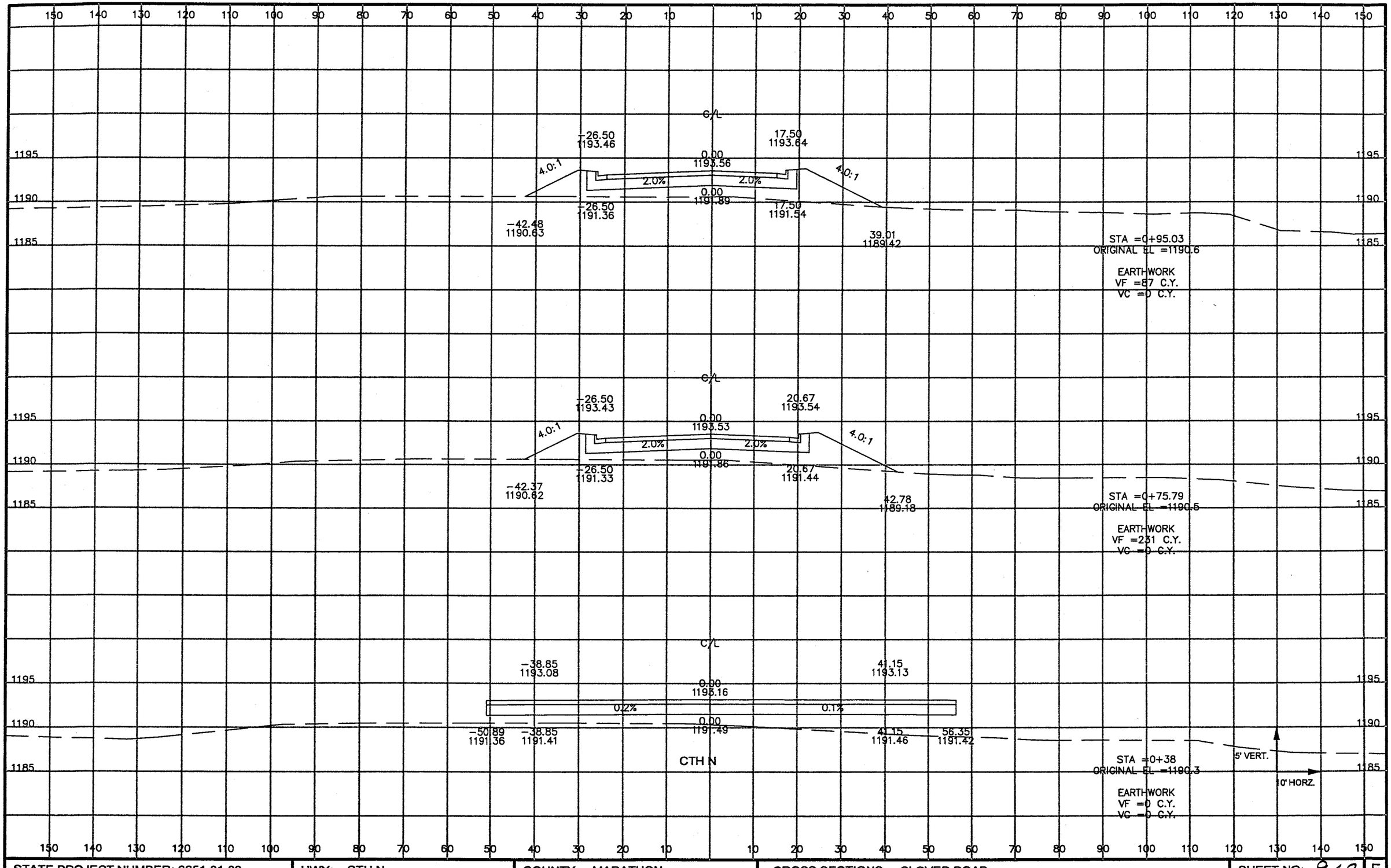

STATE PROJECT NUMBER: 6651-01-00	HWY: CTH N	COUNTY: MARATHON	CROSS SECTIONS: CLOVER ROAD	SHEET NO: 9.68	E

P:\DRAFT\28940100 CTH N West Arterial\topo survey\rc001005.dwg, Layout1, 10/03/2003 02:39:17 PM

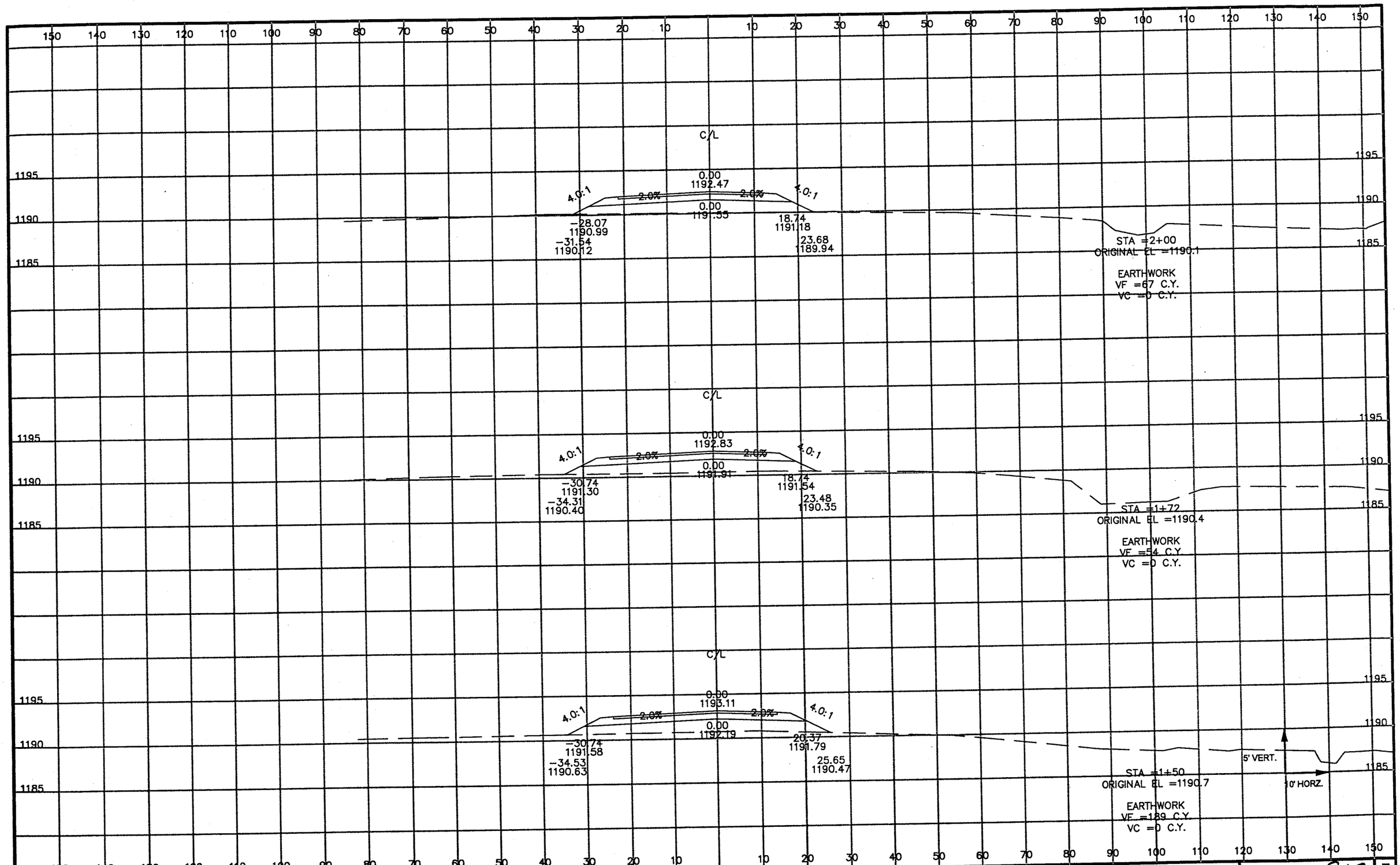

STATE PROJECT NUMBER: 6651-01-00	HWY: CTH N	COUNTY: MARATHON	CROSS SECTIONS: CLOVER ROAD	SHEET NO: 9.69	E

P:\DRAFT\28940100 CTH N West Arterial\topo survey\rc002005.dwg, Layout1, 10/03/2003 02:39:35 PM

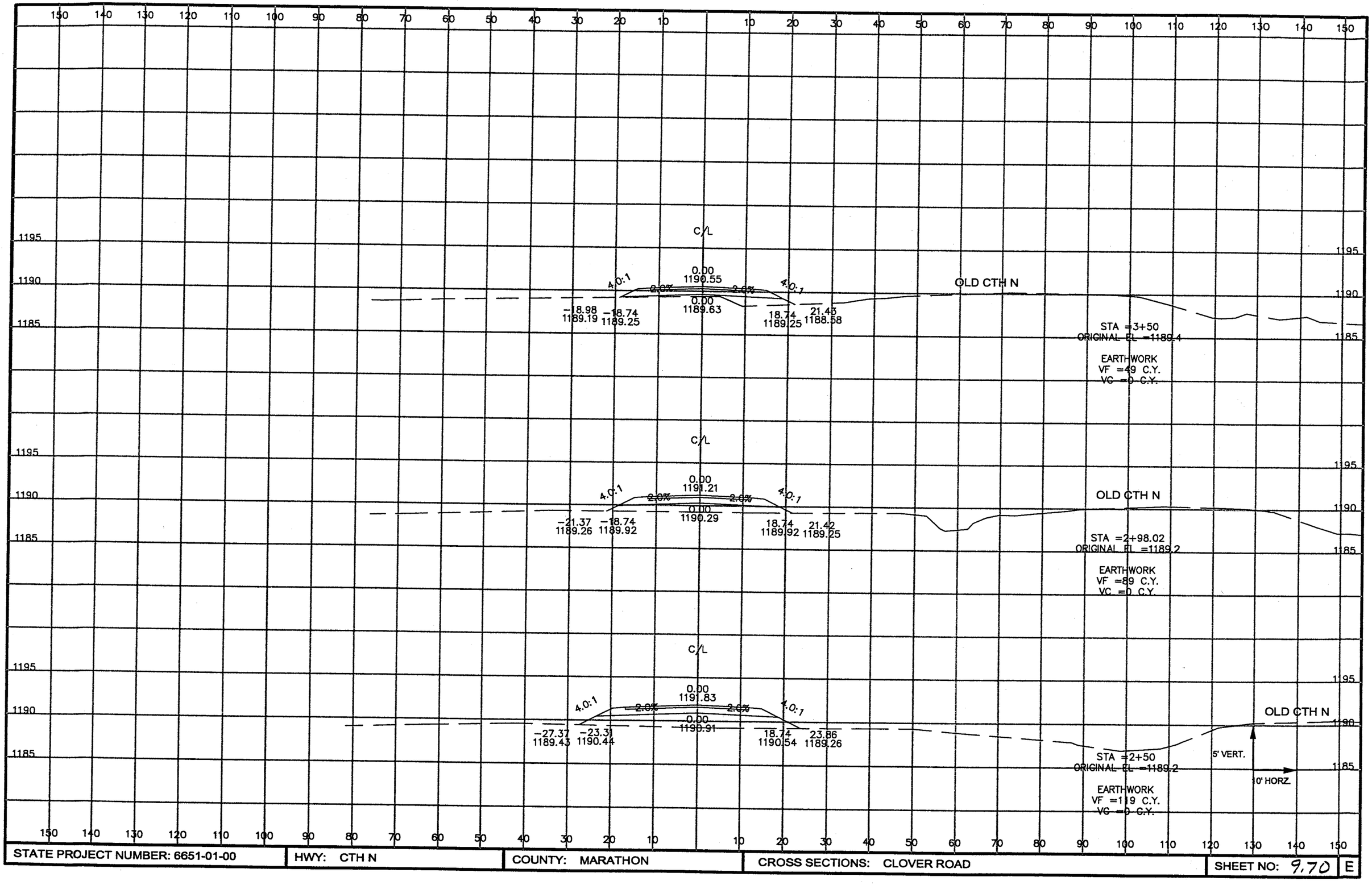

STATE PROJECT NUMBER: 6651-01-00	HWY: CTH N	COUNTY: MARATHON	CROSS SECTIONS: CLOVER ROAD	SHEET NO: 9,70	E

P:\DRAFT\28940100 CTH N West Arterial\topo survey\rc003005.dwg, Layout1, 10/03/2003 02:39:50 PM

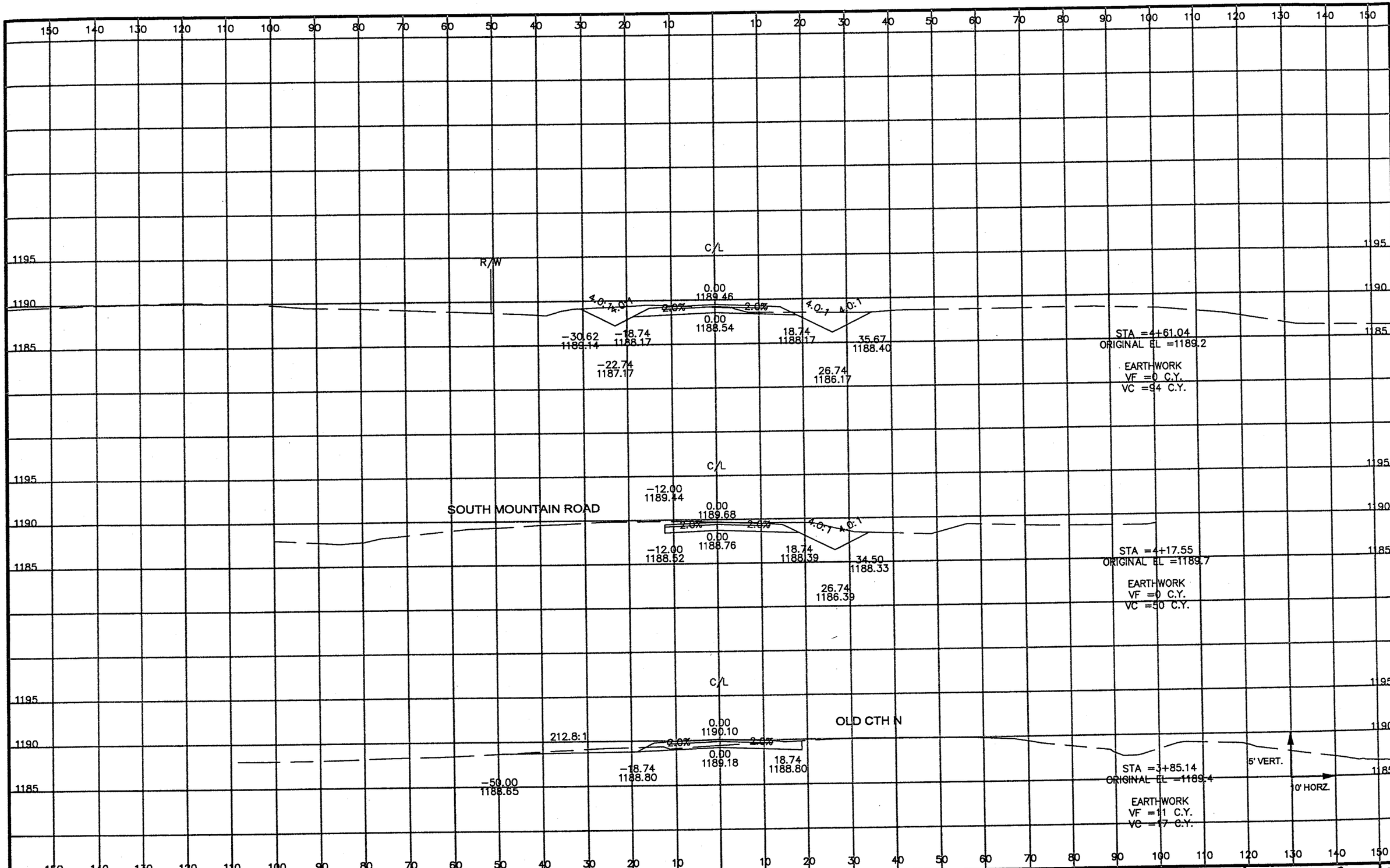

STATE PROJECT NUMBER: 6651-01-00	HWY: CTH N	COUNTY: MARATHON	CROSS SECTIONS: CLOVER ROAD	SHEET NO: 9.71	E

P:\DRAFT\28940100 CTH N West Arterial\topo survey\rc004005.dwg, Layout1, 10/03/2003 02:40:05 PM

P:\DRAFT\28940100 CTH N West Arterial\topo survey\vc005005.dwg, Layout1, 10/03/2003 02:40:24 PM

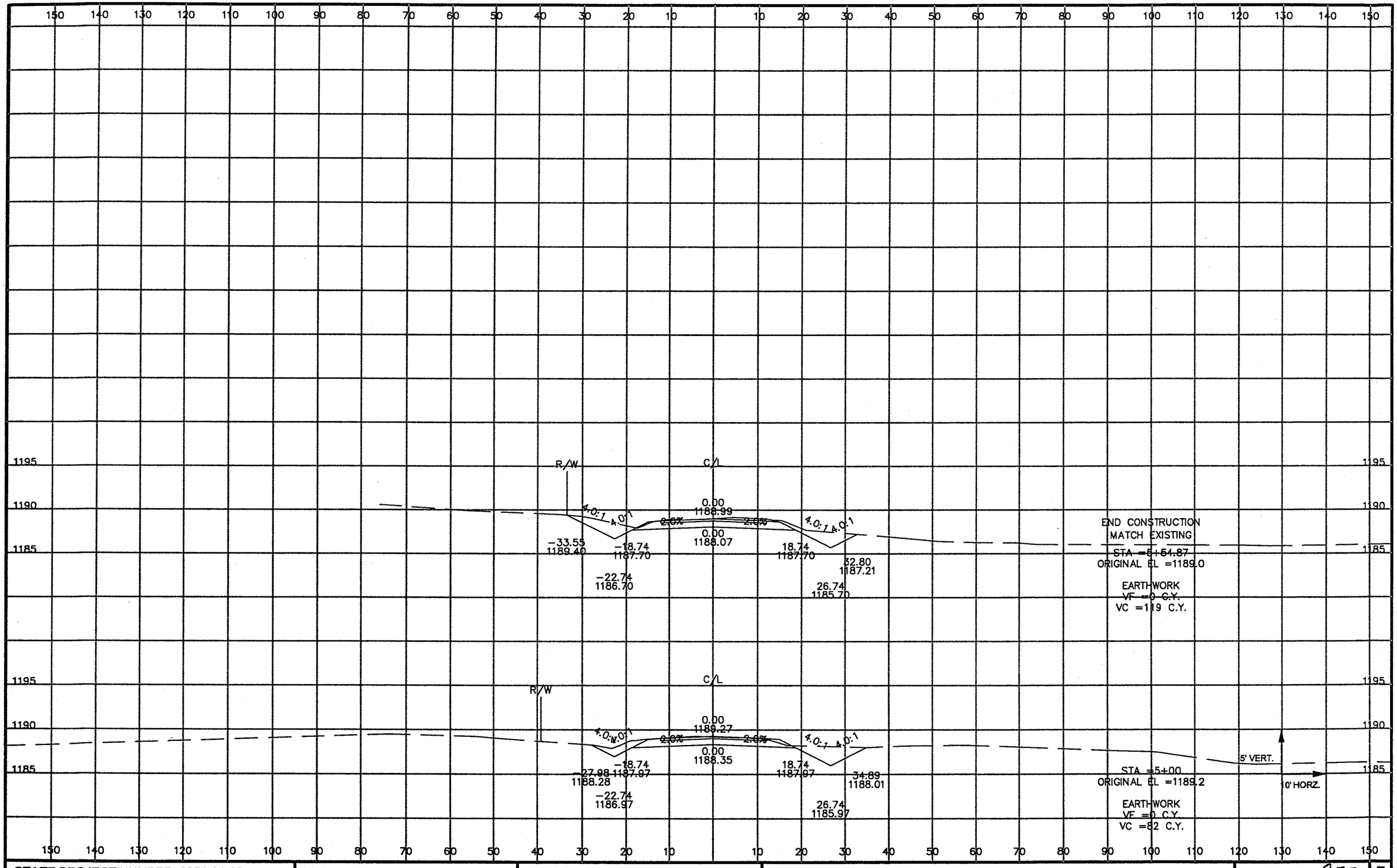

STATE PROJECT NUMBER: 6651-01-00	HWY: CTH N	COUNTY: MARATHON	CROSS SECTIONS: CLOVER ROAD	SHEET NO: 9.72	E

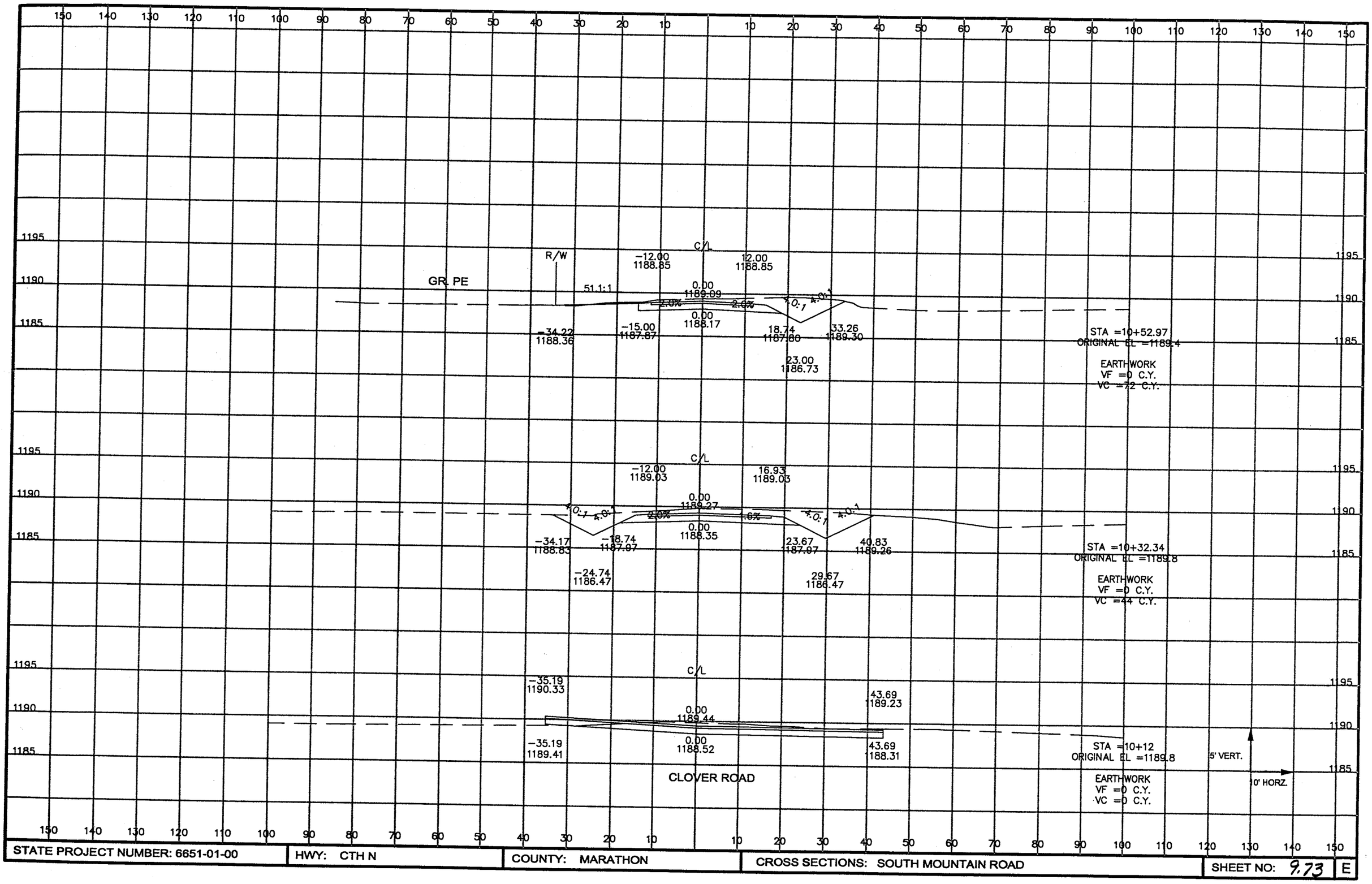

P:\DRAFT\28940100 CTH N West Arterial\topo survey\rc001006.dwg, Layout1, 10/03/2003 02:43:22 PM

STATE PROJECT NUMBER: 6651-01-00	HWY: CTH N	COUNTY: MARATHON	CROSS SECTIONS: SOUTH MOUNTAIN ROAD	SHEET NO: 9.73	E

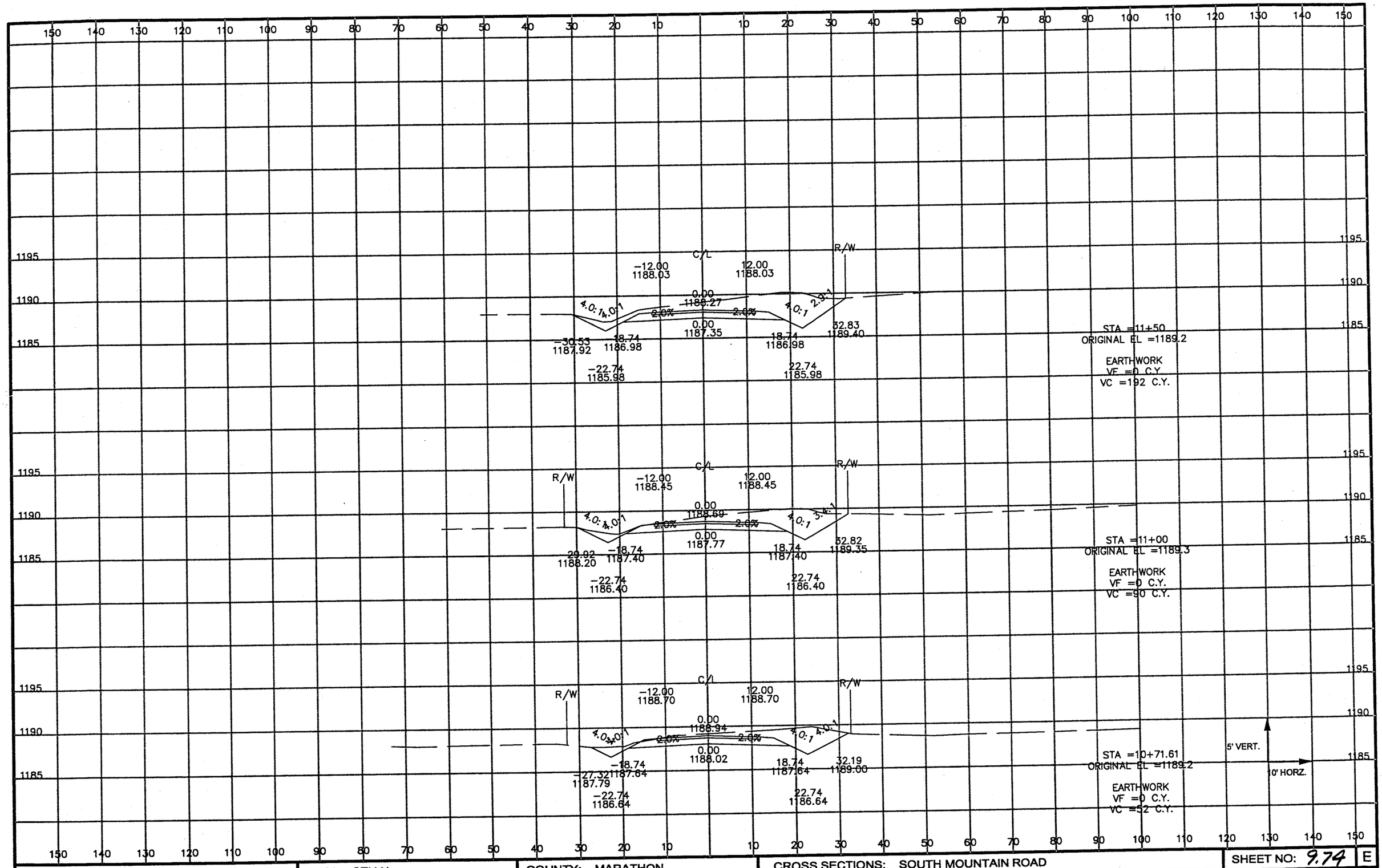

P:\DRAFT\28940100 CTH N West Arterial\topo survey\rc002008.dwg, Layout1, 10/03/2003 02:43:41 PM

STATE PROJECT NUMBER: 6651-01-00	HWY: CTH N	COUNTY: MARATHON	CROSS SECTIONS: SOUTH MOUNTAIN ROAD	SHEET NO: 9.74	E

P:\DRAFT\28940100 CTH N West Arterial\lopo survey\rc003008.dwg, Layout1, 10/03/2003 02:44:01 PM

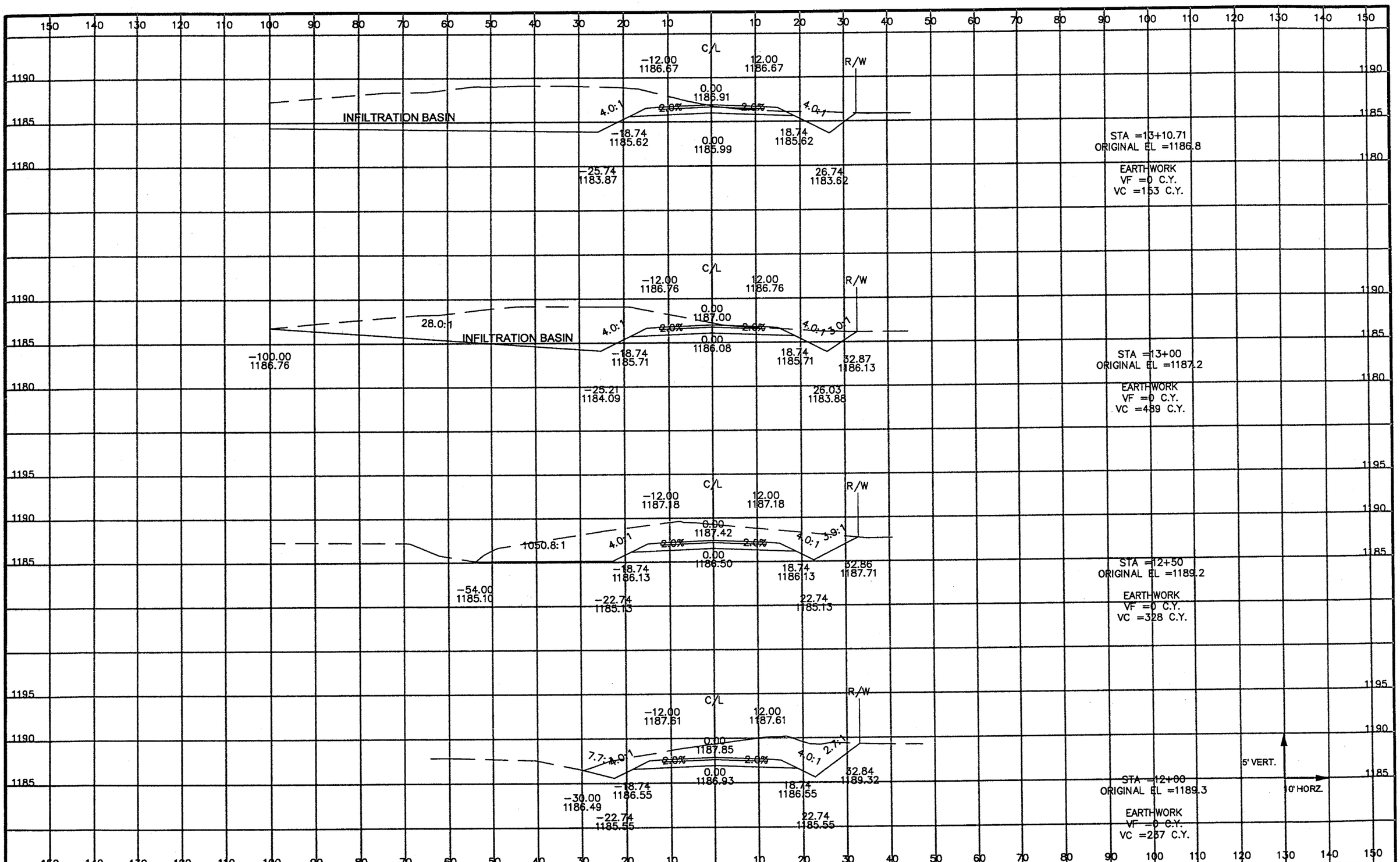

STATE PROJECT NUMBER: 6651-01-00	HWY: CTH N	COUNTY: MARATHON	CROSS SECTIONS: SOUTH MOUNTAIN ROAD	SHEET NO: 9.75	E

P:\DRAFT\28940100 CTH N West Arterial\topo survey\rc004008.dwg, Layout1, 10/03/2003 02:44:18 PM

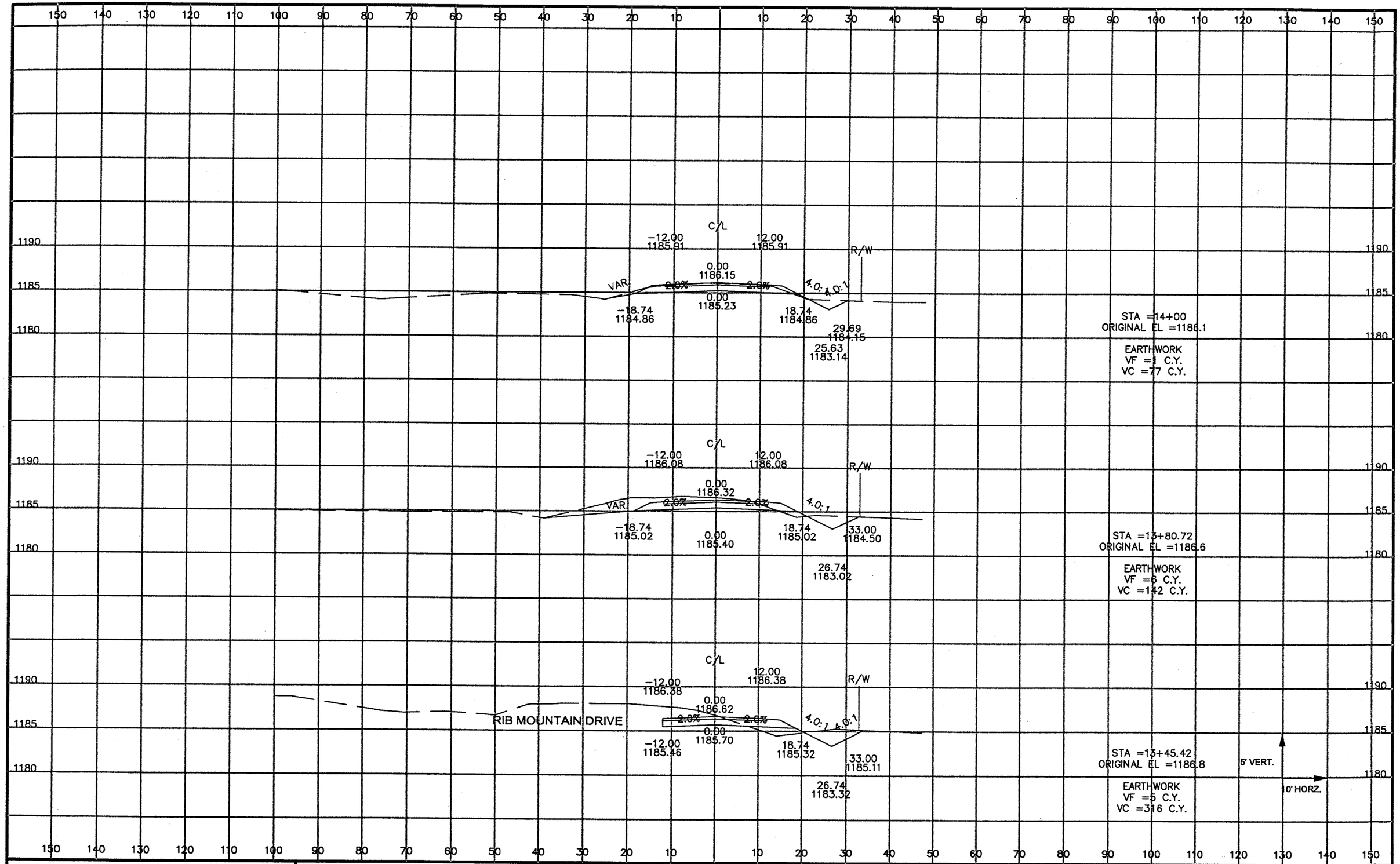

STATE PROJECT NUMBER: 6651-01-00	HWY: CTH N	COUNTY: MARATHON	CROSS SECTIONS: SOUTH MOUNTAIN ROAD	SHEET NO: 9.76	E

P:\DRAFT\28940100 CTH N West Arterial\topo survey\rc005006.dwg, Layout1, 10/03/2003 02:44:34 PM

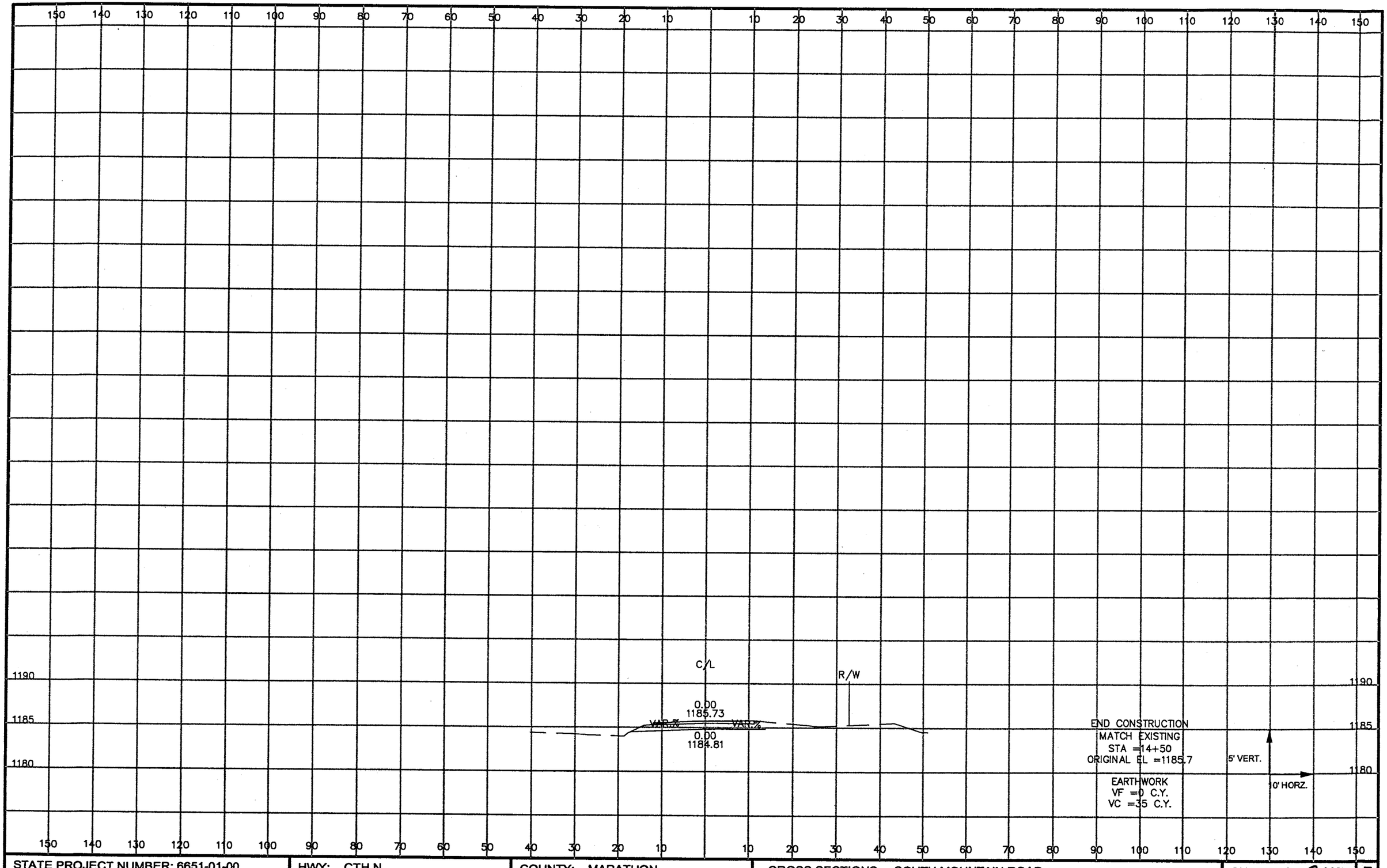

STATE PROJECT NUMBER: 6651-01-00	HWY: CTH N	COUNTY: MARATHON	CROSS SECTIONS: SOUTH MOUNTAIN ROAD	SHEET NO: 9.77	E

P:\DRAFT\28940100 CTH N West Arterial\topo survey\vrc001007.dwg, Layout1, 10/03/2003 02:47:59 PM

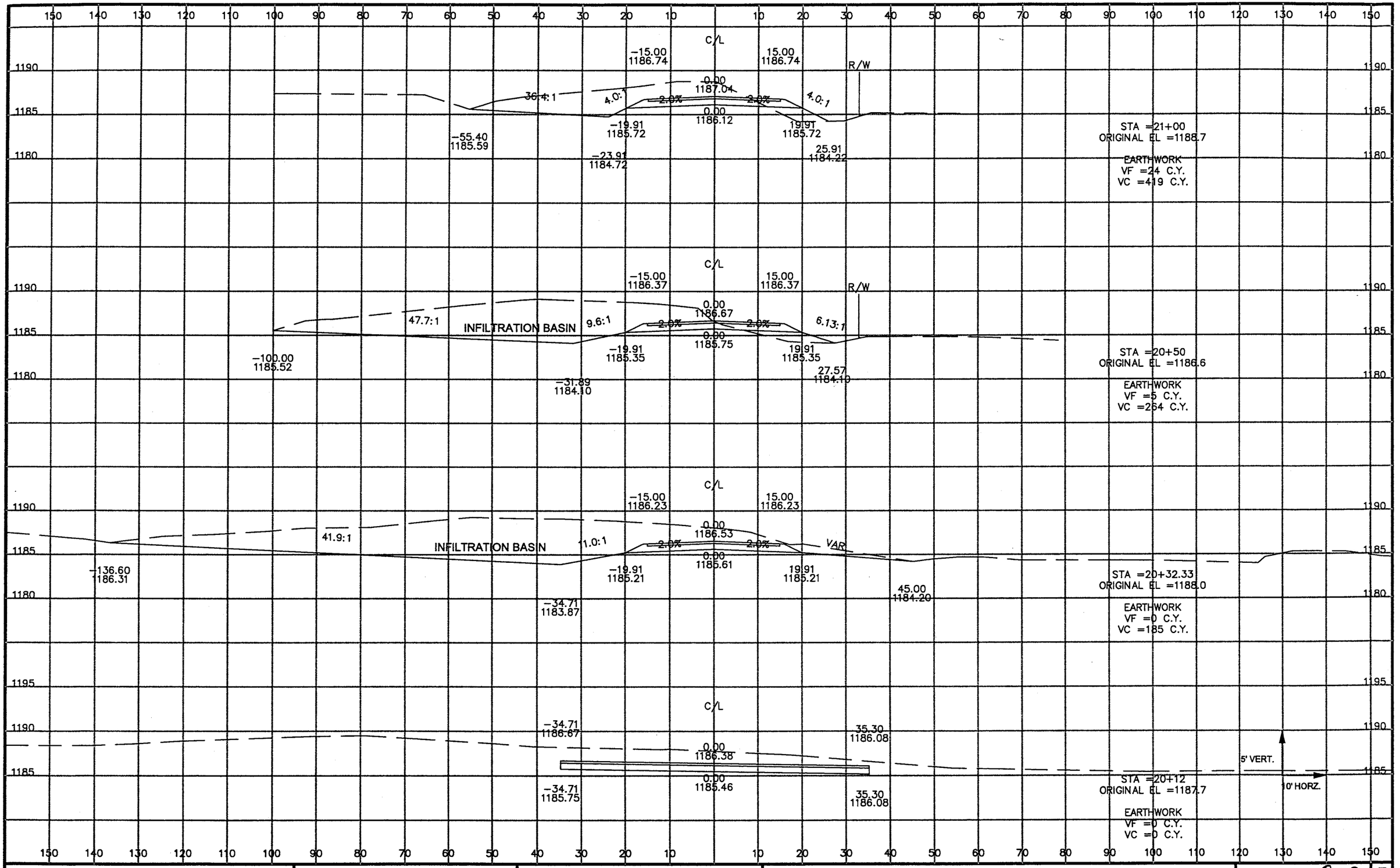

STATE PROJECT NUMBER: 6651-01-00	HWY: CTH N	COUNTY: MARATHON	CROSS SECTIONS: RIB MOUNTAIN DRIVE	SHEET NO: 9.78	E

P:\DRAFT\28940100 CTH N West Arterial\topo survey\rc002007.dwg, Layout1, 10/03/2003 02:48:15 PM

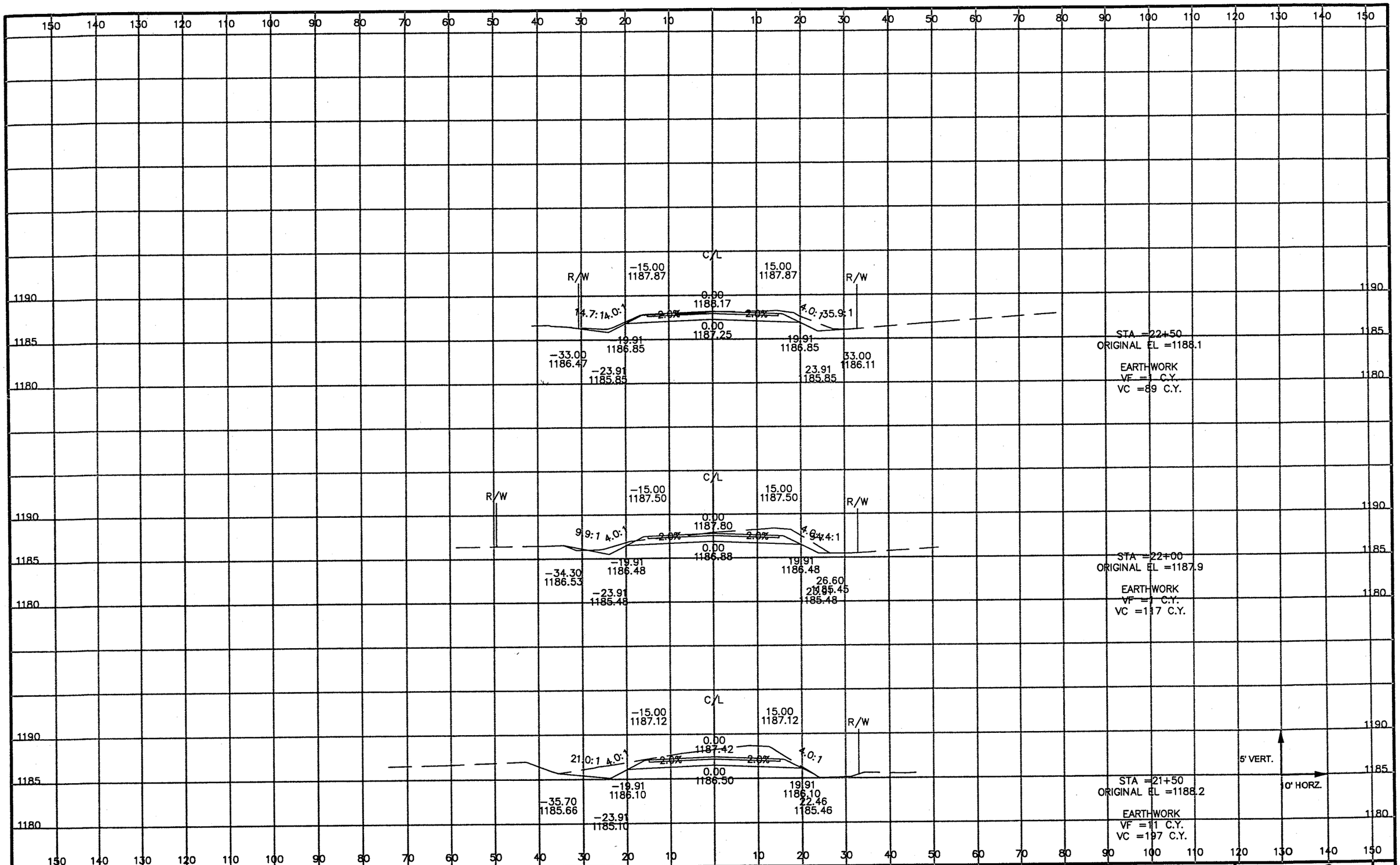

STATE PROJECT NUMBER: 6651-01-00	HWY: CTH N	COUNTY: MARATHON	CROSS SECTIONS: RIB MOUNTAIN DRIVE	SHEET NO: 9.79	E

P:\DRAFT\28940100 CTH N West Arterial\topo survey\rc003007.dwg, Layout1, 10/03/2003 02:48:32 PM

150 140 130 120 110 100 90 80 70 60 50 40 30 20 10 | 10 20 30 40 50 60 70 80 90 100 110 120 130 140 150

1195
1190
1185

R/W

R/W

STA =23+50
ORIGINAL EL =1188.6

EARTHWORK
VF =0 C.Y.
VC =0 C.Y.

R/W

R/W

STA =23+00
ORIGINAL EL =1188.4

EARTHWORK
VF =0 C.Y.
VC =0 C.Y.

C/L

R/W

0.00
1188.38

VAR.%

VAR.%

0.00
1187.46

R/W

END CONSTRUCTION
MATCH EXISTING
STA =22+77.71
ORIGINAL EL =1188.4

5' VERT.

10' HORZ.

EARTHWORK
VF =0 C.Y.
VC =23 C.Y.

STATE PROJECT NUMBER: 6651-01-00	HWY: CTH N	COUNTY: MARATHON	CROSS SECTIONS: RIB MOUNTAIN DRIVE	SHEET NO: 9.80	E

P:\DRAFT\2884\0100 CTH N West Arterial\topo survey\rc0001009.dwg, Layout1, 10/07/2003 03:56:09 PM

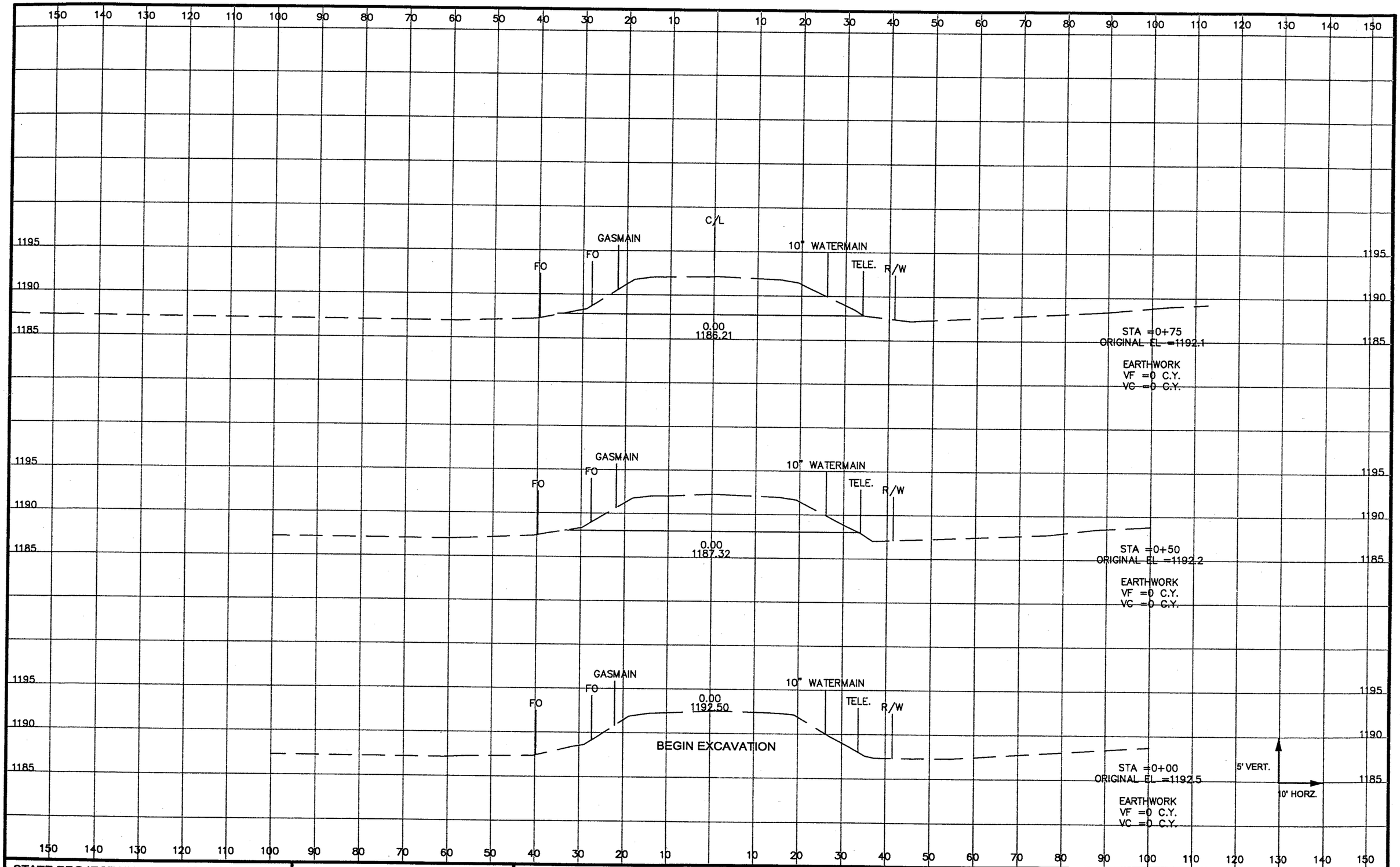

STATE PROJECT NUMBER: 6651-01-00	HWY: CTH N	COUNTY: MARATHON	CROSS SECTIONS: OLD CTH N	SHEET NO: 9.81	E

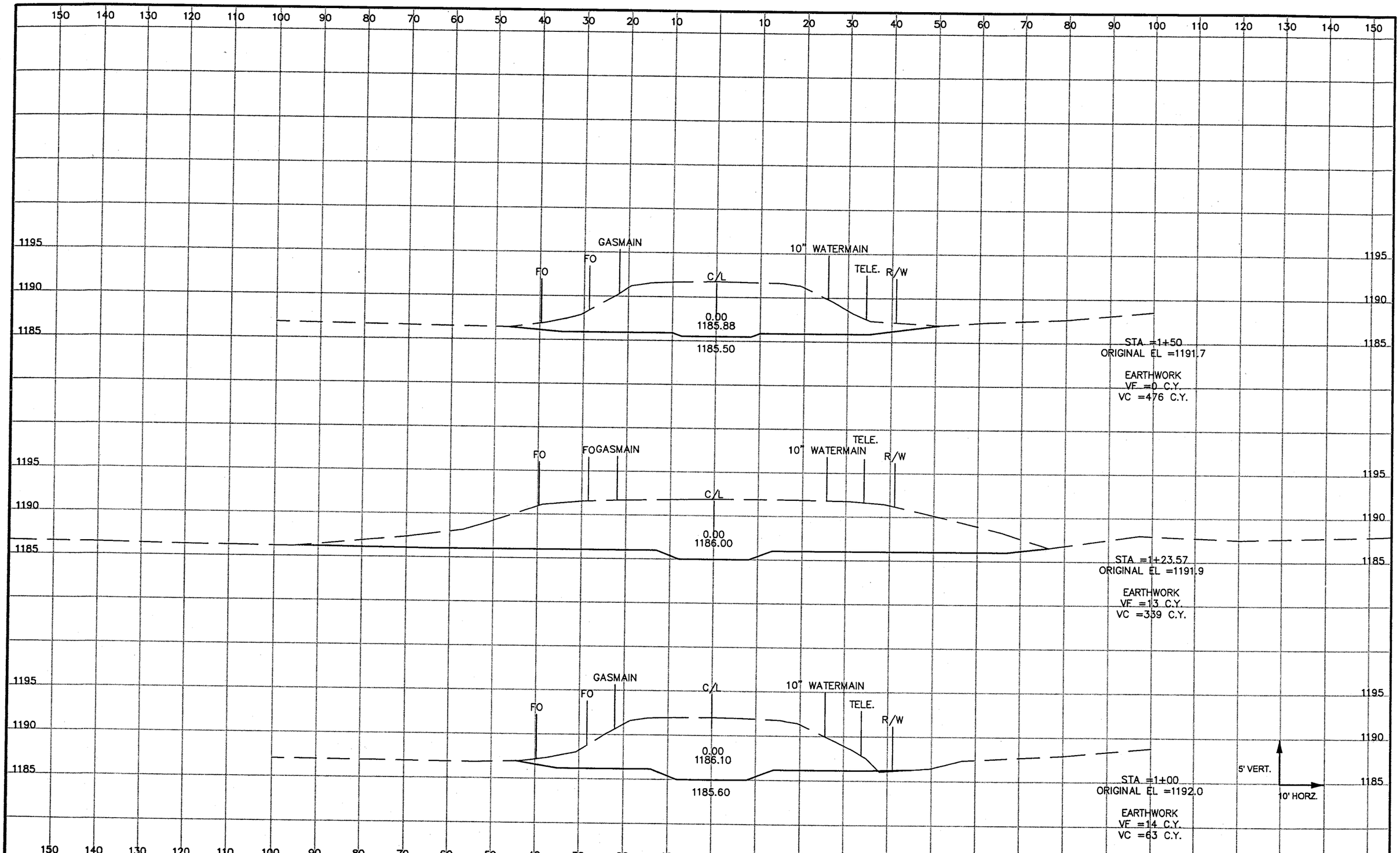

STATE PROJECT NUMBER: 6651-01-00	HWY: CTH N	COUNTY: MARATHON	CROSS SECTIONS: OLD CTH N	SHEET NO: 9.82	E

DRAFT 100 C...\West ...\topo-survey\rc00...dwg, Layout1, 2/12/2004 12:28:55 PM, \\CWEIS...\8000

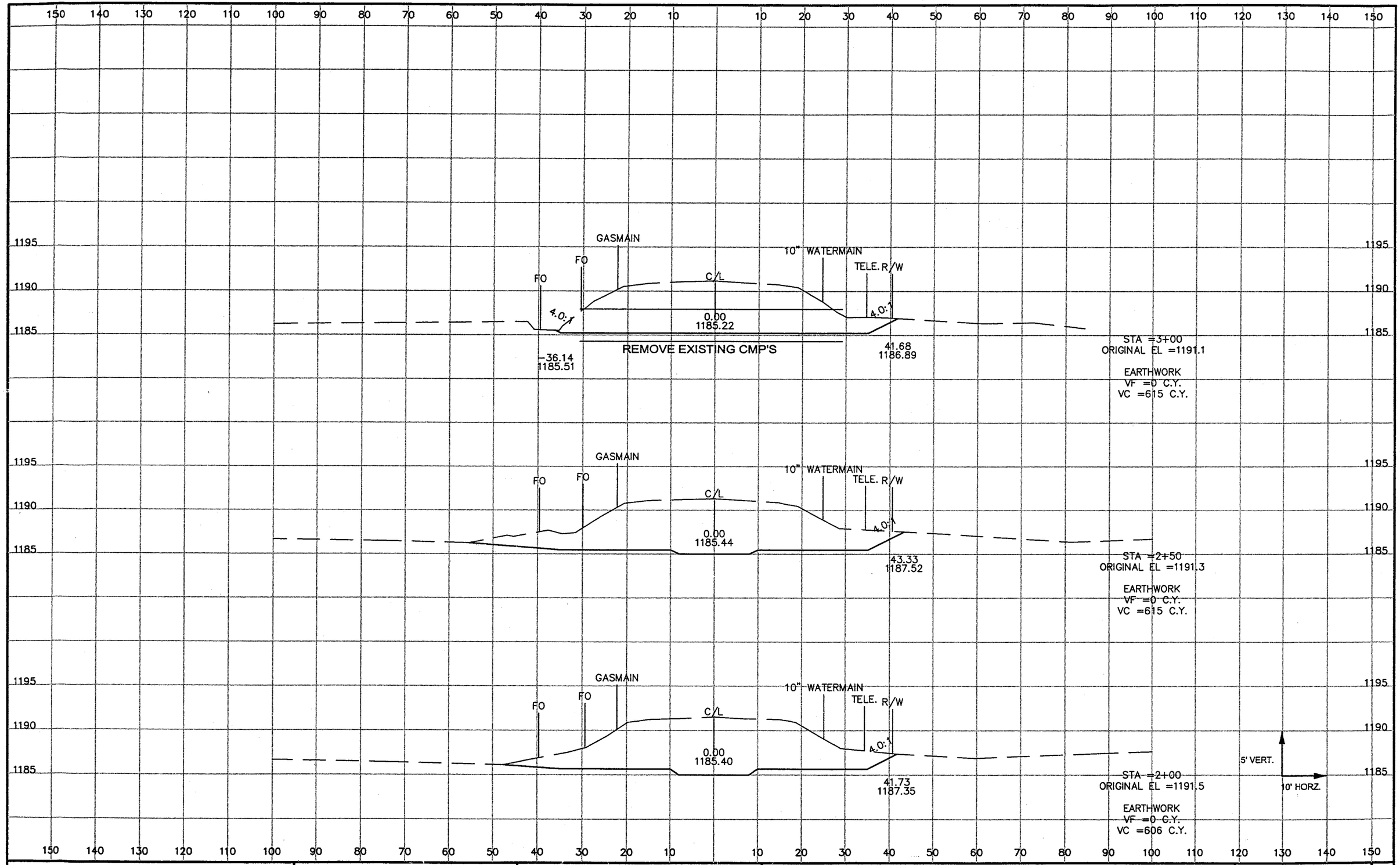

STATE PROJECT NUMBER: 6651-01-00	HWY: CTH N	COUNTY: MARATHON	CROSS SECTIONS: OLD CTH N	SHEET NO: 9.83	E