PROJECT ID: 6999-10-75

DESIGN ID: 6999-10-05

COUNTY: MARATHON

P:\DRAFT\32290200 - WESTON AVE\title.dwg, Model, 03/10/2004 07:23:44 AM

Jun 04

ORDER OF SHEETS

Sheet No.	1	Title
Sheet No.		Typical Sections and Details
Sheet No.		Estimate of Quantities
Sheet No.		Miscellaneous Quantities
Sheet No.		Right of Way Plat
Sheet No.		Plan and Profile
Sheet No.		Standard Detail Drawings
Sheet No.	✓	Sign Plates
Sheet No.		Structure Plans
Sheet No.		Computer Earthwork Data
Sheet No.		Cross Sections

TOTAL SHEETS = 241

STATE OF WISCONSIN

DEPARTMENT OF TRANSPORTATION

PLAN OF PROPOSED IMPROVEMENT

WESTON AVENUE, VILLAGE OF WESTON

AS BUILT PLANS

BIRCH STREET - C.T.H. X

LOCAL STREET

MARATHON COUNTY

STATE PROJECT	FEDERAL PROJECT	
	PROJECT	CONTRACT
6999-10-75	STP 2004523	1

Change Pages

CONSTRUCTION STAFF (NAME/RESPONSIBILITIES)

Eric Johnson (PEI) - Proj. leader
Tom Copiskey (PEI) - Inspector
Kyle Fischer (PEI) - Surveyor

SUPERVISOR Ron Hett
Manager Dan O'Leary
CONTRACTOR Earth Inc.

DATE STARTED 8/1/04

DATE COMPLETED 6/1/05

STATE PROJECT NUMBER
6999-10-75

N

R-8-E

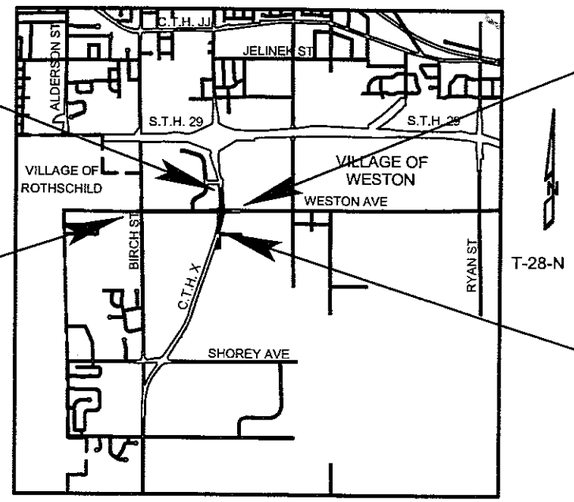

END CONSTRUCTION
STA. 206+00.00

END PROJECT 6999-10-75
STA. 41+00.00

BEGIN PROJECT 6999-10-75
STA. 7+00.00
Y = 175,709.2343
X = 293,308.6010

BEGIN CONSTRUCTION
STA. 191+50.00
Y = 175,039.1310
X = 296,264.0871

DESIGN DESIGNATION

			WESTON AVE.	C.T.H. X
A.D.T.	(2005)	=	5800	10,300
A.D.T.	(2024)	=	14,400	32,400
D.H.V.		=	1200	2700
D.		=	45/55	45/55
T		=	10%	10%
DESIGN SPEED		=	35 MPH	45 MPH
ESALS		=	2.4 MIL.	7.2 MIL.

CONVENTIONAL SYMBOLS

COUNTY LINE
CORPORATE LIMITS
PROPERTY LINE (P.L. + 58.1)
LOT LINE
LIMITED EASEMENT
EXISTING RIGHT OF WAY
PROPOSED OR NEW R/W LINE
SURVEY LINE
SLOPE INTERCEPT
ORIGINAL GROUND
MARSH OR ROCK PROFILE (To be noted as such) (ROCK)
MARSH AREA
WOODED OR SHRUB AREA
COMBUSTIBLE FLUIDS (CAUTION)

UNDERGROUND UTILITIES
GAS (G)
ELECTRIC (E)
TELEPHONE OR TELEGRAPH (T)
FIBER OPTICS LINE (FO)
SERVICE PEDESTAL
POWER POLE
LIGHT POLE
TELEPHONE POLE
RAILROAD
BARB WIRE FENCE
SILT FENCE
SANITARY SEWER (SAN)
STORM SEWER (SS)
WATER MAIN (W)
SAWCUT

LAYOUT
SCALE 0 1/2 MILE

TOTAL NET LENGTH OF CENTERLINE = 0.915 MILES URBAN

"Coordinates on this plan are referenced to the Wisconsin County Coordinate System (WCCS), Marathon County.

ACCEPTED FOR VILLAGE OF WESTON
3/15/04 (DATE) (DIRECTOR OF PUBLIC WORKS)

ACCEPTED FOR MARATHON COUNTY
3/15/04 (DATE) (CO. HWY. COMMISSIONER)

ORIGINAL PLANS PREPARED BY CENTRAL WISCONSIN ENGINEERS (ARCHITECTS, INC.)

RICHARD A. MARTENS, JR. E-22693 SHAWANO, WI PROFESSIONAL ENGINEER
3/15/04 (DATE) (SIGNATURE)

STATE OF WISCONSIN
DEPARTMENT OF TRANSPORTATION

PREPARED BY

Surveyor	CWE & A, INC.
Designer	CWE & A, INC.
District Examiner	
District Supervisor	
Proj. Dev. Engineer	
C.O. Examiner	NRAFFELDT

APPROVED FOR DISTRICT OFFICE
DATE: 3-17-04 (Signature)

E

STANDARD DETAIL DRAWINGS

SDD NUMBER	TITLE
8A 5-16a &b	INLET COVERS, TYPE A, H, A-S, & H-S / B, B-A, C, MS, MS-A, WM
8A 5-16d	INLET COVER, TYPE Z, MANHOLE COVERS, TYPE K, J, J-S, L, & M
8A 6-4	CATCH BASINS TYPE 1 & 2
8B 6-3	MANHOLES TYPE 1
8B 7-3	MANHOLES TYPE 2 & 3
8D 1-13	CONCRETE CURB, CONCRETE CURB & GUTTER AND PAVEMENT TIES
8D 5-9a	CURB RAMPS TYPES 1, 2 AND 3
8D5-9b	CURB RAMPS TYPE 1-A
8E 8-3	TYPICAL INSTALLATIONS OF EROSION/TEMPORARY DITCH CHECKS
8E 9-5	SILT FENCE
8E 10-2	INLET PROTECTION TYPE A, B, C AND D
8F 1-11	APRON ENDWALLS FOR CULVERT PIPE
8F2-1	APRON ENDWALLS FOR PIPE ARCH AND ELLIPTICAL PIPE
9B 2-6	CONDUIT
9B 4-5	PULL BOX
9C 2-2	CONCRETE BASES, TYPES 1, 2 &5
9C 3-2	TRANSFORMER/PEDESTAL BASES
9C 5-3	CONCRETE CONTROL CABINET BASES
9C 6-3	CONCRETE CONTROL CABINET BASE, TYPE 9, SPECIAL
9C 7-1	CONCRETE BASE, TYPE 6
9D 1-2	CABINET SERVICE INSTALLATION (METER BREAKER PEDESTAL)
9D 2-2	SIGNAL OR LIGHTING CONTROL CABINET
9E 1-4a	POLE MOUNTINGS FOR TRAFFIC SIGNALS TYPE 2
9E 1-5c	POLE MOUNTINGS FOR TRAFFIC SIGNALS AND LIGHTING UNITS, TYPE 4
9E 1-4e	POLE MOUNTINGS FOR LIGHTING UNITS, TYPE 6 (35 FEET)
9E 1-4g	HARDWARE DETAILS FOR POLE MOUNTINGS
9E 3-2	NON-FREEWAY LIGHTING UNIT POLE WIRING
9E 6-1	TRAFFIC SIGNAL STANDARD POLY BRACKET MOUNTINGS (TYPICAL) 13 FT. OR 15 FT.
9E 7-2	TRAFFIC SIGNAL STANDARD PEDESTRIAN AND FLASHER TYPICAL MOUNTING DETAILS
9F15-1b	LOOP DETECTOR INSTALLED IN BASE COURSE WITH PULL (SPLICE) BOX OFF ROADWAY (OPTION 2)
11B 2-1	CONCRETE MEDIAN NOSE
12A 3-7	NAME PLATE (STRUCTURES)
13C 1-11	CONCRETE PAVEMENT LONGITUDINAL JOINTS AND PAVEMENT TIES
13C 13-4	URBAN DOWELED CONCRETE PAVEMENT
15C 2-4a	BARRICADES AND SIGNS FOR MAINLINE CLOSURES
15C 2-4b	BARRICADES AND SIGNS FOR MAINLINE CLOSURES
15C 3-1	BARRICADES AND SIGNS FOR SIDEROAD CLOSURES
15C 4-1	TRAFFIC CONTROL, ADVANCE WARING SIGNS 45 M.P.H. OR GREATER TWO-WAY UNDIVIDED ROAD OPEN TO TRAFFIC
15C 5-1	TRAFFIC CONTROL, ADVANCE WARING SIGNS 40 M.P.H. OR LESS TWO-WAY UNDIVIDED ROAD OPEN TO TRAFFIC
15C 7-6a	PAVEMENT MARKING SYMBOLS
15C 8-9a	PAVEMENT MARKING (MAINLINE)
15C 8-9d	PAVEMENT MARKING (LEFT TURN LANE)
15C 8-10e	PAVEMENT MARKING (ISLANDS, STOP LINE & CROSS WALK)
15C12-2	TRAFFIC CONTROL FOR LANE CLOSURE (SUITABLE FOR MOVING OPERATIONS)
15D12-2	TRAFFIC CONTROL, LANE CLOSURE, SPEEDS GREATER THAN 40 M.P.H.
15D 20-1	TRAFFIC CONTROL, SINGLE LANE CLOSURE NON-FREEWAY/EXPRESSWAY
16A1-6	LANDMARK REFERENCE MONUMENTS AND COVERS

DNR LIAISON

WISCONSIN DEPARTMENT OF NATURAL RESOURCES
473 GRIFITH AVE.
WISCONSIN RAPIDS, WI 54494
MR. CAMERON BUMP
PHONE: (715)-421-7867

UTILITIES

VILLAGE OF WESTON
5500 SCHOFIELD AVENUE
WESTON, WI 54476
KEITH DONNER
PHONE: (715) 359-6114

CHARTER COMMUNICATIONS
853 McINTOSH STREET
WAUSAU, WI 54402-1818
JEFF KULAF
PHONE: (715)-842-3910 EXT.256

WISCONSIN PUBLIC SERVICE
2001 PLOVER ROAD
P.O. BOX 637
PLOVER, WI. 54467-0637
PHONE: (715) 345-7567
TOM CARLSON
REGIONAL ENGINEER (NATURAL GAS)

WISCONSIN PUBLIC SERVICE
1700 SHERMAN STREET
WAUSAU, WI 54402-1166
JON BROWN
REGIONAL ENGINEER (ELECTRIC)
PHONE: (715) 848-7327

ANR PIPELINE
2375 NORTH 2ND DRIVE
STEVENS POINT, WI 54481
DUANE PRONDZINSKI
PHONE: (715) 295-3143

AMERICAN TRANSMISSION COMPANY
N19 W23993 RIDGEVIEW PARKWAY WEST
WAUKESHA, WI 53187
ANDY EBERHARDT, REAL ESTATE
PHONE: (262) 506-6864

VERIZON
521 4TH STREET
WAUSAU, WI. 54403
PHONE: (715) 847-1501
KEVIN SCHEDLBAUER

DIGGERS HOTLINE

TOLL FREE (800) 242-8511
MILWAUKEE AREA (414) 259-1181
HEARING IMPAIRED TDD (800) 542-2289
www.DiggersHotline.com

STANDARD ABBREVIATIONS

AGG	AGGREGATE
AH	AHEAD
ASPH	ASPHALTIC
AC	ASPHALT CEMENT
AVG	AVERAGE
ADT	AVERAGE DAILY TRAFFIC
BK	BACK
BM	BENCHMARK
BOC	BACK OF CURB
BOW	BACK OF WALK
BOP	BEGIN OF PROJECT
CB	CATCH BASIN
CE	COMMERCIAL ENTRANCE
C/L	CENTERLINE
CONC	CONCRETE
CTH	COUNTY TRUNK HIGHWAY
CWT	HUNDREDWEIGHT
D	DEGREE OF CURVE
DHV	DESIGN HOUR VOLUME
DISCH.	DISCHARGE
D	DIRECTIONAL DISTRIBUTION
E	EAST
E.B.	EAST BOUND
EOP	END OF PROJECT
ELEC	ELECTRIC
ELEV	ELEVATION
EXC	EXCAVATION
EBS	EXCAVATION BELOW SUBGRADE
EXIST	EXISTING
FERT	FERTILIZER
FND	FOUND
FO	FIBER OPTIC CABLE
F/L	FLOW LINE
HYD	HYDRANT
IN	INLET
INV	INVERT
IP	IRON PIPE
L	LENGTH OF CURVE
LHF	LEFT HAND FORWARD
LS	LUMP SUM
LT	LEFT
MAINT	MAINTENANCE
MATL	MATERIAL
MH	MANHOLE
N	NORTH
N.B.	NORTH BOUND
N0R	NORMAL
PE	PRIVATE ENTRANCE
R	RADIUS
R/L	REFERENCE LINE
RCP	REINFORCED CONCRETE PIPE
REQ'D	REQUIRED
RT	RIGHT
R/W	RIGHT-OF-WAY
SAN	SANITARY SEWER
S	SOUTH
S.B.	SOUTH BOUND
SHES	SPECIAL HIGH EARLY STRENGTH
SPECS	SPECIFICATIONS
SDD	STANDARD DETAIL DRAWINGS
STH	STATE TRUNK HIGHWAY
STA	STATION
SS	STORM SEWER
SE	SUPER ELEVATION
T	TANGENT
TEL	TELEPHONE
TI	TEMPORARY INTEREST
TOC	TOP OF CURB
T	TRUCKS (PERCENT OF)
TYP	TYPICAL
UG	UNDERGROUND
UNCL	UNCLASSIFIED
VAR	VARIABLE
V	VELOCITY OF DESIGN SPEED
VC	VERTICAL CURVE
WB	WEST BOUND
WM	WATERMAIN
WV	WATER VALVE
W	WEST
WAT	WATER
X	EAST GRID COORDINATE
Y	NORTH GRID COORDINATE

GENERAL NOTES

NO TREES OR SHRUBS ARE TO BE REMOVED WITHOUT APPROVAL OF THE ENGINEER. ENGINEER SHALL COORDINATE REMOVAL OF TREES WITH THE COUNTY FORESTER.

THE LOCATION OF EXISTING AND PROPOSED UTILITY INSTALLATIONS AS SHOWN ON THE PLANS ARE APPROXIMATE. THERE MAY BE OTHER UTILITY INSTALLATIONS WITHIN THE PROJECT AREA THAT ARE NOT SHOWN.

ALL BLENDING OF SLOPES BEHIND CONSTRUCTED SIDEWALKS SHALL BE TOPSOILED, FERTILIZED, AND SEEDED UNLESS OTHERWISE AUTHORIZED BY THE ENGINEER IN THE FIELD.

EROSION CONTROL IS THE SOLE RESPONSIBILITY OF THE CONTRACTOR.

CURVE DATA IS BASED ON THE ARC DEFINITION.

BEARINGS SHOWN ON THE PLAN ARE GRID BEARINGS TO THE NEAREST SECOND.

PAVEMENT REMOVAL WILL BE TO THE NEAREST JOINT OR A SAWED EDGE WILL BE REQUIRED AS DIRECTED BY THE ENGINEER.

WHEN THE QUANTITY OF THE ITEMS OF BASE, SUBBASE, OR SURFACE COURSE IS MEASURED FOR PAYMENT BY THE TON OR CUBIC YARD, THE DEPTH OR THICKNESS OF THE COURSES SHOWN ON THE PLAN IS APPROXIMATE AND THE ACTUAL THICKNESS WILL DEPEND ON THE DISTRIBUTION OF THE MATERIAL AS DIRECTED BY THE ENGINEER.

EXISTING ASPHALTIC MATERIAL REMOVED DURING THE OPERATIONS UNDER THIS CONTRACT SHALL BE ENTIRELY PICKED UP AND PROPERLY DISPOSED OF AT THE TIME OF OCCURRENCE.

THE CONTRACTOR WILL BE RESPONSIBLE FOR SEEDING ANY PREVIOUSLY GRASSED AREAS WHICH ARE DISTURBED BY HIS OPERATIONS OUTSIDE OF THE NORMAL CONSRUCTION LIMITS.

ORDER OF DETAIL SHEETS

ALIGNMENT DIAGRAM & PROJECT OVERVIEW
TYPICAL SECTIONS
CONSTRUCTION DETAILS
INTERSECTION DETAILS
EROSION CONTROL PLAN
STORM SEWER & UTILITIES PLAN
PERMANENT SIGNING PLAN
LIGHTING PLAN
TRAFFIC SIGNAL PLAN
PAVEMENT MARKING PLAN
TRAFFIC CONTROL
CONCRETE PAVER PLAN

P:\DRAFT\32290200 DOT WESTON AVE\GENOTES.dwg, Layout1, 4/2/2004 7:28:25 AM

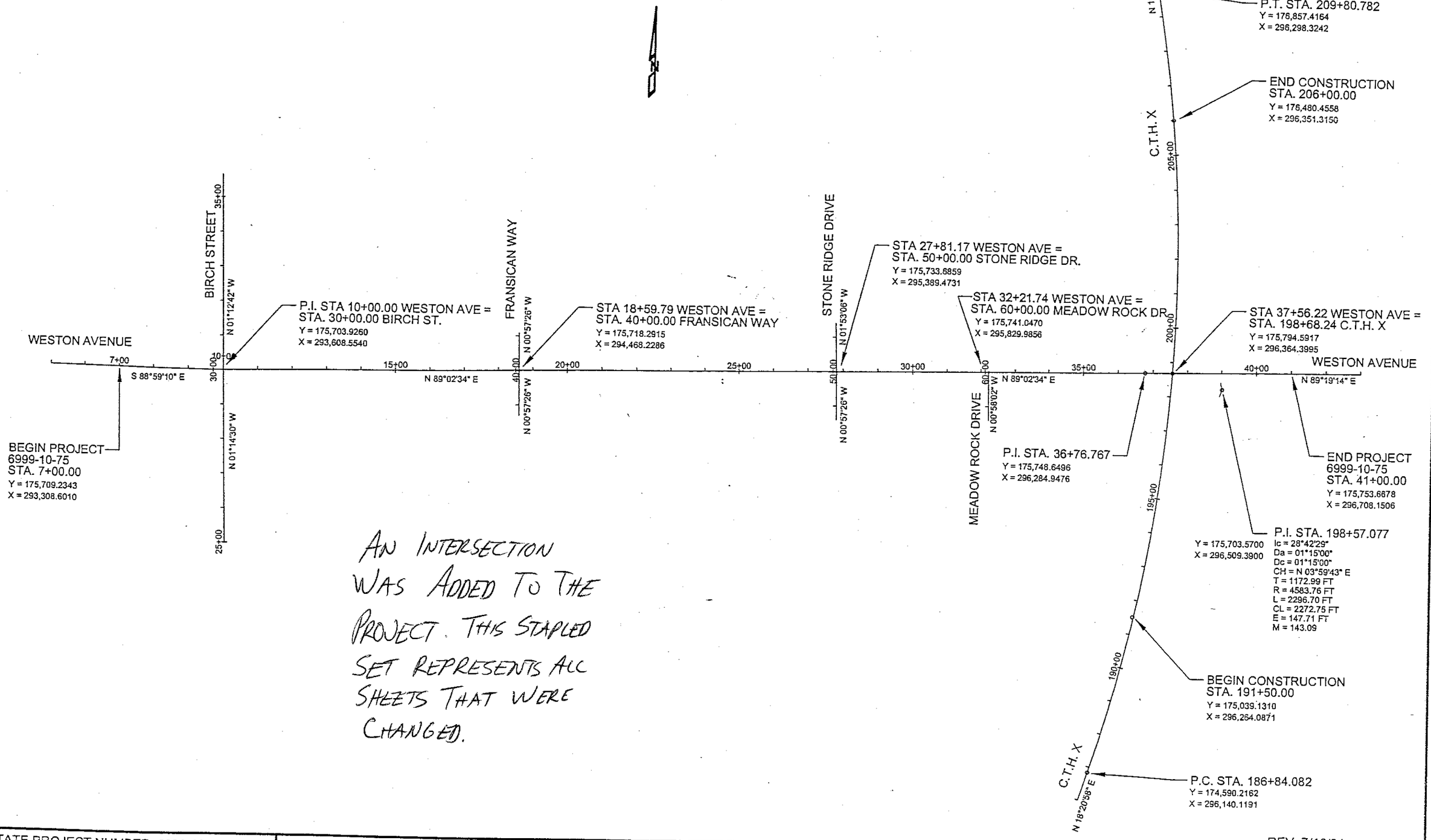

AN INTERSECTION WAS ADDED TO THE PROJECT. THIS STAPLED SET REPRESENTS ALL SHEETS THAT WERE CHANGED.

STATE PROJECT NUMBER: 6999-10-75	HWY: WESTON AVENUE	COUNTY: MARATHON	ALIGNMENT DIAGRAM & PROJECT OVERVIEW	REV. 7/16/04

SHEET NO: 3

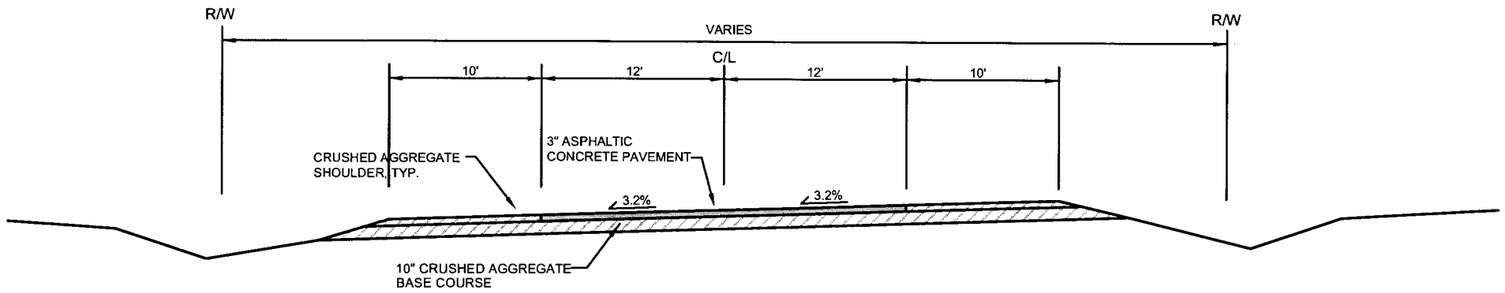

EXISTING TYPICAL SECTION - C.T.H. X

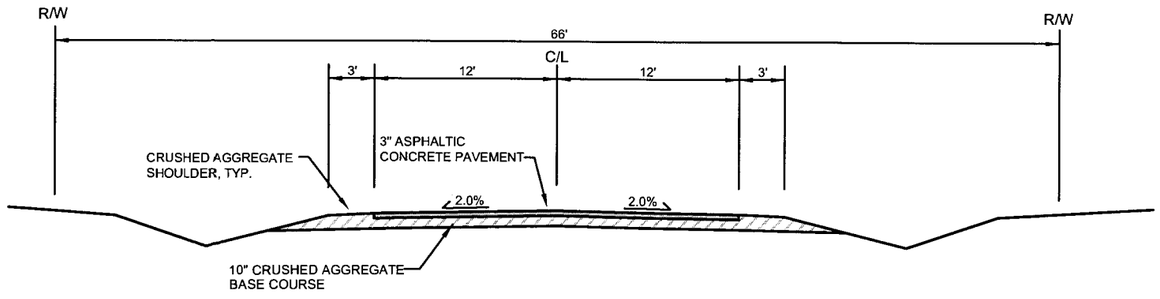

EXISTING TYPICAL SECTION - WESTON AVENUE

STATE PROJECT NUMBER: 6999-10-75	HWY: WESTON AVENUE	COUNTY: MARATHON	EXISTING TYPICAL SECTIONS:	SHEET NO: 4 E

P:\DRAFT\32290200 DOT WESTON AVE\EXIST TYPICALS.dwg, Model, 04/02/2004 07:15:10 AM

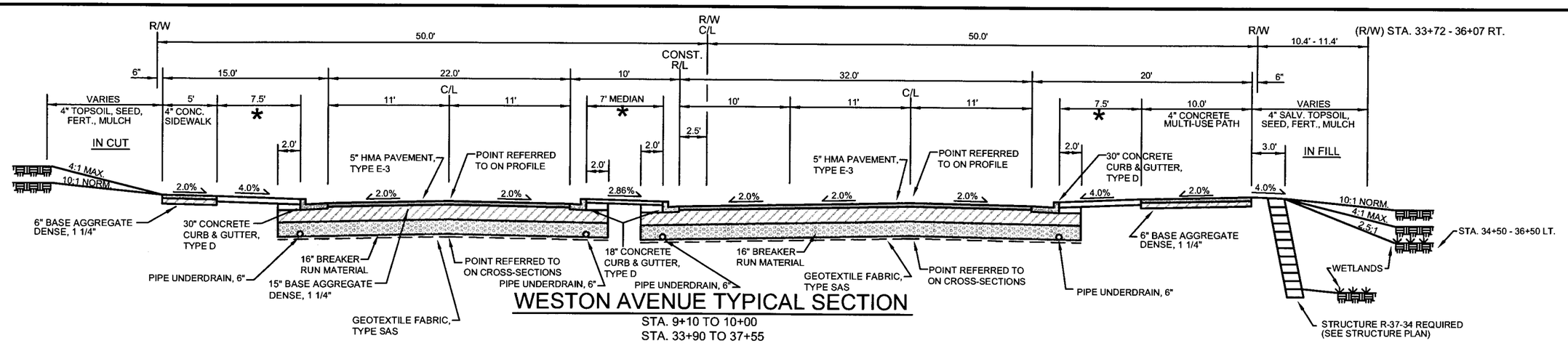

WESTON AVENUE TYPICAL SECTION

STA. 9+10 TO 10+00
STA. 33+90 TO 37+55

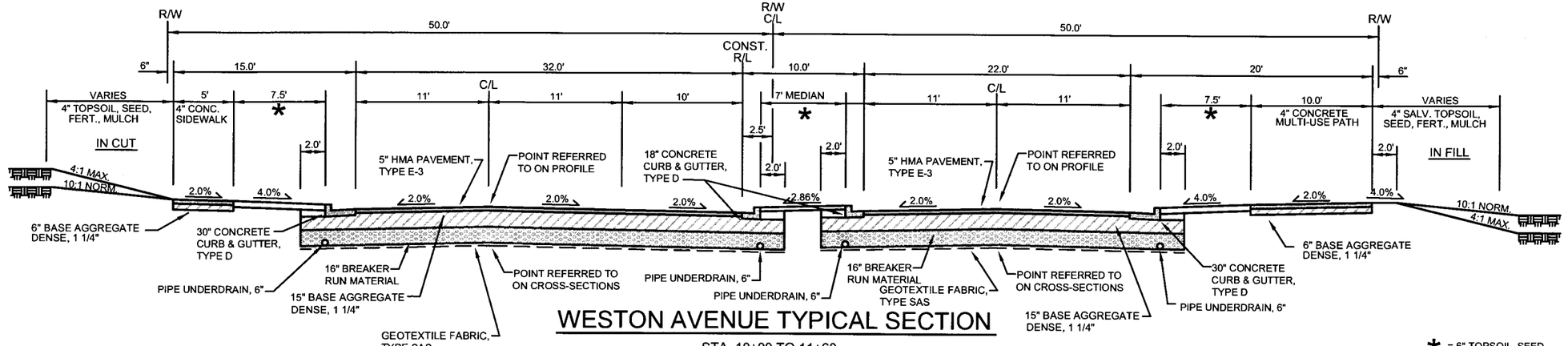

WESTON AVENUE TYPICAL SECTION

STA. 10+00 TO 11+60
STA. 18+60 TO 20+25
STA. 28+25 TO 29+00
STA. 37+55 TO 38+63

* = 6" TOPSOIL, SEED, FERILIZERT. & MULCH

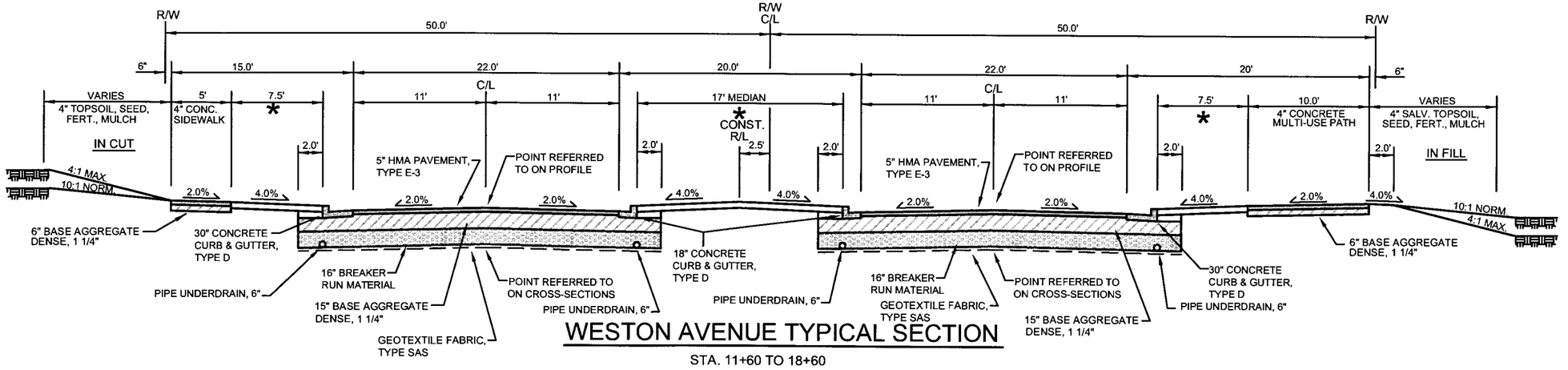

WESTON AVENUE TYPICAL SECTION

STA. 11+60 TO 18+60
STA. 20+25 TO 28+25
STA. 29+00 TO 33+90

STATE PROJECT NUMBER: 6999-10-75	HWY: WESTON AVENUE	COUNTY: MARATHON	TYPICAL SECTIONS: WESTON AVENUE	SHEET NO: 5	E

P:\DRAFT\32290200 DOT WESTON AVE\WESTYPICAL.dwg, Layout1, 04/02/2004 07:14:47 AM

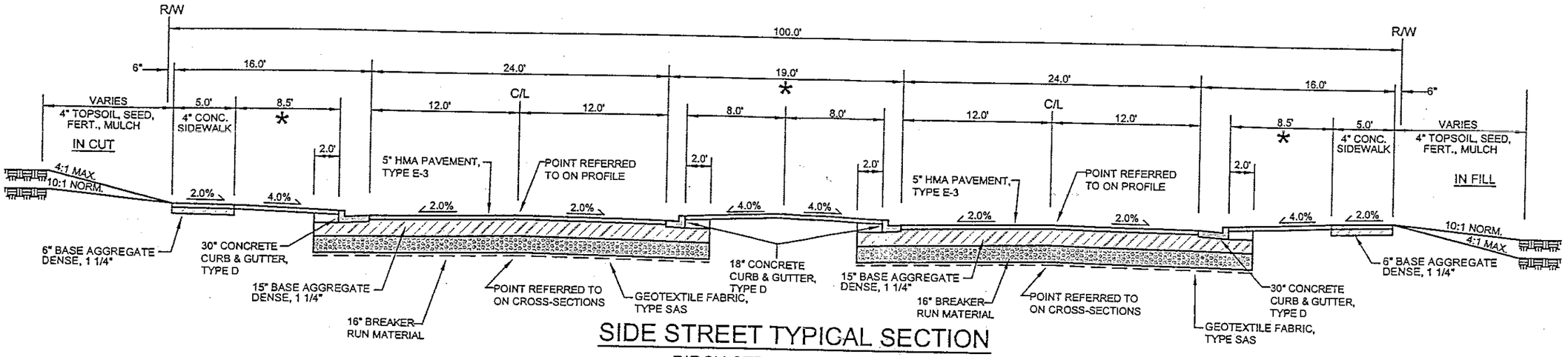

SIDE STREET TYPICAL SECTION

BIRCH STREET
FRANSICAN WAY
STONE RIDGE DRIVE
MEADOW ROCK DRIVE

* = 6" TOPSOIL, SEED, FERILIZERT. & MULCH

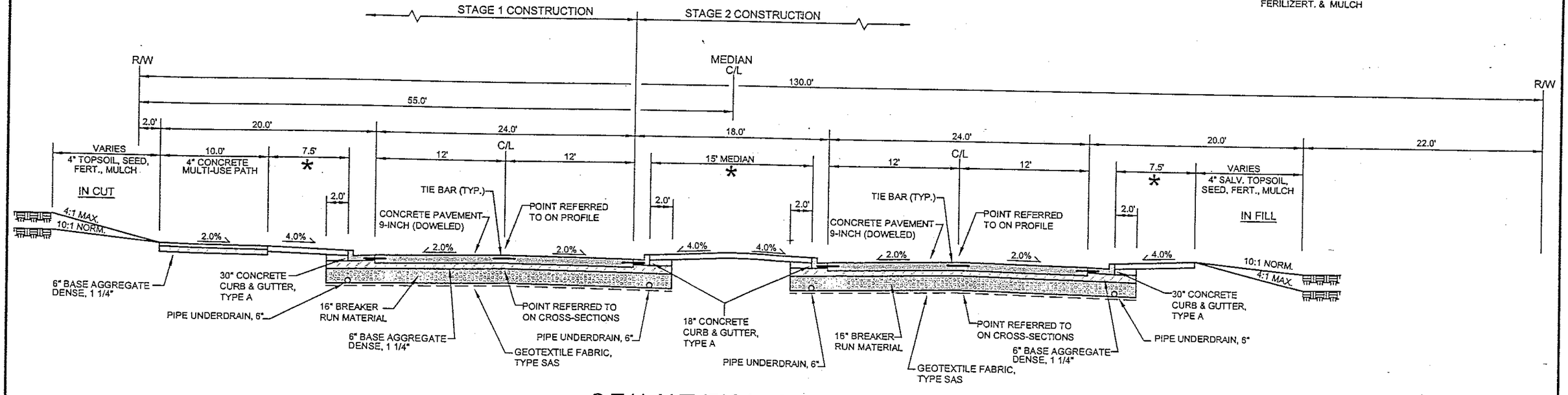

C.T.H. X TYPICAL SECTION

STA. 194+50 TO 206+00

STATE PROJECT NUMBER: 6999-10-75	HWY: WESTON AVENUE	COUNTY: MARATHON	TYPICAL SECTIONS: C.T.H. X

REV. 7/16/04

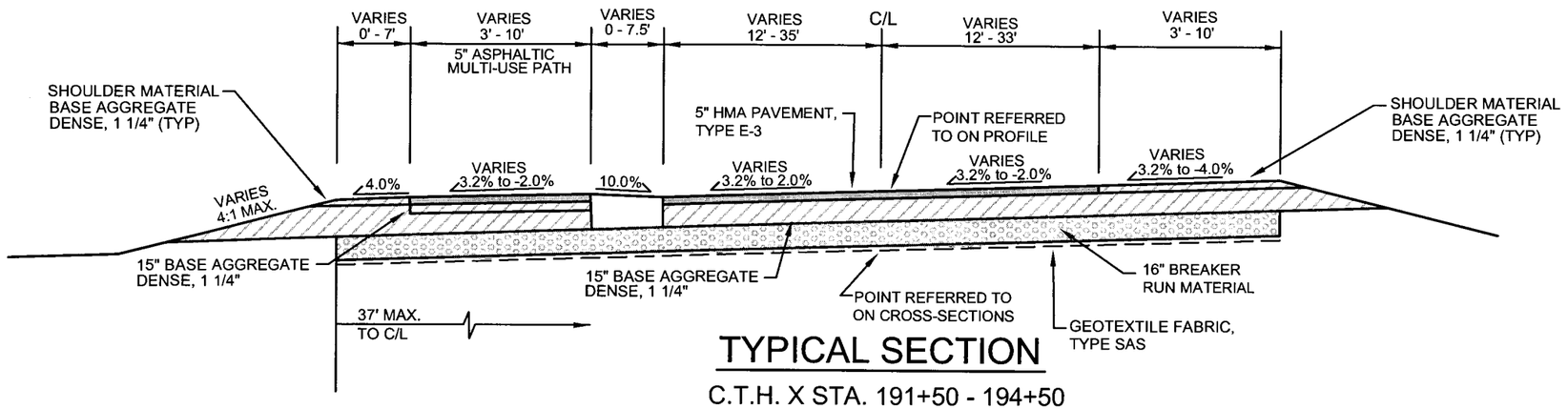

TYPICAL SECTION

C.T.H. X STA. 191+50 - 194+50

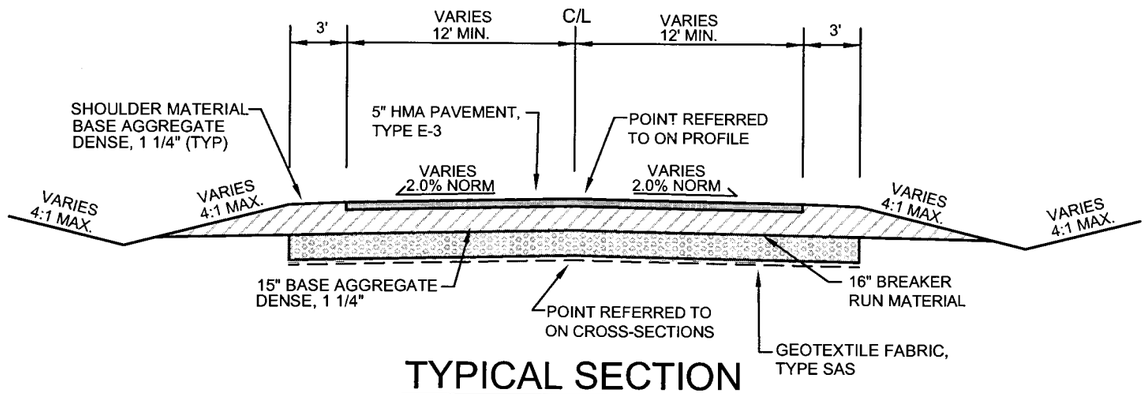

TYPICAL SECTION

BIRCH STREET STA. 27+50 - 29+17
WESTON AVENUE - STA. 7+00 - 9+10
WESTON AVENUE STA. 38+63 - 41+00

STATE PROJECT NUMBER: 6999-10-75	HWY: WESTON AVENUE	COUNTY: MARATHON	TYPICAL SECTIONS: WESTON AVENUE & C.T.H. X	SHEET NO: 7	E

P:\DRAFT\32290200 DOT WESTON AVE\CTHX TYPICAL.dwg, Layout2, 04/02/2004 07:13:18 AM

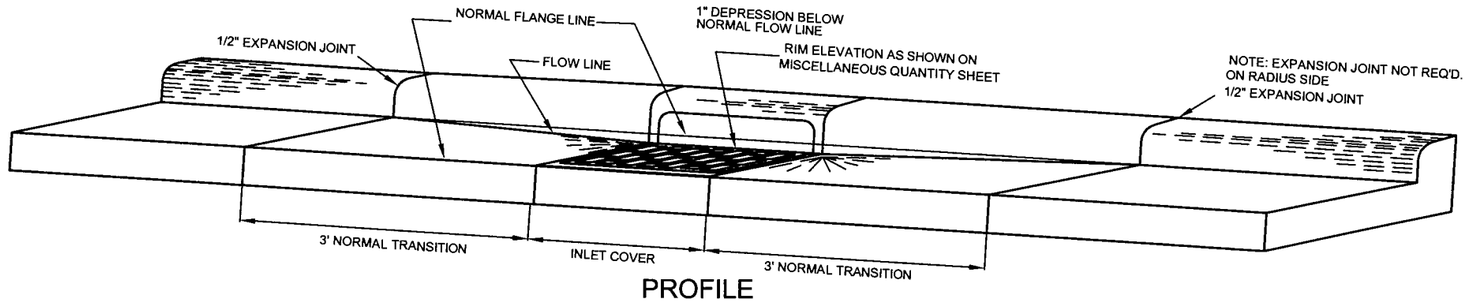

PROFILE

SECTION A-A

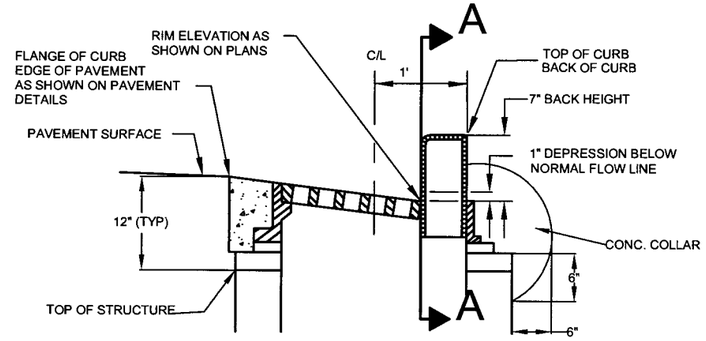

DEPRESSED GUTTER AT INLETS

NOT TO SCALE

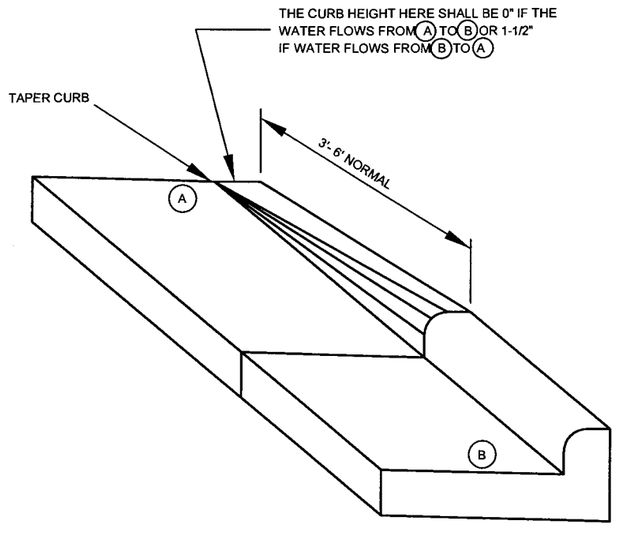

CURB TERMINI

NOT TO SCALE

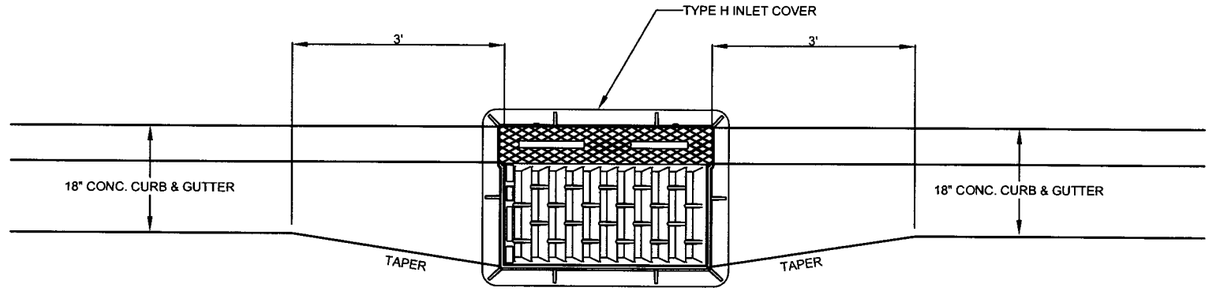

BACK OF CURB TAPER AT INLETS

NOT TO SCALE

STATE PROJECT NUMBER: 6999-10-75	HWY: WESTON AVENUE	COUNTY: MARATHON	CONSTRUCTION DETAILS	SHEET NO: 8	E

P:\DRAFT\32290200 DOT WESTON AVE\DETAILS.dwg, Layout1, 4/1/2004 3:45:55 PM

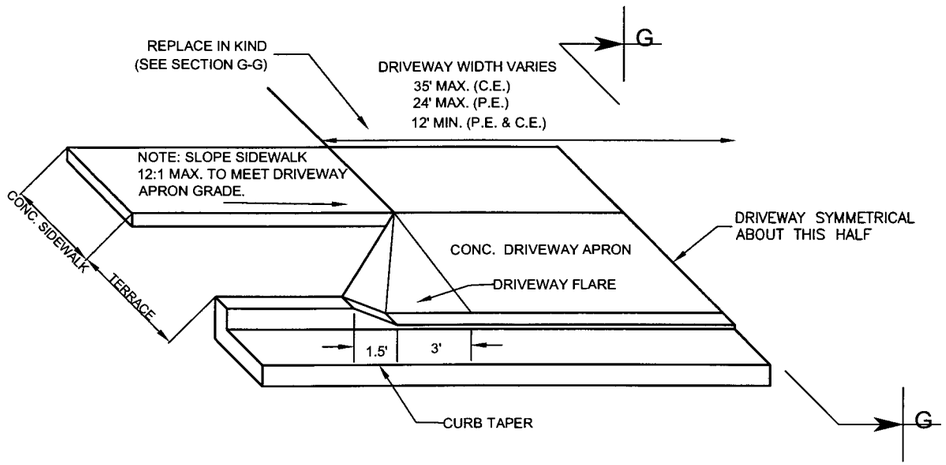

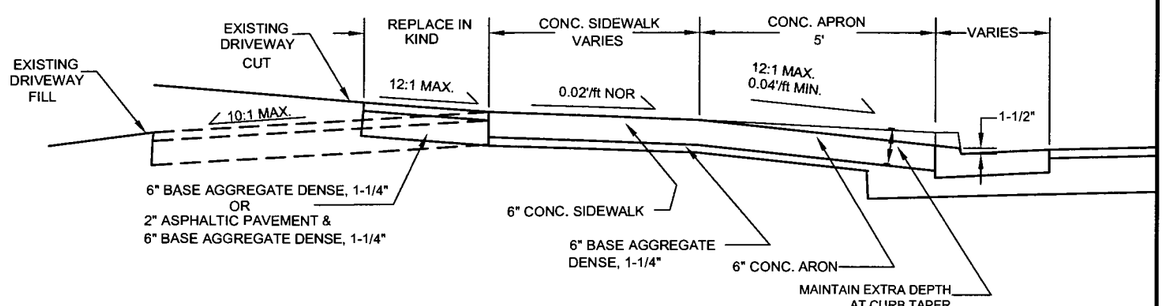

SECTION G-G

TYPICAL DRIVEWAY APRON
WITH SIDEWALK

NOT TO SCALE

ENDWALL SIZE	BAR DIAMETER	BOLT DIAMETER
12"	3/4"	5/8"
15"	3/4"	5/8"
18"	3/4"	5/8"
21"	3/4"	3/4"
24"	1"	3/4"
27"	1"	3/4"
30"	1"	3/4"
36"	1"	3/4"
42"	1 1/4"	3/4"
48"	1 1/4"	1"
54"	1 1/4"	1"
60"	1 1/4"	1"
72"	1 1/4"	1"

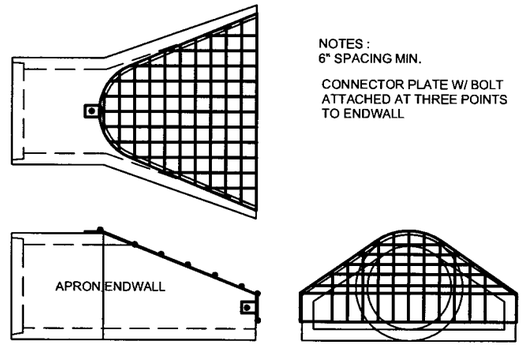

NOTES :
6" SPACING MIN.

CONNECTOR PLATE W/ BOLT ATTACHED AT THREE POINTS TO ENDWALL

APRON ENDWALL PIPE GRATE

NOT TO SCALE

RUNOFF COEFFICENT TABLE

	HYDROLOGIC SOIL GROUP											
	A			B			C			D		
	SLOPE RANGE (PERCENT)			SLOPE RANGE (PERCENT)			SLOPE RANGE (PERCENT)			SLOPE RANGE (PERCENT)		
LAND USE :	0-2	2-6	6 & OVER	0-2	2-6	6 & OVER	0-2	2-6	6 & OVER	0-2	2-6	6 & OVER
ROW CROPS	.08 .22	.16 .30	.22 .38	.12 .26	.20 .34	.27 .44	.15 .30	.24 .37	.33 .50	.19 .34	.28 .41	.38 .56
MEDIAN STRIP-TURF	.19 .24	.20 .26	.24 .30	.19 .25	.22 .28	.26 .33	.20 .26	.25 .30	.30 .37	.20 .27	.25 .32	.30 .38
SIDE SLOPE-TURF			.25 .32			.27 .34			.28 .36			.30 .38
PAVEMENT :												
ASPHALT	.70 - .95											
CONCRETE	.80 - .95											
BRICK	.70 - .80											
DRIVES, WALKS	.75 - .85											
ROOFS	.75 - .95											
GRAVEL ROADS, SHOULDERS	.70 - .60											

TOTAL PROJECT AREA WITHIN SLOPE INTERCEPTS = 13.62 ACRES

P:\DRAFT\32290200 DOT WESTON AVE\DETAILS.dwg, Layout2, 4/1/2004 3:46:17 PM

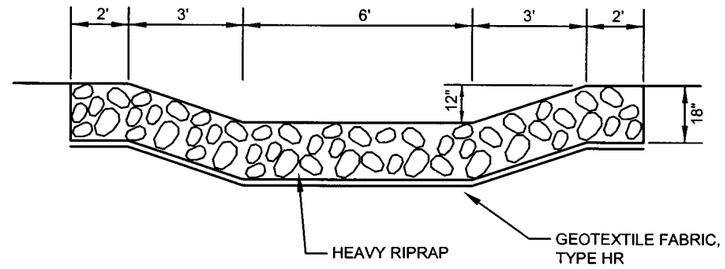

DETENTION POND OUTFALL DETAIL

NOTE:
SEE EROSION PLAN FOR RIPRAP LIMITS.

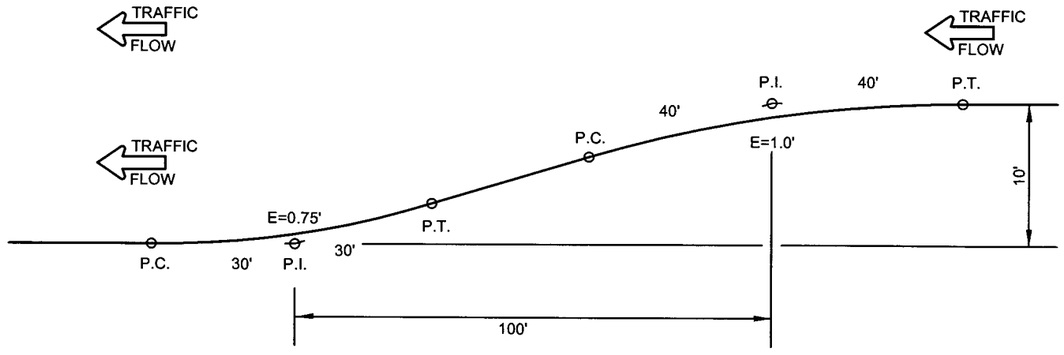

TYPICAL LEFT TURN LANE LAYOUT

NOT TO SCALE

STATE PROJECT NUMBER: 6999-10-75	HWY: WESTON AVENUE	COUNTY: MARATHON	CONSTRUCTION DETAILS	SHEET NO: 10 E

P:\DRAFT\32290200 DOT WESTON AVE\DETAILS.dwg, Layout3, 4/1/2004 3:45:30 PM

PERMANENT SIGNS

SIGN NO.	SIGN CODE	MESSAGE	SIZE	637.0202 SIGNS REFLECTIVE TYPE II S.F.	634.0616 WOOD POSTS 4" X 6" 16-FT	634.0618 WOOD POSTS 4" X 6" 18-FT	REMARKS	LOCATION	
								STATION	OFFSET
ROAD SIGNS									
3-01	R7-1D	NO PARKING	18 X 24	3.00	1	-	ON LIGHT POLE	25+46	42' L
3-02	R2-1	SPEED LIMIT 35 MPH	24 X 30	5.00	-	-	ON LIGHT POLE	25+89	42' L
3-03	R1-1	STOP	30 X 30	4.86	1	-		27+35	59' L
3-04	R4-7	KEEP RIGHT	24 X 30	5.00	1	-		27+25	2' L
3-05	R1-1	STOP	30 X 30	4.86	1	-		27+71	62' L
3-06	R4-7	KEEP RIGHT	24 X 30	5.00	-	-	WITH 3-05	-	-
3-07	R4-7	KEEP RIGHT	24 X 30	5.00	-	-	WITH 3-08	-	-
3-08	R1-1	STOP	30 X 30	4.86	1	-		27+71	61' R
3-09	R1-1	STOP	30 X 30	4.86	1	-		28+23	60' R
3-10	R4-7	KEEP RIGHT	24 X 30	5.00	1	-		28+38	2' R
3-11	R2-1	SPEED LIMIT 35 MPH	24 X 30	5.00	-	-	ON LIGHT POLE	28+52	38' R
3-12	R7-1D	NO PARKING	18 X 24	3.00	-	-	ON LIGHT POLE	31+24	38' R
4-01	W3-3	SIGNAL AHEAD	36 X 36	9.00	-	-	ON LIGHT POLE	33+00	38' R
4-02	R3-55L	LEFT TURN LANE	24 X 30	5.00	1	-		32+96	3' R
4-03	R7-1D	NO PARKING	18 X 24	3.00	-	-	ON LIGHT POLE	34+17	40' L
4-04	R2-1	SPEED LIMIT 35 MPH	24 X 30	5.00	-	-	ON LIGHT POLE	35+54	40' L
4-05	R4-7	KEEP RIGHT	24 X 30	5.00	1	-		31+94	-
4-06	R4-7	KEEP RIGHT	24 X 30	5.00	1	-		32+76	-
4-07	R4-7	KEEP RIGHT	24 X 30	5.00	-	-	WITH 4-08	-	-
4-08	R1-1	STOP	30 X 30	4.86	1	-		32+22	60' R
4-09	R1-1	STOP	30 X 30	4.86	1	-		32+62	62' R
5-01	R4-7	KEEP RIGHT	24 X 30	5.00	-	-	ON SIGNAL POLE	36+75	7' L
5-02	R4-7	KEEP RIGHT	24 X 30	5.00	-	-	ON SIGNAL POLE	37+52	70' R
5-03	R4-7	KEEP RIGHT	24 X 30	5.00	-	-	ON SIGNAL POLE	37+66	75' L
5-04	R4-7	KEEP RIGHT	24 X 30	5.00	-	-	ON SIGNAL POLE	38+27	1' R
5-05	R4-7	KEEP RIGHT	24 X 30	5.00	1	-		38+69	3' R
5-06	W4-2R	LANE REDUCTION TRANSITION	36 X 36	9.00	1	-		38+42	36' R
5-07	W6-3	TWO WAY TRAFFIC	36 X 36	9.00	-	1		41+00	21' R
5-08	W6-1	DIVIDED HIGHWAY	36 X 36	9.00	-	1		41+00	21' L
5-09	W3-3	SIGNAL AHEAD	36 X 36	9.00	-	1		42+00	21' L
6-01	W6-1	DIVIDED HIGHWAY	36 X 36	9.00	-	-	ON SIGNAL POLE	192+32	41' L
6-02	W6-3	TWO-WAY TRAFFIC	36 X 36	9.00	-	-	ON SIGNAL POLE	191+31	42' R
6-03	W3-3	SIGNAL AHEAD	36 X 36	9.00	-	-	ON SIGNAL POLE	194+34	42' R
6-04	R2-1	SPEED LIMIT 35 MPH	24 X 30	5.00	-	-	WITH 6-03	-	-
6-05	R4-7	KEEP RIGHT	24 X 30	5.00	1	-		194+53	3' R
6-06	W6-2	DIVIDED HIGHWAY ENDS	36 X 36	9.00	-	-	ON LIGHT POLE	195+40	41' L
6-07	W4-2R	LANE REDUCTION TRANSITION	36 X 36	9.00	-	-	ON LIGHT POLE	197+20	41' L
6-08	R7-1D	NO PARKING	18 X 24	3.00	-	-	ON LIGHT POLE	196+32	41' R
7-01	R2-1	SPEED LIMIT 45 MPH	24 X 30	5.00	-	-	ON LIGHT POLE	197+21	41' L
7-02	R2-1	SPEED LIMIT 35 MPH	24 X 30	5.00	-	-	ON LIGHT POLE	200+45	39' R
7-03	R7-1D	NO PARKING	18 X 24	3.00	-	-	ON LIGHT POLE	202+45	40' R
8-01	R3-55L	LEFT TURN LANE	24 X 30	5.00	1	-		203+54	4' L
8-02	R7-1D	NO PARKING	18 X 24	3.00	-	-	ON LIGHT POLE	205+47	41' L
SUBTOTALS OF SHEET 2				242.16	16	3			

PERMANENT SIGNS

SIGN NO.	SIGN CODE	MESSAGE	SIZE	637.0202 SIGNS REFLECTIVE TYPE II S.F.	634.0616 WOOD POSTS 4" X 6" 16-FT	634.0618 WOOD POSTS 4" X 6" 18-FT	REMARKS	LOCATION	
								STATION	OFFSET
	BIKE ROUTE SIGNS								
1-2B(1)	D11-1	BIKE ROUTE & SYMBOL	24 X 18	3.00	-	-	ON LIGHT POLE	9+29	38' R
1-2B(2)	M7-1	ARROW (UP)	9 X 12	0.75	-	-	WITH 1-2B(1)	-	-
1-3B	R1-1	STOP	18 X 18	1.75	-	-	ON LIGHT POLE	10+74	38' R
1-4B(1)	D11-1	BIKE ROUTE & SYMBOL	24 X 18	3.00	-	-	ON LIGHT POLE	10+74	38' R
1-4B(2)	M7-1	ARROW (UP)	9 X 12	0.75	-	-	WITH 1-4B(1)	-	-
2-2B(1)	D11-1	BIKE ROUTE & SYMBOL	24 X 18	3.00	-	-	ON LIGHT POLE	17+87	30' R
2-2B(2)	M7-1	ARROW (UP)	9 X 12	0.75	-	-	WITH 2-2B(1)	-	-
2-5B(1)	D11-1	BIKE ROUTE & SYMBOL	24 X 18	3.00	-	-	ON LIGHT POLE	19+32	38' R
2-5B(2)	M7-1	ARROW (UP)	9 X 12	0.75	-	-	WITH 2-5B(1)	-	-
3-2B(1)	D11-1	BIKE ROUTE & SYMBOL	24 X 18	3.00	-	-	ON LIGHT POLE	27+09	38' R
3-2B(2)	M7-1	ARROW (UP)	9 X 12	0.75	-	-	WITH 3-2B(1)	-	-
3-5B(1)	D11-1	BIKE ROUTE & SYMBOL	24 X 18	3.00	-	-	ON LIGHT POLE	28+52	38' R
3-5B(2)	M7-1	ARROW (UP)	9 X 12	0.75	-	-	WITH 3-5B(1)	-	-
4-2B(1)	D11-1	BIKE ROUTE & SYMBOL	24 X 18	3.00	-	-	WITH 4-1B	-	-
4-2B(2)	M7-1	ARROW (DOUBLE)	9 X 12	0.75	-	-	WITH 4-2B(1)	-	-
4-2B(3)	M7-1	ARROW (UP)	9 X 12	0.75	-	-	WITH 4-2B(1)	-	-
4-3B(1)	D11-1	BIKE ROUTE & SYMBOL	24 X 18	3.00	-	-	ON LIGHT POLE	31+47	38' R
4-3B(2)	M7-1	ARROW (UP)	9 X 12	0.75	-	-	WITH 4-3B(1)	-	-
4-4B(1)	D11-1	BIKE ROUTE & SYMBOL	24 X 18	3.00	-	-	ON LIGHT POLE	33+00	38' R
4-4B(2)	M7-1	ARROW (UP)	9 X 12	0.75	-	-	WITH 4-4B(1)	-	-
7-2B(1)	D11-1	BIKE ROUTE & SYMBOL	24 X 18	3.00	-	-	ON SIGNAL POLE	197+86	41' L
7-2B(2)	M7-1	ARROW (UP)	9 X 12	0.75	-	-	WITH 7-2B(1)	-	-
7-2B(3)	M7-1	ARROW (RIGHT)	12 X 9	0.75	-	-	WITH 7-2B(1)	-	-
7-4B(1)	D11-1	BIKE ROUTE & SYMBOL	24 X 18	3.00	-	-	ON SIGNAL POLE	199+43	43' L
7-4B(2)	M7-1	ARROW (UP)	9 X 12	0.75	-	-	WITH 7-4B(1)	-	-
SUBTOTALS OF SHEET 3				44.50	0	0			

PERMANENT SIGNS

SIGN NO.	SIGN CODE	MESSAGE	SIZE			REMARKS	LOCATION	
							STATION	OFFSET
CROSS WALK PUSH BUTTON SIGNS - FOR INFORMATION ONLY								
5-1X	R10-3B	CROSS WALK INFORMATION	9 X 12		- -	ON SIGNAL POLE	36+68	38' R
5-2X	R10-3B	CROSS WALK INFORMATION	9 X 12		- -	ON SIGNAL POLE	97+87	42' L
5-3X	R10-3B	CROSS WALK INFORMATION	9 X 12		- -	ON SIGNAL POLE	36+72	42' L
5-4X	R10-3B	CROSS WALK INFORMATION	9 X 12		- -	ON SIGNAL POLE	199+42	42' L
5-5X	R10-3B	CROSS WALK INFORMATION	9 X 12		- -	ON SIGNAL POLE	38+28	42' L
5-6X	R10-3B	CROSS WALK INFORMATION	9 X 12		- -	ON SIGNAL POLE	38+28	42' L
5-7X	R10-3B	CROSS WALK INFORMATION	9 X 12		- -	ON SIGNAL POLE	38+20	38' R
5-8X	R10-3B	CROSS WALK INFORMATION	9 X 12		- -	ON SIGNAL POLE	38+20	38' R
SUBTOTALS OF SHEET 1				180.82	16 3			
SUBTOTALS OF SHEET 2				242.16	16 3			
SUBTOTALS OF SHEET 3				44.50	0 0			
PROJECT TOTALS				467.48	32 6			

P:\DRAFT\32290200 DOT WESTON AVE\INTERSECT 1.dwg, Layout5, 4/1/2004 3:29:54 PM

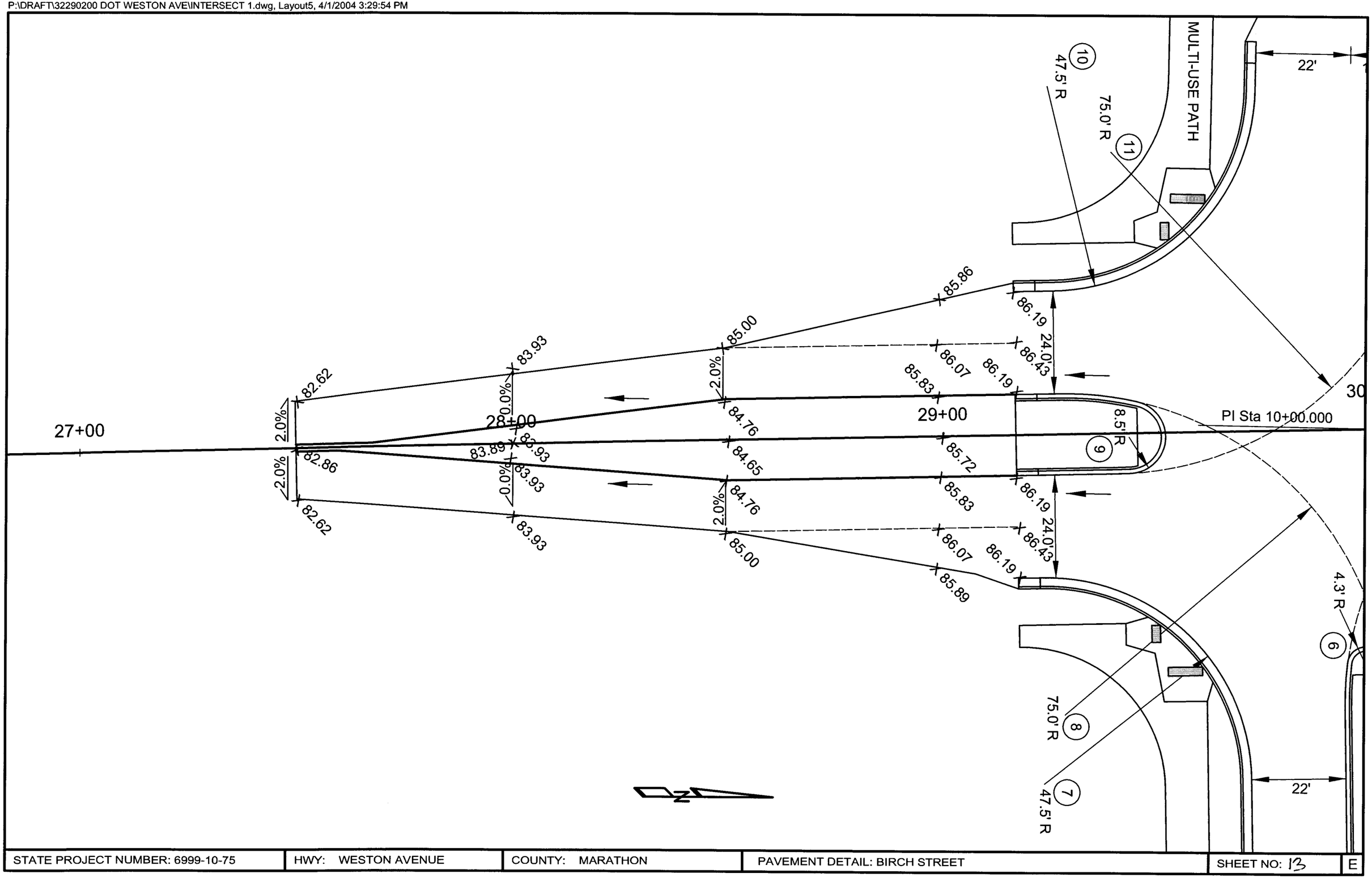

STATE PROJECT NUMBER: 6999-10-75	HWY: WESTON AVENUE	COUNTY: MARATHON	PAVEMENT DETAIL: BIRCH STREET	SHEET NO: 13	E

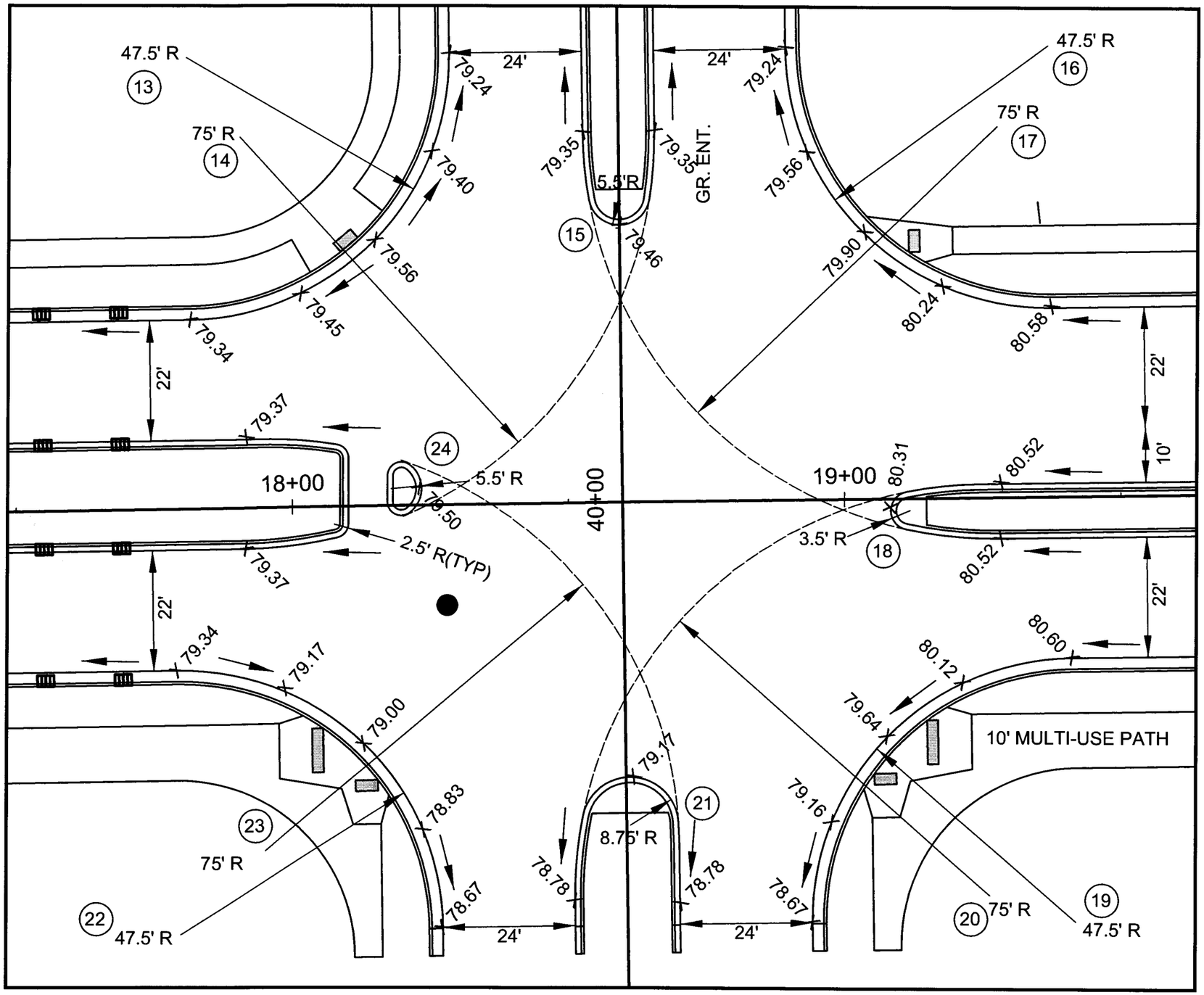

DATA TABLE

13	Sta 17+81.79 -82.00 ' LT Sta 40+82.00 -78.00 ' LT	Y = 175798.9768 X = 294388.8694
14	Sta 17+91.29 -67.50 ' LT Sta 40+67.50 -68.50 ' LT	Y = 175784.6359 X = 294398.6104
15	Sta 18+59.84 -56.00 ' LT Sta 40+56.00 0.04 ' RT	Y = 175774.2861 X = 294467.3352
16	Sta 19+37.79 -82.00 ' LT Sta 40+82.00 78.00 ' RT	Y = 175801.5833 X = 294544.8477
17	Sta 19+28.38 -67.50 ' LT Sta 40+67.50 68.58 ' RT	Y = 175786.9264 X = 294535.6757
18	Sta 19+11.86 2.18 ' RT Sta 39+97.82 52.06 ' RT	Y = 175716.9816 X = 294520.3211
19	Sta 19+40.79 77.00 ' RT Sta 39+22.50 81.00 ' RT	Y = 175642.1557 X = 294550.5122
20	Sta 19+25.29 72.52 ' RT Sta 39+27.48 65.50 ' RT	Y = 175646.8758 X = 294534.9311
21	Sta 18+60.45 58.93 ' RT Sta 39+41.07 0.65 ' RT	Y = 175659.3772 X = 294469.8671
22	Sta 17+78.79 77.50 ' RT Sta 39+22.50 -81.00 ' LT	Y = 175639.9489 X = 294388.5264
23	Sta 17+94.29 62.52 ' RT Sta 39+37.48 -65.50 ' LT	Y = 175654.6856 X = 294403.7823
24	Sta 18+17.84 -3.07 ' LT Sta 40+03.07 -41.95 ' LT	Y = 175720.6567 X = 294426.2327

STATE PROJECT NUMBER: 6999-10-75	HWY: WESTON AVENUE	COUNTY: MARATHON	INTERSECTION DETAIL: FRANCISCAN WAY	SHEET NO: 14	E

P:\DRAFT\32290200 DOT WESTON AVE\INTERSECT 2.dwg, Layout1, 4/1/2004 3:18:40 PM

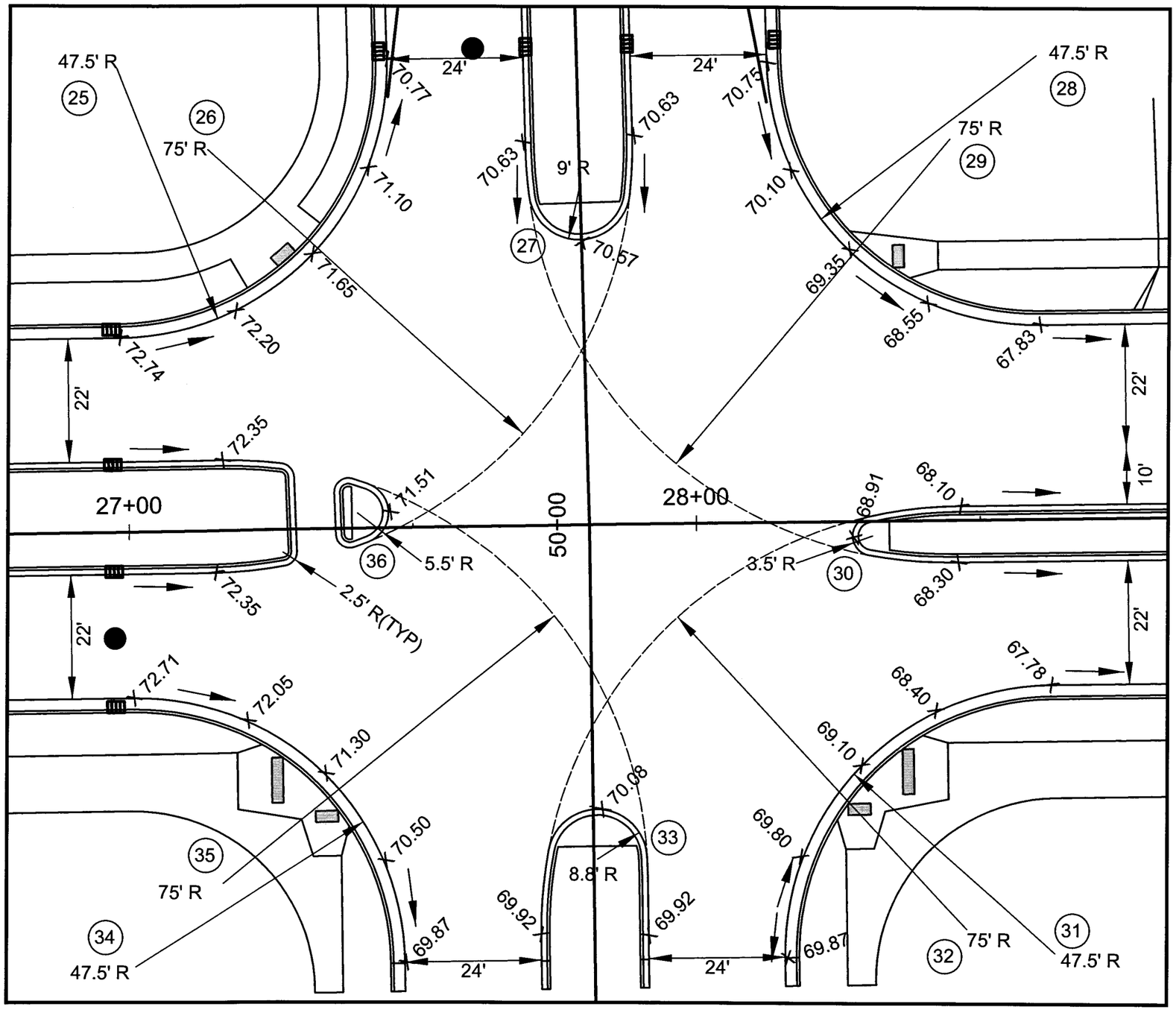

DATA TABLE

25	Sta 26+98.83 -82.00 ' LT Sta 50+83.32 -81.00 ' LT	Y = 175814.2987 X = 295305.7760
26	Sta 27+14.54 -67.50 ' LT Sta 50+68.57 -65.52 ' LT	Y = 175800.0614 X = 295321.7287
27	Sta 27+80.06 -59.56 ' LT Sta 50+59.57 -0.14 ' LT	Y = 175793.2197 X = 295387.3729
28	Sta 28+60.85 -82.00 ' LT Sta 50+80.70 81.00 ' RT	Y = 175817.0058 X = 295467.7746
29	Sta 28+45.58 -67.50 ' LT Sta 50+66.45 65.50 ' RT	Y = 175802.2527 X = 295452.7518
30	Sta 28+31.07 2.61 ' RT Sta 49+97.39 49.90 ' RT	Y = 175731.9072 X = 295439.4093
31	Sta 28+62.17 77.00 ' RT Sta 49+23.00 81.00 ' RT	Y = 175658.0500 X = 295471.7483
32	Sta 28+46.67 72.50 ' RT Sta 49+27.50 65.50 ' RT	Y = 175662.2904 X = 295456.1753
33	Sta 27+81.79 59.33 ' RT Sta 49+40.67 0.62 ' RT	Y = 175674.3777 X = 295391.0882
34	Sta 27+00.17 77.00 ' RT Sta 49+23.00 -81.00 ' LT	Y = 175655.3433 X = 295309.7710
35	Sta 27+15.67 62.50 ' RT Sta 49+37.50 -65.50 ' LT	Y = 175670.1002 X = 295325.0265
36	Sta 27+40.21 -2.71 ' LT Sta 50+03.37 -40.91 ' LT	Y = 175735.7096 X = 295348.4776

STATE PROJECT NUMBER: 6999-10-75	HWY: WESTON AVENUE	COUNTY: MARATHON	INTERSECTION DETAIL: STONE RIDGE DRIVE	SHEET NO: 15 E

P:\DRAFT\32290200 DOT WESTON AVE\INTERSECT 3.dwg, Layout1, 4/1/2004 3:19:30 PM

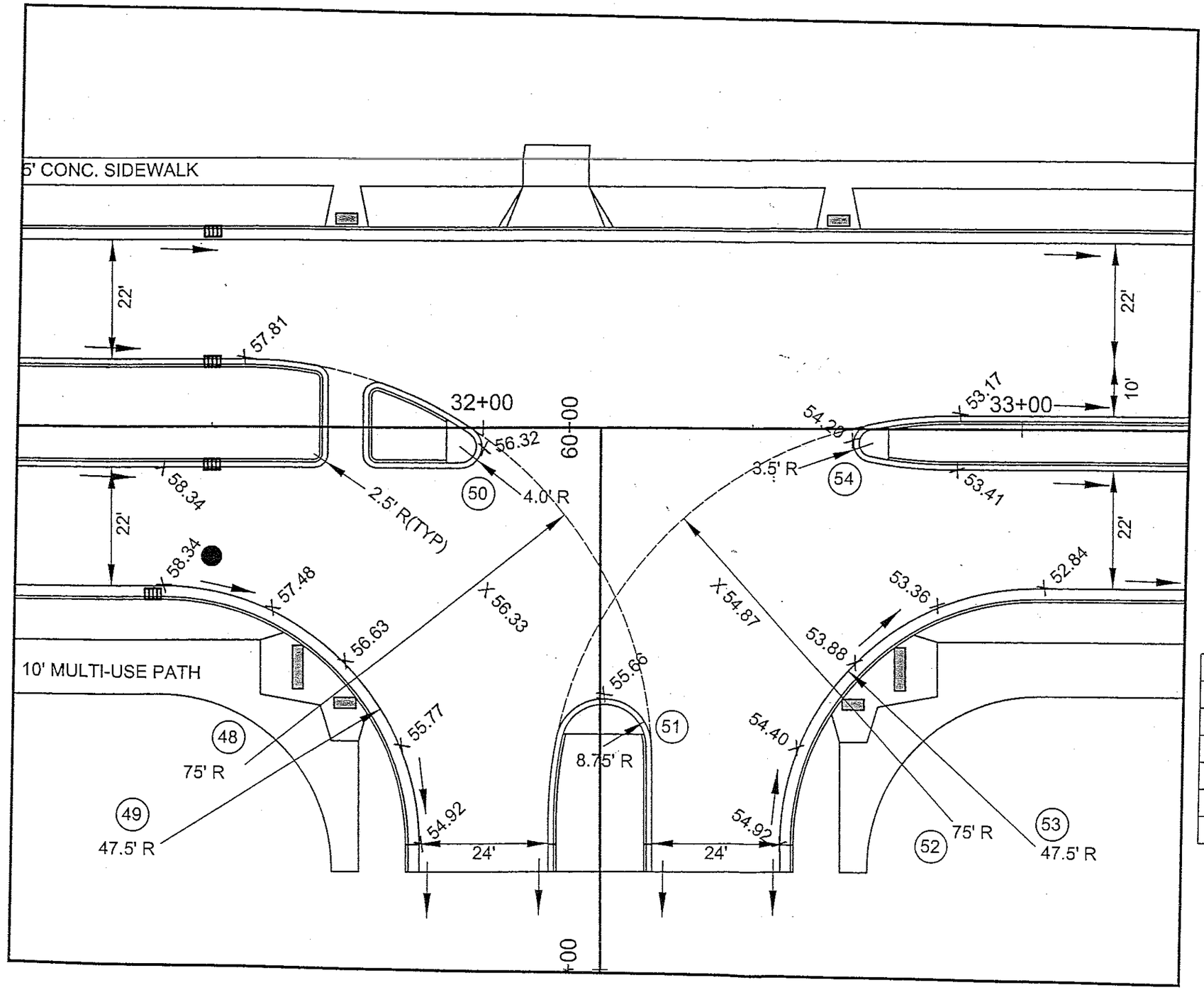

DATA TABLE

48	Sta 31+56.25 62.50 ' RT Sta 59+37.51 -65.50' LT	Y = 175677.4615 X = 295785.5497
49	Sta 31+40.75 77.00 ' RT Sta 59+23.01 -81.00' LT	Y = 175662.7046 X = 295750.2966
50	Sta 31+95.75 3.50' RT Sta 59+96.50 -25.99' LT	Y = 175737.1132 X = 295804.0552
51	Sta 32+22.41 58.94' RT Sta 59+41.06 0.65' RT	Y = 175682.1263 X = 295831.6352
52	Sta 32+87.25 72.50' RT Sta 59+27.49 65.50' RT	Y = 175669.6517 X = 295896.7002
53	Sta 33+02.75 77.00' RT Sta 59+22.99 81.00' RT	Y = 175665.4113 X = 295912.2740
54	Sta 32+72.15 2.61' RT Sta 59+97.38 50.41' RT	Y = 175739.2769 X = 295880.4341

STATE PROJECT NUMBER: 6999-10-75 | HWY: WESTON AVENUE | COUNTY: MARATHON | INTERSECTION DETAIL : MEADOW ROCK DRIVE

REV. 7/16/04

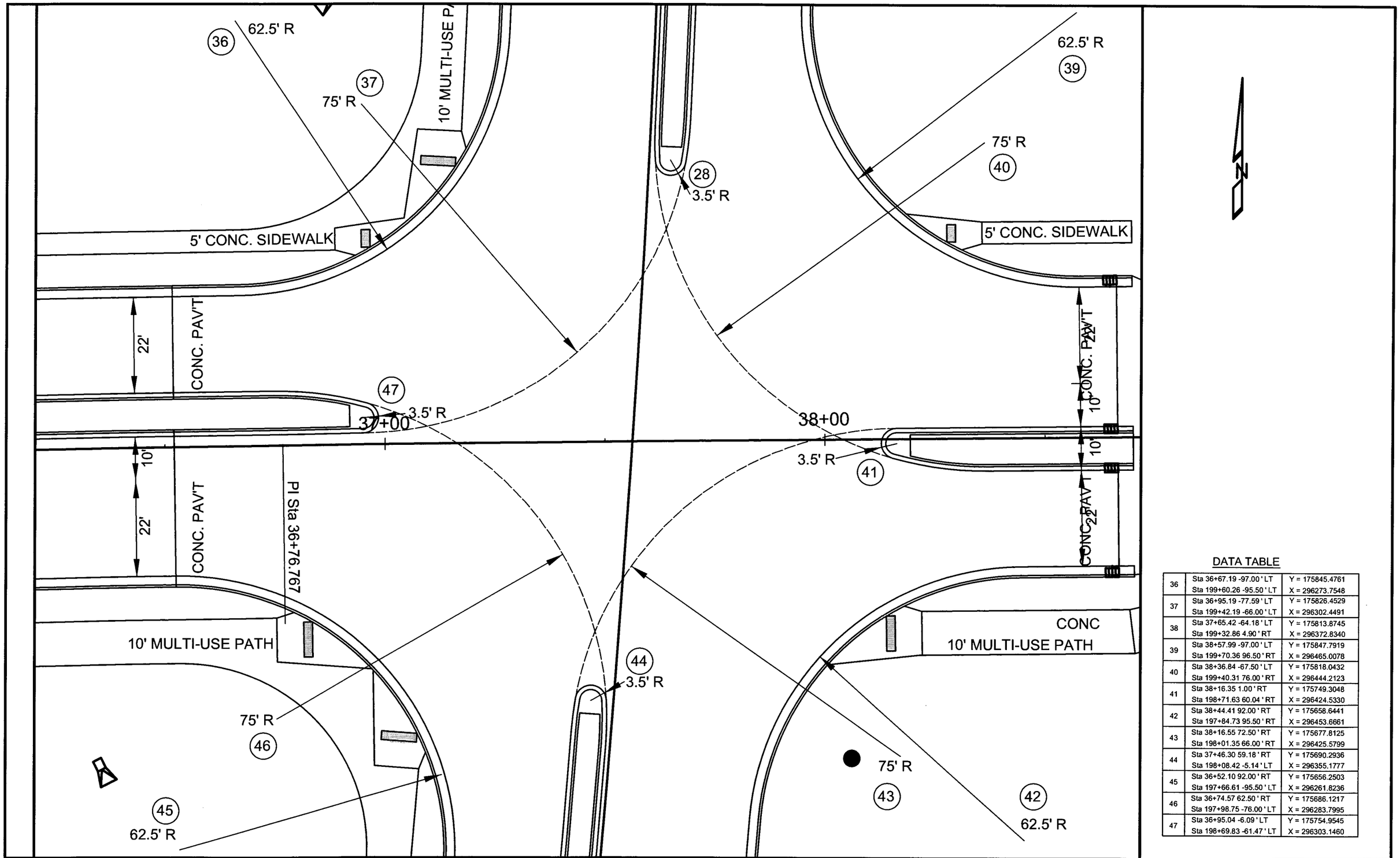

DATA TABLE

36	Sta 36+67.19 -97.00 ' LT Sta 199+60.26 -95.50 ' LT	Y = 175845.4761 X = 296273.7548
37	Sta 36+95.19 -77.59 ' LT Sta 199+42.19 -66.00 ' LT	Y = 175826.4529 X = 296302.4491
38	Sta 37+65.42 -64.18 ' LT Sta 199+32.86 4.90 ' RT	Y = 175813.8745 X = 296372.8340
39	Sta 38+57.99 -97.00 ' LT Sta 199+70.36 96.50 ' RT	Y = 175847.7919 X = 296465.0078
40	Sta 38+36.84 -67.50 ' LT Sta 199+40.31 76.00 ' RT	Y = 175818.0432 X = 296444.2123
41	Sta 38+16.35 1.00 ' RT Sta 198+71.63 60.04 ' RT	Y = 175749.3048 X = 296424.5330
42	Sta 38+44.41 92.00 ' RT Sta 197+84.73 95.50 ' RT	Y = 175658.6441 X = 296453.6661
43	Sta 38+16.55 72.50 ' RT Sta 198+01.35 66.00 ' RT	Y = 175677.8125 X = 296425.5799
44	Sta 37+46.30 59.18 ' RT Sta 198+08.42 -5.14 ' LT	Y = 175690.2936 X = 296355.1777
45	Sta 36+52.10 92.00 ' RT Sta 197+66.61 -95.50 ' LT	Y = 175656.2503 X = 296261.8236
46	Sta 36+74.57 62.50 ' RT Sta 197+98.75 -76.00 ' LT	Y = 175686.1217 X = 296283.7995
47	Sta 36+95.04 -6.09 ' LT Sta 198+69.83 -61.47 ' LT	Y = 175754.9545 X = 296303.1460

STATE PROJECT NUMBER: 6999-10-75	HWY: WESTON AVENUE	COUNTY: MARATHON	INTERSECTION DETAIL: C.T.H. X	SHEET NO: 16	E

P:\DRAFT\32290200 DOT WESTON AVE\INTERSECT 4.dwg, Layout1, 4/1/2004 3:20:10 PM

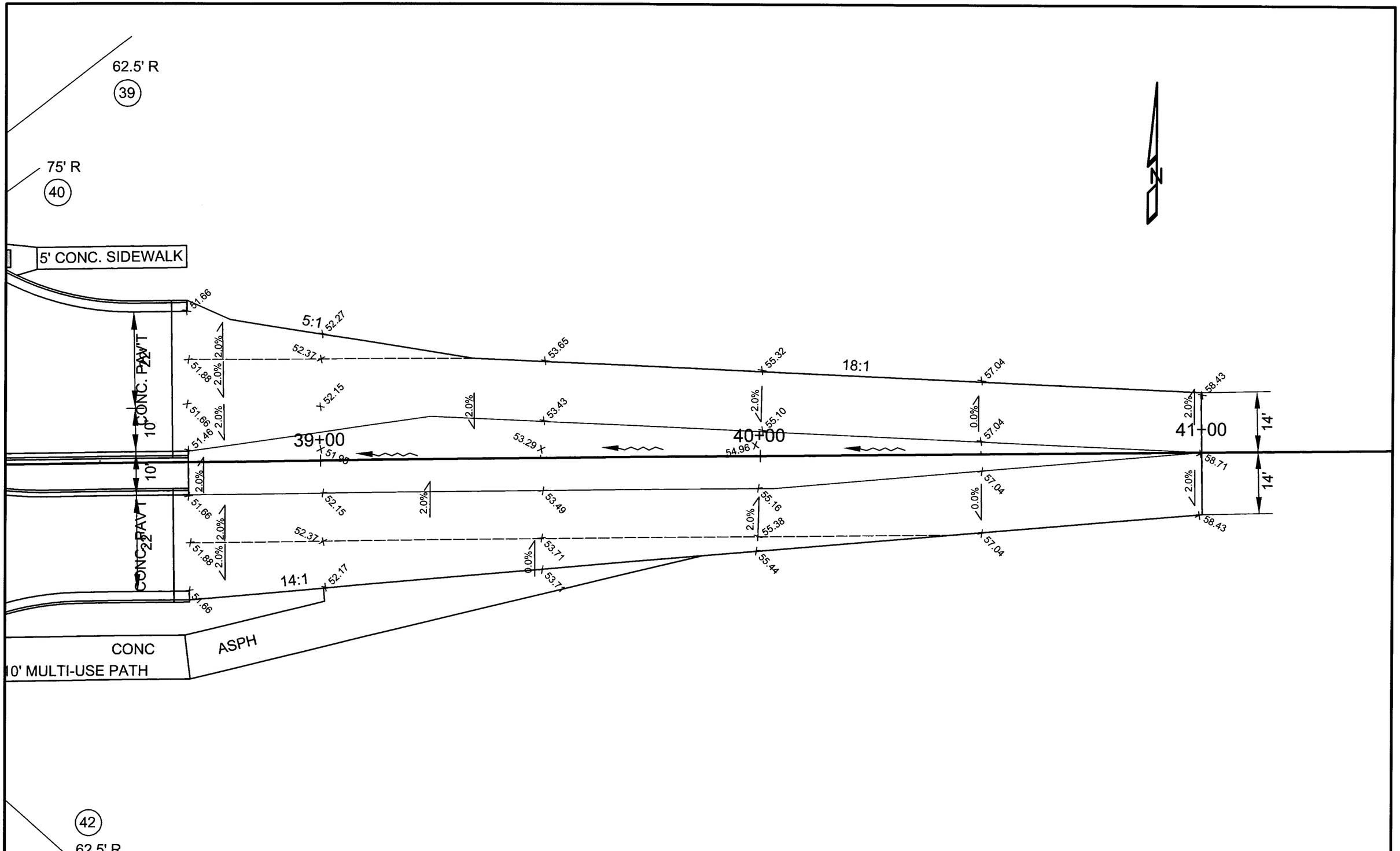

P:\DRAFT\32290200 DOT WESTON AVE\INTERSECT 1.dwg, Layout3, 4/1/2004 3:16:14 PM

STATE PROJECT NUMBER: 6999-10-75	HWY: WESTON AVENUE	COUNTY: MARATHON	PAVEMENT DETAIL: WESTON AVENUE	SHEET NO: 17	E

P:\DRAFT\32290200 DOT WESTON AVE\INTERSECT 1.dwg, Layout4, 4/1/2004 3:28:14 PM

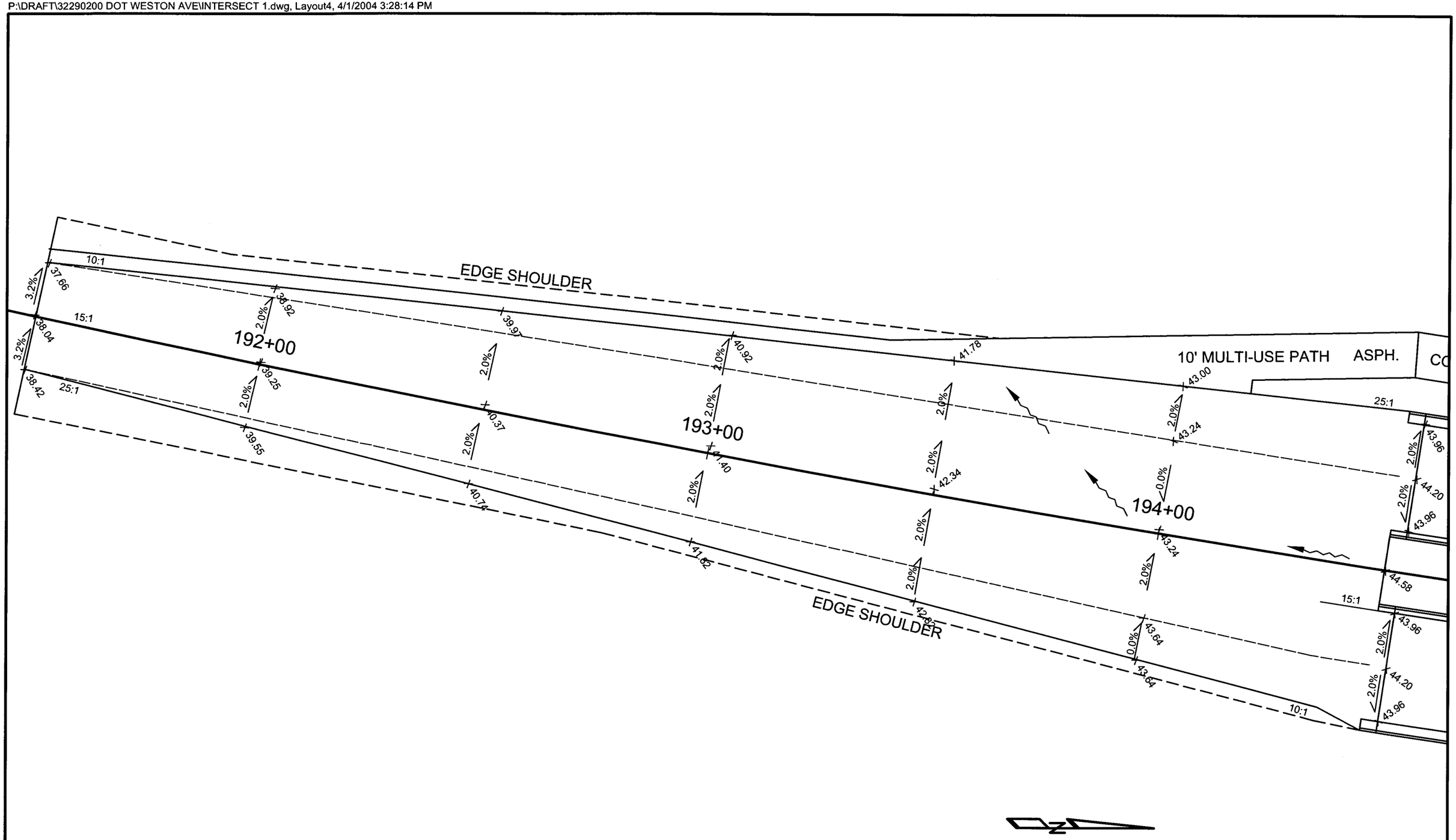

STATE PROJECT NUMBER: 6999-10-75	HWY: WESTON AVENUE	COUNTY: MARATHON	PAVEMENT DETAIL: C.T.H. X	SHEET NO: 18	E

P:\DRAFT\32290200 DOT WESTON AVE\PAVT JOINTS.dwg, Layout1, 4/1/2004 3:30:34 PM

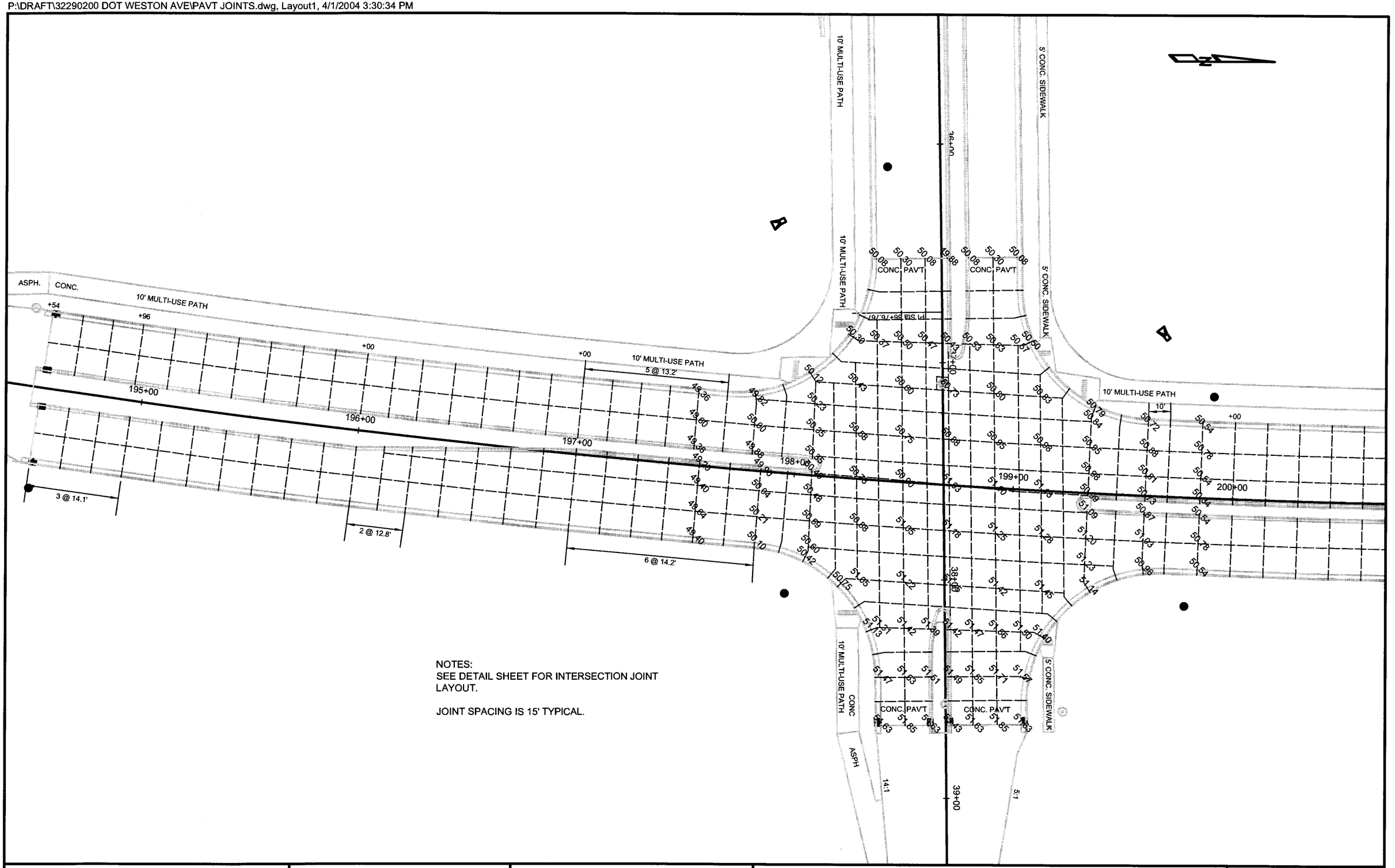

NOTES:
SEE DETAIL SHEET FOR INTERSECTION JOINT LAYOUT.

JOINT SPACING IS 15' TYPICAL.

STATE PROJECT NUMBER: 6999-10-75	HWY: WESTON AVENUE	COUNTY: MARATHON	PAVEMENT JOINTS AND GRADES	SHEET NO: 19	E

P:\DRAFT\32290200 DOT WESTON AVE\PAVT JOINTS.dwg, Layout2, 4/1/2004 3:30:46 PM

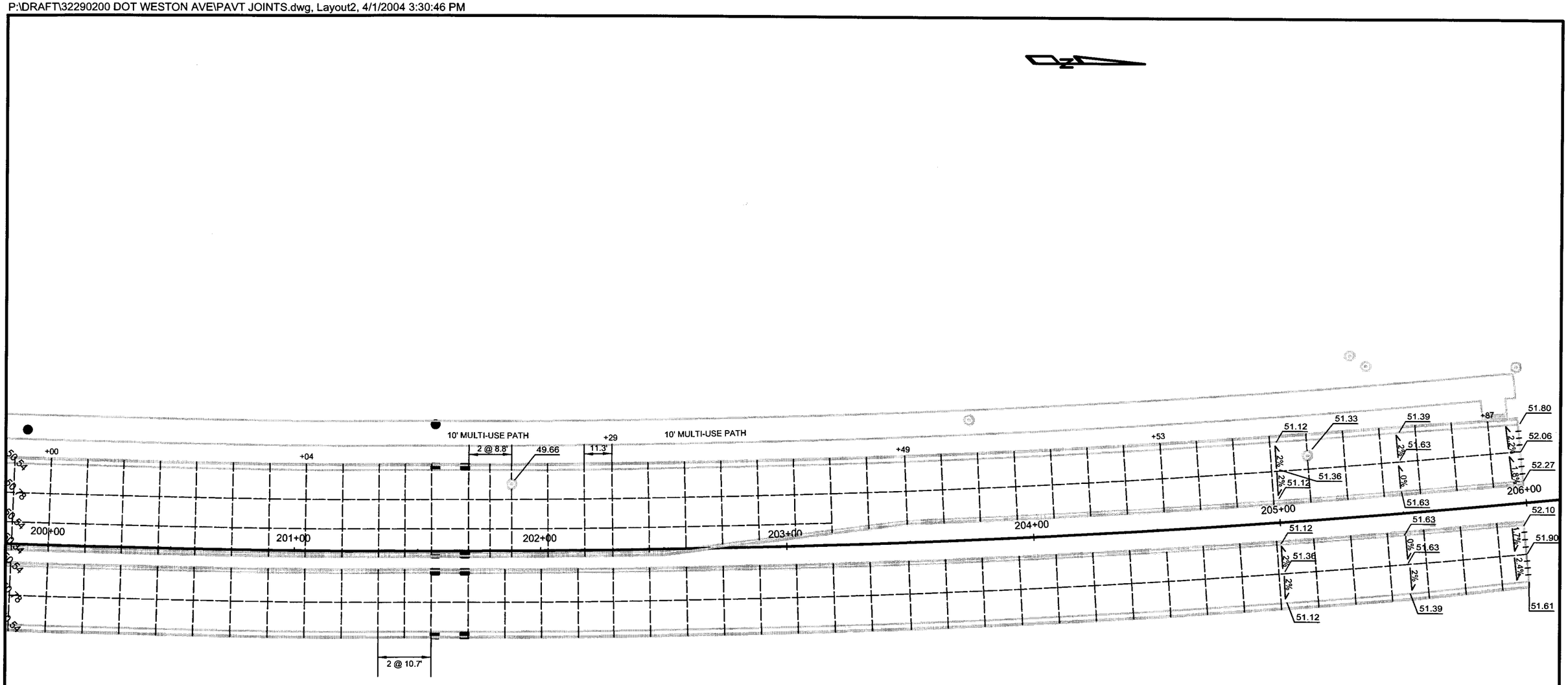

NOTES:
DOWEL NEW CONCRETE PAVEMENT TO EXISTING CONCRETE PAVEMENT.
(INCIDENTAL TO CONCRETE PAVEMENT, 9-INCH)

JOINT SPACING IS 15' TYPICAL.

STATE PROJECT NUMBER: 6999-10-75	HWY: WESTON AVENUE	COUNTY: MARATHON	PAVEMENT JOINTS AND GRADES	SHEET NO: 20	E

NOT TO SCALE

10' MULTI-USE PATH

5' CONC. SIDEWALK

CONC. PAV'T

CONC. PAV'T

10' MULTI-USE PATH

PI Sta 36+76.76

197+00

198+00

199+00

200+00

38+05

10' MULTI-USE PATH CONC

5' CONC. SIDEWALK

CONC. PAV'T

CONC. PAV'T

P:\DRAFT\32290200 DOT WESTON AVE\PAVT JOINTS.dwg, Layout3, 4/1/2004 3:21:01 PM

STATE PROJECT NUMBER: 6999-10-75	HWY: WESTON AVENUE	COUNTY: MARATHON	PAVEMENT JOINTS AND GRADING	SHEET NO: 21	E

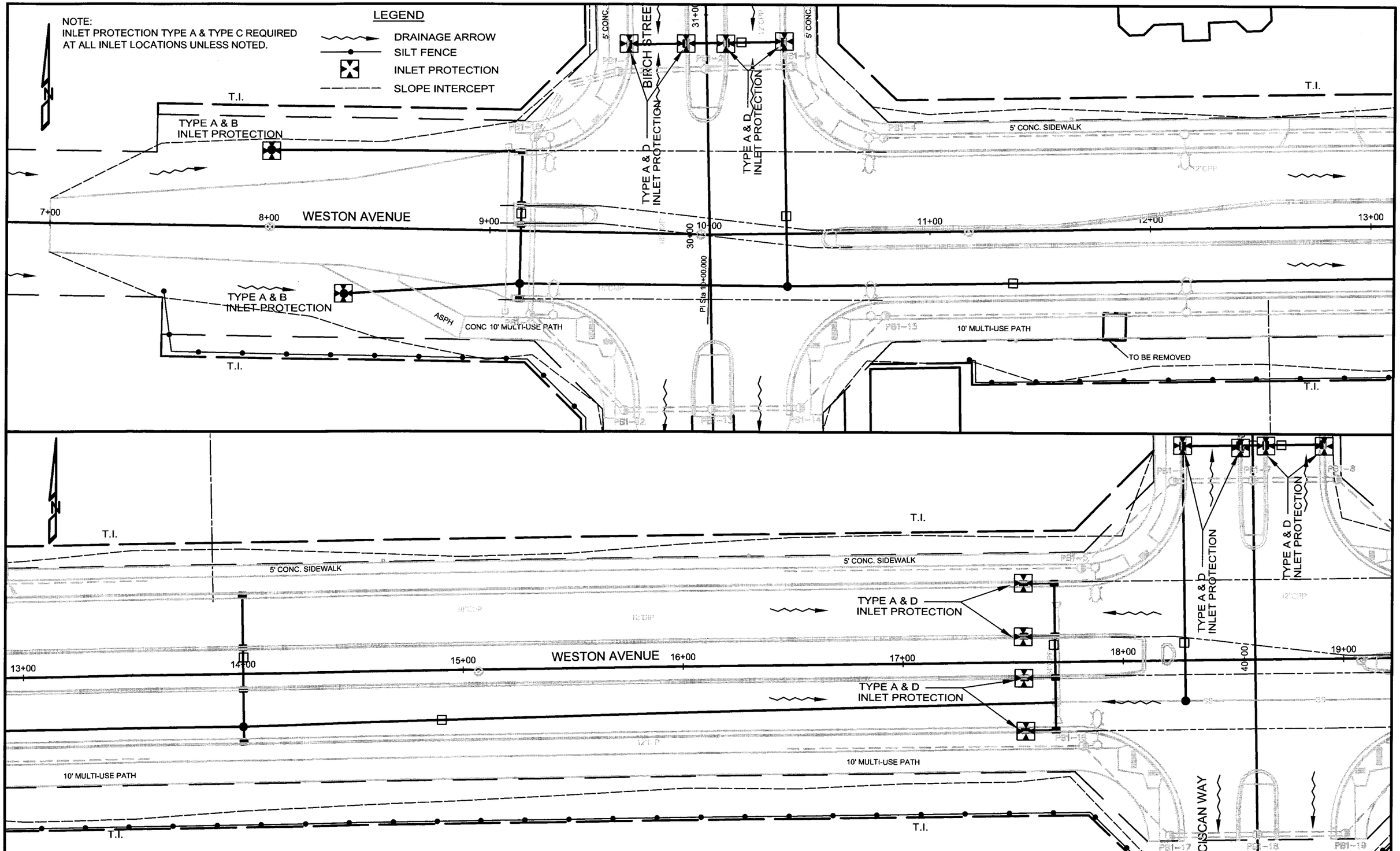

P:\DRAFT\32290200 DOT WESTON AVE\EROSION CONTROL.dwg, Layout1, 4/1/2004 3:05:00 PM

STATE PROJECT NUMBER: 6999-10-75	HWY: WESTON AVENUE	COUNTY: MARATHON	EROSION CONTROL	SHEET NO: 22	E

NOTE:
INLET PROTECTION TYPE A & TYPE C REQUIRED
AT ALL INLET LOCATION UNLESS NOTED.

LEGEND

- DRAINAGE ARROW
- SILT FENCE
- INLET PROTECTION
- SLOPE INTERCEPT

T.I.

5' CONC. SIDEWALK

19+00 20+00 21+00 WESTON AVENUE 22+00 23+00 24+00 25+00

PSI-20

10' MULTI-USE PATH

25+00 WESTON AVENUE 26+00 27+00 28+00 29+00 30+00 31+00

PB2-9 PB2-10 PB2-11 PB2-12 PB2-13 PB2-14 PB2-15 PB2-16 PB2-17 PB2-18

STONE RIDGE DRIVE

50.00

STATE PROJECT NUMBER: 6999-10-75	HWY: WESTON AVENUE	COUNTY: MARATHON	EROSION CONTROL	SHEET NO: 23	E

P:\DRAFT\32290200 DOT WESTON AVE\EROSION CONTROL.dwg, Layout2, 4/1/2004 3:05:17 PM

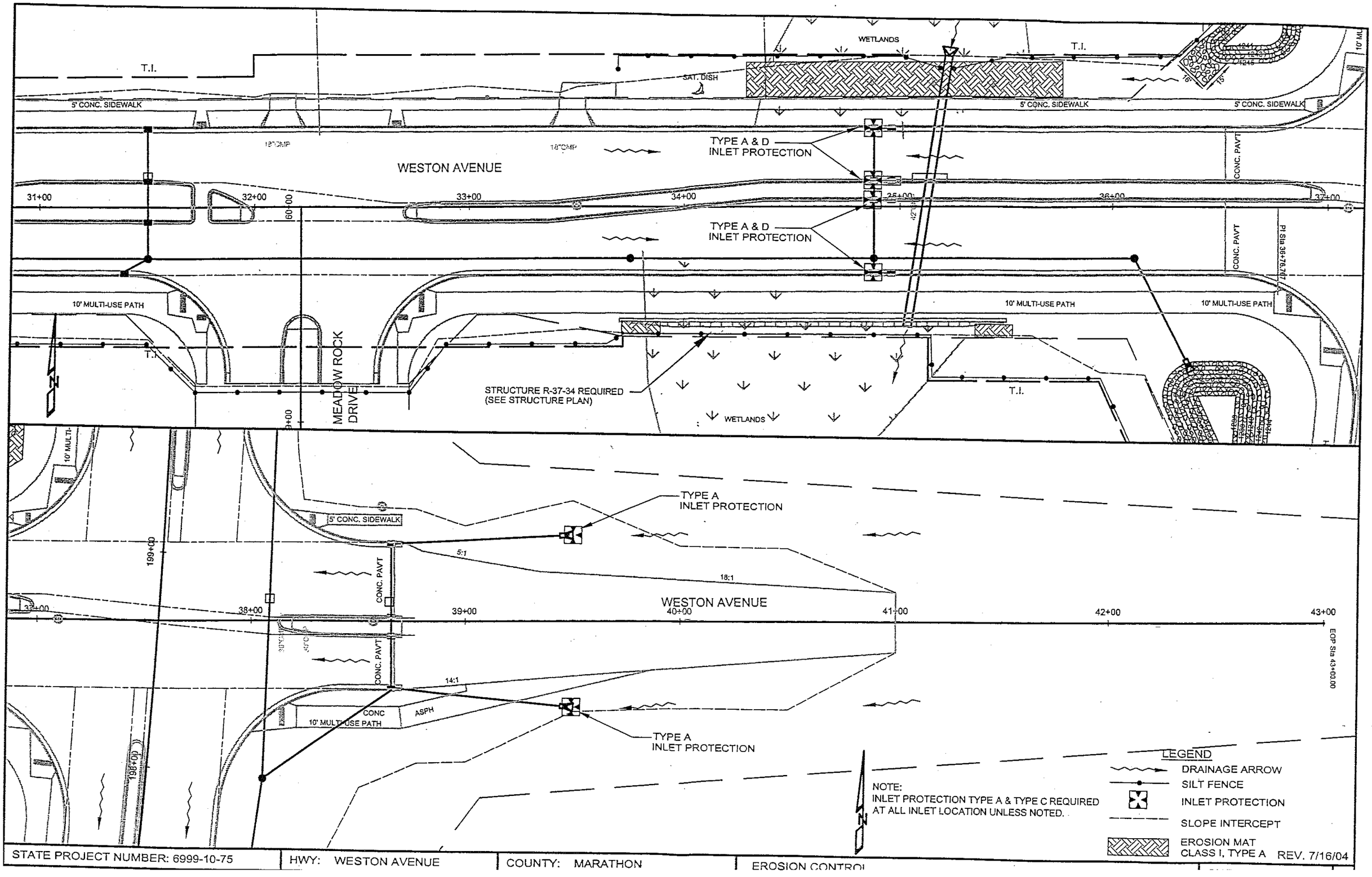

STATE PROJECT NUMBER: 6999-10-75	HWY: WESTON AVENUE	COUNTY: MARATHON	EROSION CONTROL

P:\DRAFT\32290200 DOT WESTON AVE\EROSION CONTROL.dwg, Layout4, 4/1/2004 3:05:54 PM

LEGEND

- DRAINAGE ARROW
- SILT FENCE
- INLET PROTECTION
- SLOPE INTERCEPT
- HEAVY RIPRAP WITH GEOTEXTILE FABRIC, TYPE HR
- EROSION MAT CLASS I, TYPE A

NOTE:
INLET PROTECTION TYPE A & TYPE C REQUIRED AT ALL INLET LOCATION UNLESS NOTED.

RIPRAP 2:1 SLOPES
DETENTION BASIN

EDGE SHOULDER

192+00

193+00

194+00

C.T.H. X

10' MULTI-USE PATH

ASPH.

CONC.

10' MULTI-USE PATH

10' MULTI-USE PATH

195+00

196+00

197+00

EDGE SHOULDER

20'

15'

STATE PROJECT NUMBER: 6999-10-75	HWY: WESTON AVENUE	COUNTY: MARATHON	EROSION CONTROL	SHEET NO: 25	E

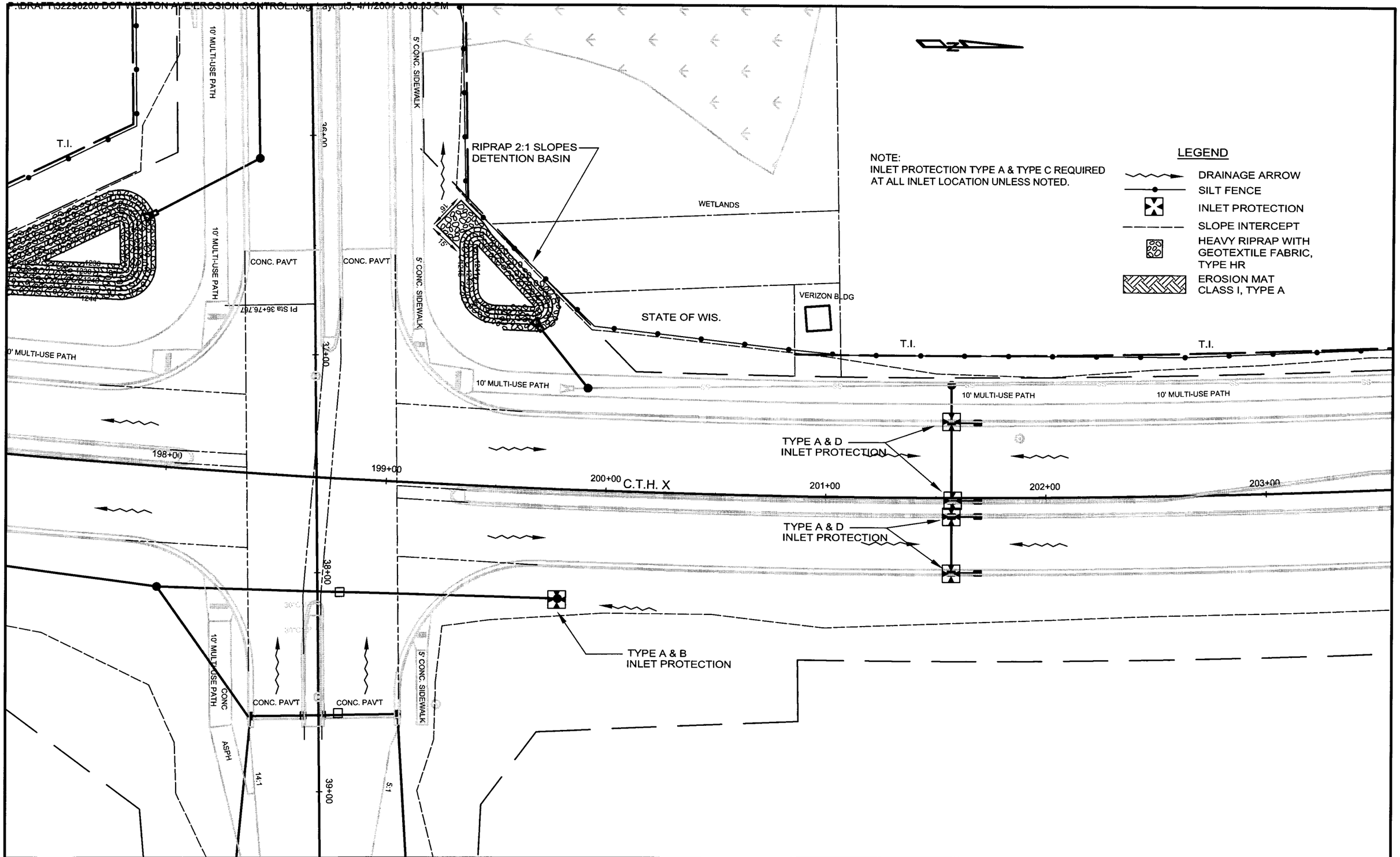

STATE PROJECT NUMBER: 6999-10-75	HWY: WESTON AVENUE	COUNTY: MARATHON	EROSION CONTROL	SHEET NO: 26	E

P:\DRAFT\32290200 DOT WESTON AVE\EROSION CONTROL.dwg, Layout6, 4/1/2004 3:00:18 PM

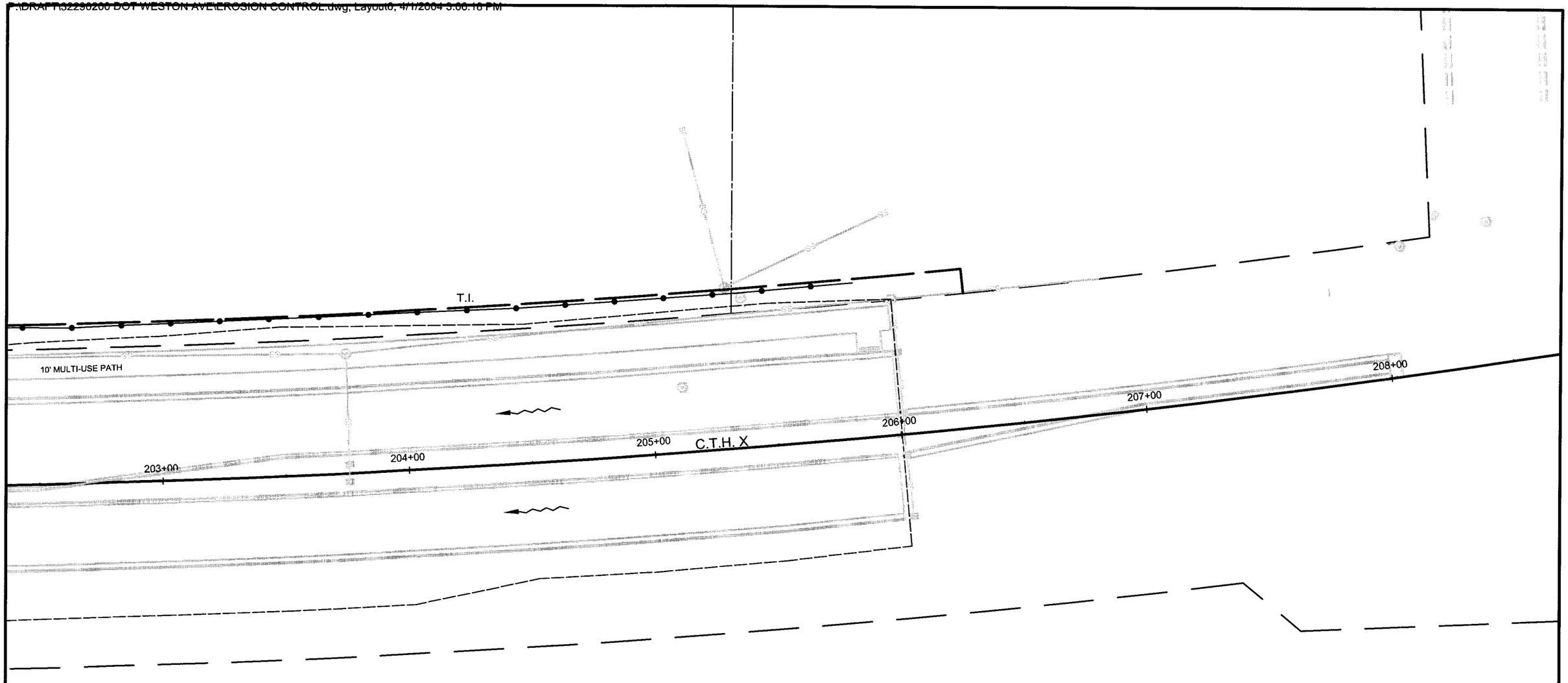

NOTE:
INLET PROTECTION TYPE A & TYPE C REQUIRED AT ALL INLET LOCATION UNLESS NOTED.

LEGEND

- DRAINAGE ARROW
- SILT FENCE
- INLET PROTECTION
- SLOPE INTERCEPT

STATE PROJECT NUMBER: 6999-10-75	HWY: WESTON AVENUE	COUNTY: MARATHON	EROSION CONTROL	SHEET NO: 27	E

STORM SEWER SCHEDULE

WESTON AVENUE CONTINUED

UNIT NO.	STATION	LOCATION	CENTER TO CENTER FEET	TO UNIT	CATCH BASIN TYPE & COVER	MH TYPE & COVER	RIM GRATE ELEVATION	TOP OF STRUCTURE ELEVATION	DEPTH FEET	DISCHARGE PIPE INFORMATION					REMARKS
										SIZE INCHES	INLET ELEVATION	DISCHARGE ELEVATION	LENGTH FEET	SLOPE FT./FT.	
8-D	23+73	36' LT	24	8-C	2-H	-	1276.82	1275.99	4.19	12	1273.30	1273.06	24	0.01	
9	25+87	20' RT	110	10	-	EXIST - J	1274.53	-	-	30 EX	1265.53	1265.22	110	0.0028	
10	26+97	19' RT	363	14	-	EXIST - J	1272.98	-	-	30	1265.22	1255.00	363	0.0282	
10-A	26+97	31' RT	12	10	2-H	-	1272.59	1271.76	4.20	12	1269.06	1268.39	12	0.0558	
10-B	26+97	7' RT	12	10	2-H	-	1272.65	1271.82	4.69	12	1268.63	1268.39	12	0.02	
10-C	26+97	12' LT	19	10-B	2-H	-	1272.65	1271.82	4.50	12	1268.82	1268.63	19	0.01	
10-D	26+97	36' LT	24	10-C	2-H	-	1272.59	1271.76	4.20	12	1269.06	1268.82	24	0.01	
11	27+33	19' RT	-	12	-	ABANDON	-	-	-	-	-	-	-	-	ABANDON
12	27+63	36' LT	49	13	-	ABANDON	-	-	-	-	-	-	-	-	ABANDON
13	27+63	84' LT	-	-	-	3-J	1270.99	1269.74	4.44	30 EX	1265.30	-	-	-	OVER EXISTING STORM SEWER
13-A	27+46	84' LT	17	13	2-H	-	1270.59	1269.76	4.17	12	1267.09	1266.50	17	0.0347	
13-B	27+72	84' LT	9	13	2-H	-	1270.65	1269.82	4.73	12	1266.59	1266.50	9	0.01	
13-C	27+90	84' LT	18	13-B	2-H	-	1270.65	1269.82	4.55	12	1266.77	1266.59	18	0.010	
13-D	28+16	84' LT	26	13-C	2-H	-	1270.59	1269.76	4.23	12	1267.03	1266.77	26	0.010	
14	30+60	24' RT	90	24	-	3-J	1261.18	1259.93	4.93	30	1255.00	1252.18	90	0.0314	
14-A	30+60	31' RT	7	14	2-H	-	1260.86	1260.03	4.17	12	1257.36	1256.59	7	0.010	
14-B	30+60	7' RT	17	14	2-H	-	1260.92	1260.09	4.66	12	1256.93	1256.59	17	0.020	
14-C	30+60	12' LT	15	14-B	2-H	-	1260.84	1260.01	4.43	12	1257.08	1256.93	15	0.010	
14-D	30+60	36' LT	28	14-C	2-H	-	1260.86	1260.03	4.17	12	1257.36	1257.08	28	0.010	
15	33+75	24' RT	113	16	-	3-J	1250.70	1249.45	4.83	36	1244.62	1244.06	113	0.005	
16	34+88	24' RT	122	17	-	3-J	1249.21	1247.96	3.90	36	1244.06	1242.84	122	0.010	
16-A	34+88	31' RT	7	16	2-H	-	1248.91	1248.08	3.42	12	1246.16	1246.06	7	0.0143	
16-B	34+96	31' RT	8	16-A	2-H	-	1248.92	1248.09	3.33	12	1246.26	1246.16	8	0.0125	
16-C	34+88	3' LT	27	16	2-H	-	1248.78	1247.95	3.72	15	1245.73	1245.46	27	0.010	
16-D	34+96	3' LT	8	16-C	2-H	-	1248.77	1247.94	3.41	12	1246.03	1245.93	8	0.0125	
16-E	34+88	12' LT	9	16-C	2-H	-	1248.98	1248.15	3.83	15	1245.82	1245.73	9	0.010	
16-F	34+96	12' LT	8	16-E	2-H	-	1248.97	1248.14	3.52	12	1246.12	1246.02	8	0.0125	
16-G	34+88	36' LT	24	16-E	2-H	-	1248.92	1248.09	3.65	15	1245.94	1245.82	24	0.005	
16-H	34+96	36' LT	8	16-G	2-H	-	1248.91	1248.08	3.34	12	1246.24	1246.14	8	0.0125	
17	36+10	24' RT	58	17-A	-	3-J	1249.91	1248.66	5.82	36	1242.84	1242.00	58	0.0145	
17-A	36+36	76' RT	-	-	AEW	-	-	-	-	36	1242.00	-	-	-	APRON END WALL DISCHARGE
19	38+10	72' RT	350	18	-	3-C	1251.40	1250.15	6.88	42	1242.18	1237.00	350	0.0148	-
19-A	38+65	31' RT	72	19	2-H	-	1251.40	1250.57	5.34	18	1246.73	1245.18	72	0.022	
19-B	38+65	7' RT	24	19-A	2-H	-	1251.46	1250.63	4.66	12	1247.47	1247.23	24	0.010	
19-C	38+65	2' LT	9	19-B	2-H	-	1251.26	1250.43	4.37	12	1247.56	1247.47	9	0.010	
19-D	38+65	36' LT	34	19-C	2-H	-	1251.40	1250.57	4.17	12	1247.90	1247.56	34	0.010	
19-E	39+50	42' RT	85	19-A	AEW	-	-	-	-	12	1250.00	1247.23	85	0.0326	APRON END WALL
19-F	39+50	40' LT	85	19-D	AEW	-	-	-	-	12	1250.00	1247.90	85	0.0247	APRON END WALL
24	31+50	24' RT	225	15	-	3-J	1258.12	1256.87	4.69	30	1252.18	1245.12	225	0.0314	
24-A	31+39	31' RT	13	24	2-H	-	1258.20	1257.37	4.17	12	1254.70	1254.44	13	0.02	
24-B	31+50	7' RT	17	24	2-H	-	1257.88	1257.05	4.66	12	1253.89	1253.72	17	0.01	
24-C	31+50	12' LT	19	24-B	2-H	-	1257.88	1257.05	4.47	12	1254.08	1253.89	19	0.01	
24-D	31+50	36' LT	24	24-C	2-H	-	1257.82	1256.99	4.17	12	1254.32	1254.08	24	0.01	

STORM SEWER SCHEDULE

WESTON AVENUE CONTINUED

UNIT NO.	STATION	LOCATION	CENTER TO CENTER FEET	TO UNIT	CATCH BASIN TYPE & COVER	MH TYPE & COVER	RIM GRATE ELEVATION	TOP OF STRUCTURE ELEVATION	DEPTH FEET	DISCHARGE PIPE INFORMATION					REMARKS
										SIZE INCHES	INLET ELEVATION	DISCHARGE ELEVATION	LENGTH FEET	SLOPE FT./FT.	
8-D	23+73	36' LT	24	8-C	2-H	-	1276.82	1275.99	4.19	12	1273.30	1273.06	24	0.01	
9	25+87	20' RT	110	10	-	EXIST - J	1274.53	-	-	30 EX	1265.53	1265.22	110	0.0028	
10	26+97	19' RT	363	14	-	EXIST - J	1272.98	-	-	30	1265.22	1255.00	363	0.0282	
10-A	26+97	31' RT	12	10	2-H	-	1272.59	1271.76	4.20	12	1269.06	1268.39	12	0.0558	
10-B	26+97	7' RT	12	10	2-H	-	1272.65	1271.82	4.69	12	1268.63	1268.39	12	0.02	
10-C	26+97	12' LT	19	10-B	2-H	-	1272.65	1271.82	4.50	12	1268.82	1268.63	19	0.01	
10-D	26+97	36' LT	24	10-C	2-H	-	1272.59	1271.76	4.20	12	1269.06	1268.82	24	0.01	
11	27+33	19' RT	-	12	-	ABANDON	-	-	-	-	-	-	-	-	ABANDON
12	27+63	36' LT	49	13	-	ABANDON	-	-	-	-	-	-	-	-	ABANDON
13	27+63	84' LT	-	-	-	3-J	1270.99	1269.74	4.44	30 EX	1265.30	-	-	-	OVER EXISTING STORM SEWER
13-A	27+46	84' LT	17	13	2-H	-	1270.59	1269.76	4.17	12	1267.09	1266.50	17	0.0347	
13-B	27+72	84' LT	9	13	2-H	-	1270.65	1269.82	4.73	12	1266.59	1266.50	9	0.01	
13-C	27+90	84' LT	18	13-B	2-H	-	1270.65	1269.82	4.55	12	1266.77	1266.59	18	0.010	
13-D	28+16	84' LT	26	13-C	2-H	-	1270.59	1269.76	4.23	12	1267.03	1266.77	26	0.010	
14	30+60	24' RT	315	15	-	3-J	1261.18	1259.93	4.93	30	1255.00	1245.12	315	0.0314	
14-A	30+60	31' RT	7	14	2-H	-	1260.86	1260.03	4.17	12	1257.36	1256.59	7	0.010	
14-B	30+60	7' RT	17	14	2-H	-	1260.92	1260.09	4.66	12	1256.93	1256.59	17	0.020	
14-C	30+60	12' LT	15	14-B	2-H	-	1260.84	1260.01	4.43	12	1257.08	1256.93	15	0.010	
14-D	30+60	36' LT	28	14-C	2-H	-	1260.86	1260.03	4.17	12	1257.36	1257.08	28	0.010	
15	33+75	24' RT	113	16	-	3-J	1250.70	1249.45	4.83	36	1244.62	1244.06	113	0.005	
16	34+88	24' RT	122	17	-	3-J	1249.21	1247.96	3.90	36	1244.06	1242.84	122	0.010	
16-A	34+88	31' RT	7	16	2-H	-	1248.91	1248.08	3.42	12	1246.16	1246.06	7	0.0143	
16-B	34+96	31' RT	8	16-A	2-H	-	1248.92	1248.09	3.33	12	1246.26	1246.16	8	0.0125	
16-C	34+88	3' LT	27	16	2-H	-	1248.78	1247.95	3.72	15	1245.73	1245.46	27	0.010	
16-D	34+96	3' LT	8	16-C	2-H	-	1248.77	1247.94	3.41	12	1246.03	1245.93	8	0.0125	
16-E	34+88	12' LT	9	16-C	2-H	-	1248.98	1248.15	3.83	15	1245.82	1245.73	9	0.010	
16-F	34+96	12' LT	8	16-E	2-H	-	1248.97	1248.14	3.52	12	1246.12	1246.02	8	0.0125	
16-G	34+88	36' LT	24	16-E	2-H	-	1248.92	1248.09	3.65	15	1245.94	1245.82	24	0.005	
16-H	34+96	36' LT	8	16-G	2-H	-	1248.91	1248.08	3.34	12	1246.24	1246.14	8	0.0125	
17	36+10	24' RT	58	17-A	-	3-J	1249.91	1248.66	5.82	36	1242.84	1242.00	58	0.0145	
17-A	36+36	76' RT	-	-	AEW	-	-	-	-	36	1242.00	-	-	-	APRON END WALL DISCHARGE
19	38+10	72' RT	350	18	-	3-C	1251.40	1250.15	6.88	42	1242.18	1237.00	350	0.0148	
19-A	38+65	31' RT	72	19	2-H	-	1251.40	1250.57	5.34	18	1246.73	1245.18	72	0.022	
19-B	38+65	7' RT	24	19-A	2-H	-	1251.46	1250.63	4.66	12	1247.47	1247.23	24	0.010	
19-C	38+65	2' LT	9	19-B	2-H	-	1251.26	1250.43	4.37	12	1247.56	1247.47	9	0.010	
19-D	38+65	36' LT	34	19-C	2-H	-	1251.40	1250.57	4.17	12	1247.90	1247.56	34	0.010	
19-E	39+50	42' RT	85	19-A	AEW	-	-	-	-	12	1250.00	1247.23	85	0.0326	APRON END WALL
19-F	39+50	40' LT	85	19-D	AEW	-	-	-	-	12	1250.00	1247.90	85	0.0247	APRON END WALL

STORM SEWER SCHEDULE

C.T.H. X

UNIT NO.	STATION	LOCATION	CENTER TO CENTER FEET	TO UNIT	CATCH BASIN TYPE & COVER	MH TYPE & COVER	RIM GRATE ELEVATION	TOP OF STRUCTURE ELEVATION	DEPTH FEET	DISCHARGE PIPE INFORMATION					REMARKS
										SIZE INCHES	INLET ELEVATION	DISCHARGE ELEVATION	LENGTH FEET	SLOPE FT./FT.	
18	194+55	46.5' RT	50	18-A	-	3-J	1245.00	1243.75	6.75	42 ALT	1237.00	1236.50	50	0.010	
18-A	194+00	47' RT	-	-	AEW	-	-	-	-	42	1236.50	-	-	-	APRON END WALL DISCHARGE
18-B	194+55	34.5' RT	12	18	2-H	-	1243.79	1242.96	4.81	12	1239.65	1239.53	12	0.010	
18-C	194+55	7.5' RT	27	18-B	2-H	-	1243.85	1243.02	4.61	12	1239.91	1239.65	27	0.0096	
18-D	194+55	7.5' LT	15	18-C	2-H	-	1243.85	1243.02	4.49	12	1240.03	1239.91	15	0.0080	
18-E	194+55	34.5' LT	27	18-D	2-H	-	1243.79	1242.96	4.17	12	1240.29	1240.03	27	0.0096	
19	198+00	55' RT	350	18	-	3-C	1251.40	1250.15	6.88	42 ALT	1242.18	1237.00	350	0.0148	
21	198+80	50' RT	182	19	-	3-C	1251.00	1249.75	5.75	42	1244.00	1242.18	182	0.010	
22	199+90	47' LT	40	22-A	-	3-J	1251.26	1250.01	6.46	24	1243.55	1243.00	40	0.0137	
22-A	199+63	78' LT	-	-	AEW	-	-	-	-	24	1243.00	-	-	-	APRON END WALL DISCHARGE
23	201+57	53' LT	-	-	-	3-J	1250.39	1249.14	4.94	24 EX	1244.20	-	-	-	OVER EXISTING STORM SEWER
23-A	201+57	36' LT	17	23	2-H	-	1249.34	1248.51	4.64	15	1245.37	1245.20	17	0.01	
23-B	201+69	36' LT	12	23-A	2-H	-	1249.33	1248.50	4.28	12	1245.74	1245.62	12	0.01	
23-C	201+57	1.5' RT	37.5	23-A	2-H	-	1249.14	1248.31	4.08	15	1245.73	1245.37	37.5	0.0096	
23-D	201+69	1.5' RT	12	23-C	2-H	-	1249.13	1248.30	3.72	12	1246.10	1245.98	12	0.01	
23-E	201+57	8.5' RT	7	23-C	2-H	-	1249.40	1248.57	4.27	15	1245.80	1245.73	7	0.01	
23-F	201+69	8.5' RT	12	23-E	2-H	-	1249.39	1248.56	3.91	12	1246.17	1246.05	12	0.01	
23-G	201+57	34.5' RT	26	23-E	2-H	-	1249.34	1248.51	3.95	15	1246.06	1245.80	26	0.01	
23-H	201+69	34.5' RT	12	23-G	2-H	-	1249.33	1248.50	3.59	12	1246.43	1246.31	12	0.01	

NOTES: ALL INLETS AND MANHOLES SHALL RECEIVE NEW FRAMES AND COVERS, ADJUSTMENTS TO 6 INCHES SHALL BE INCLUDED.
ALL INLETS SHALL BE DEPRESSED 1 INCH BELOW THE NORMAL GUTTER FLOWLINE.
DEPRESSED GRATE ELEVATION IS 0.20' BELOW EDGE OF PAVEMENT AT INLET LOCATION.
DEPTH DOES NOT INCLUDE FRAME OR 5 INCHES OF ADJUSTMENT.
EX= EXISTING
ALT= ALTERNATIVE STORM SEWER PIPE, ITEM 607.0600.S
AEW= APRON END WALL

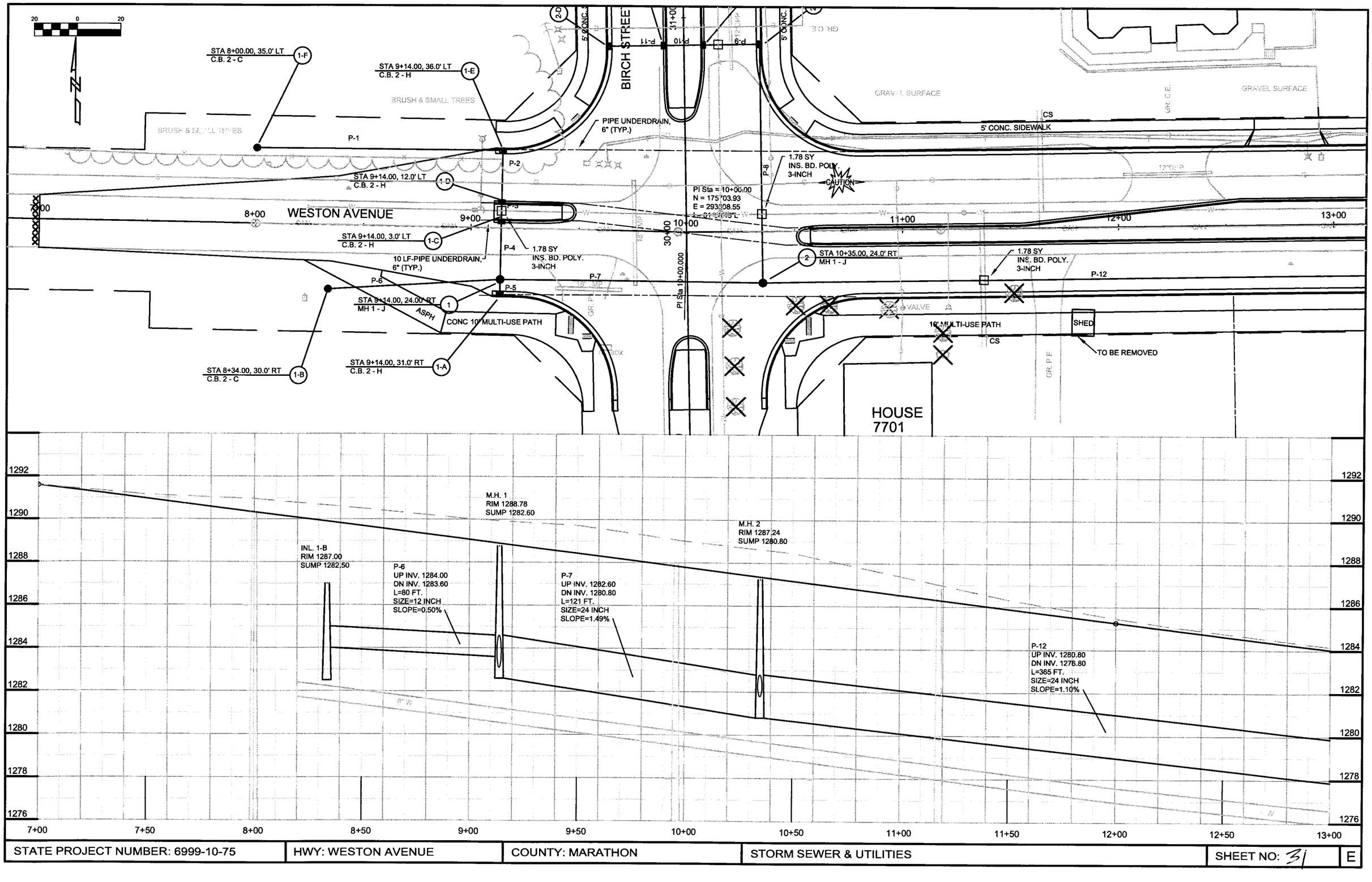

STATE PROJECT NUMBER: 6999-10-75	HWY: WESTON AVENUE	COUNTY: MARATHON	STORM SEWER & UTILITIES	SHEET NO: 31	E

P:\DRAFT\32290200 WDOT\RCp21001.dwg, Layout1, 04/01/2004 02:47:19 PM

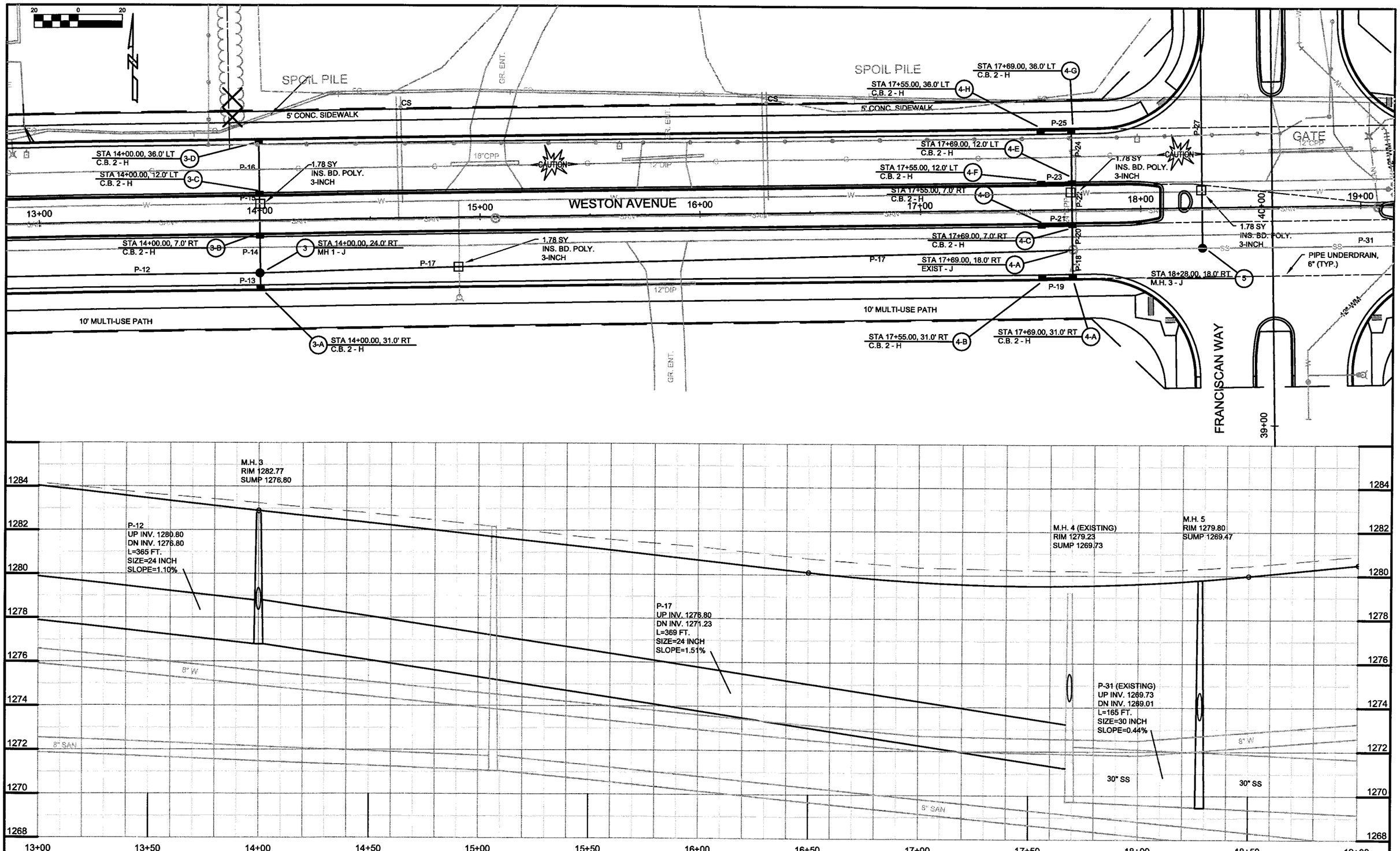

STATE PROJECT NUMBER: 6999-10-75	HWY: WESTON AVENUE	COUNTY: MARATHON	STORM SEWER & UTILITIES	SHEET NO: 32	E

P:\DRAFT\32290200 WDOT\RCp22001.dwg, Layout1, 04/01/2004 03:05:03 PM

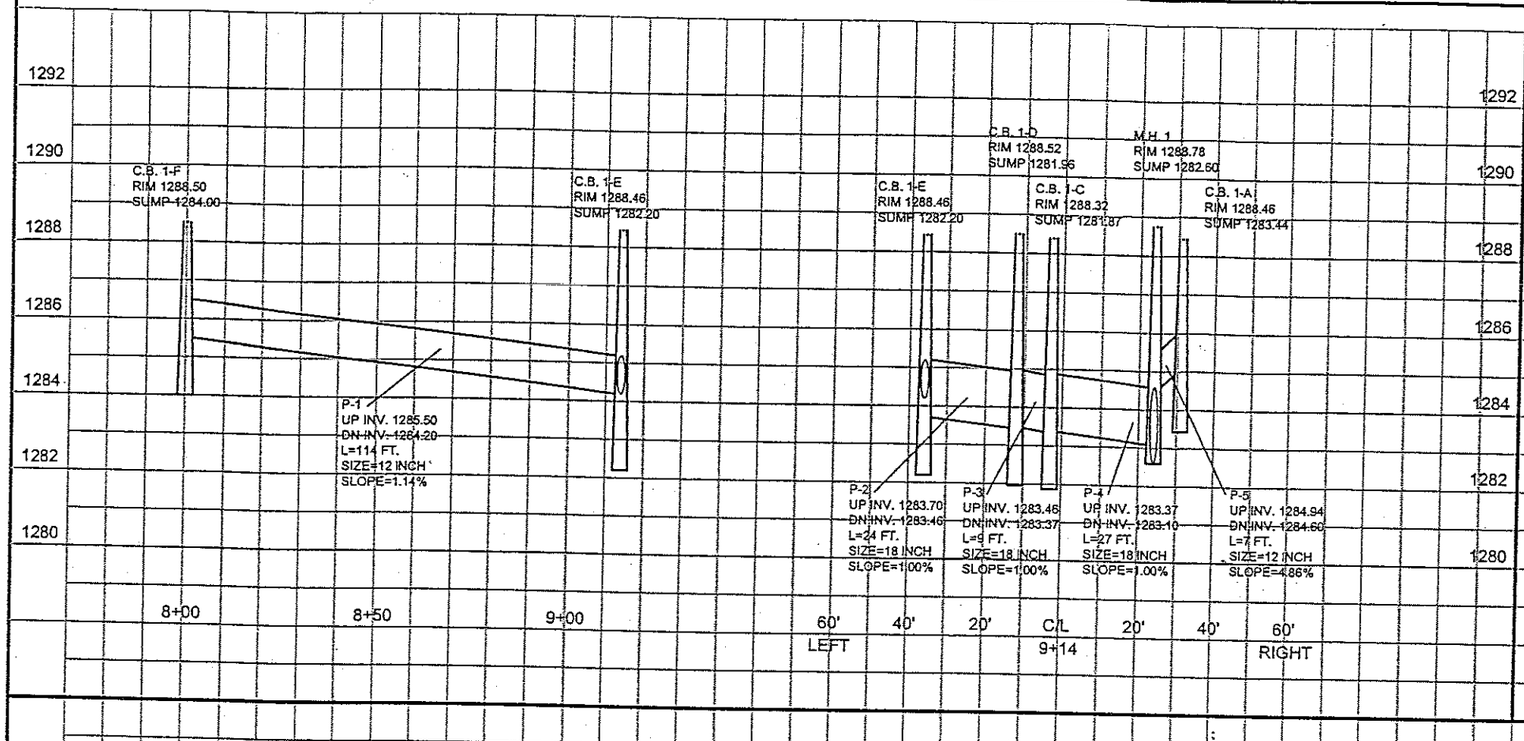

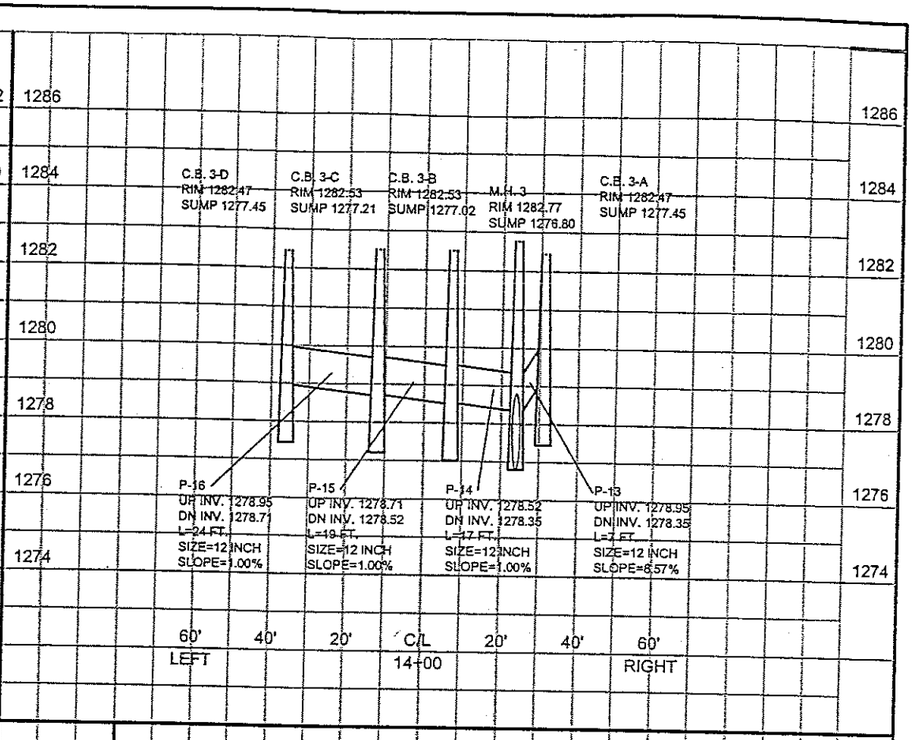

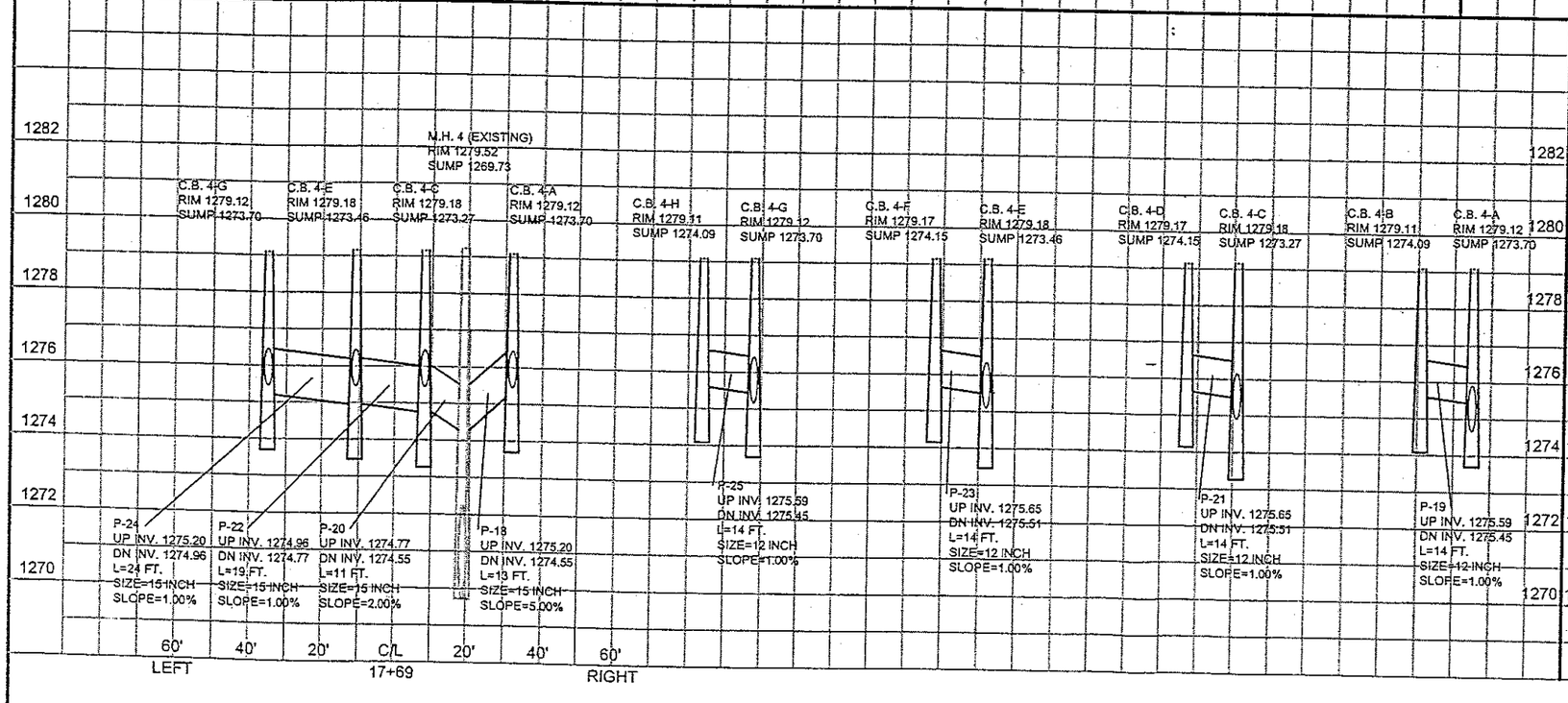

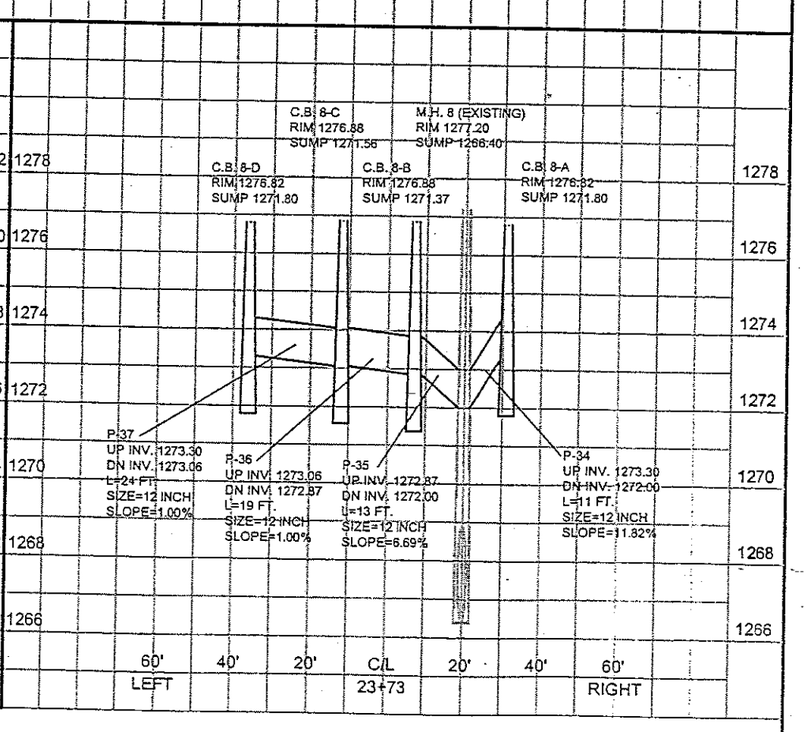

STATE PROJECT NUMBER: 6999-10-75	HWY: WESTON AVENUE	COUNTY: MARATHON	STORM SEWER & UTILITIES	REV. 7/16/04
				SHEET NO: 33

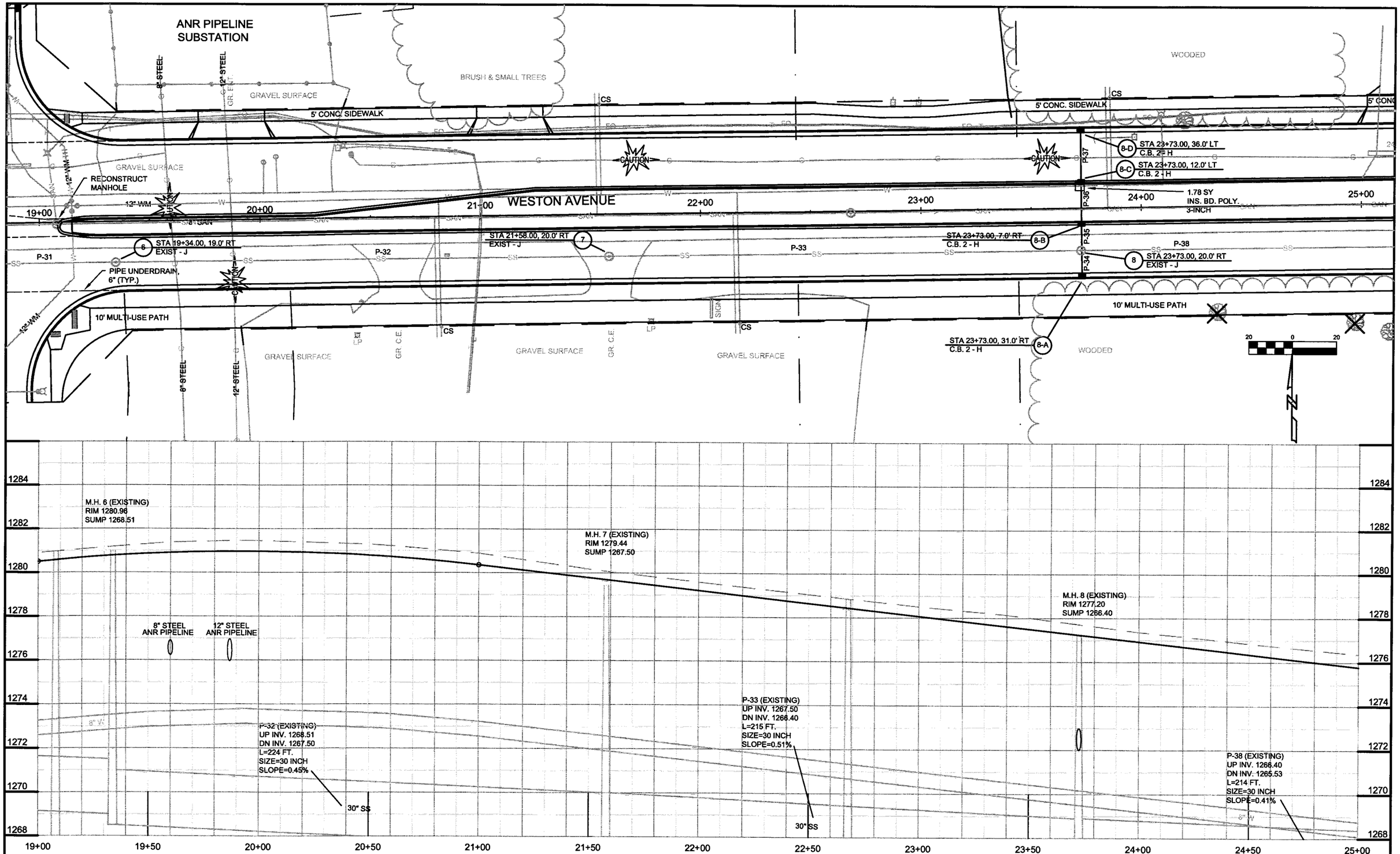

STATE PROJECT NUMBER: 6999-10-75	HWY: WESTON AVENUE	COUNTY: MARATHON	STORM SEWER & UTILITIES	SHEET NO: 34	E

P:\DRAFT\32290200 WDOT\RCp23001.dwg, Layout1, 04/01/2004 02:49:43 PM

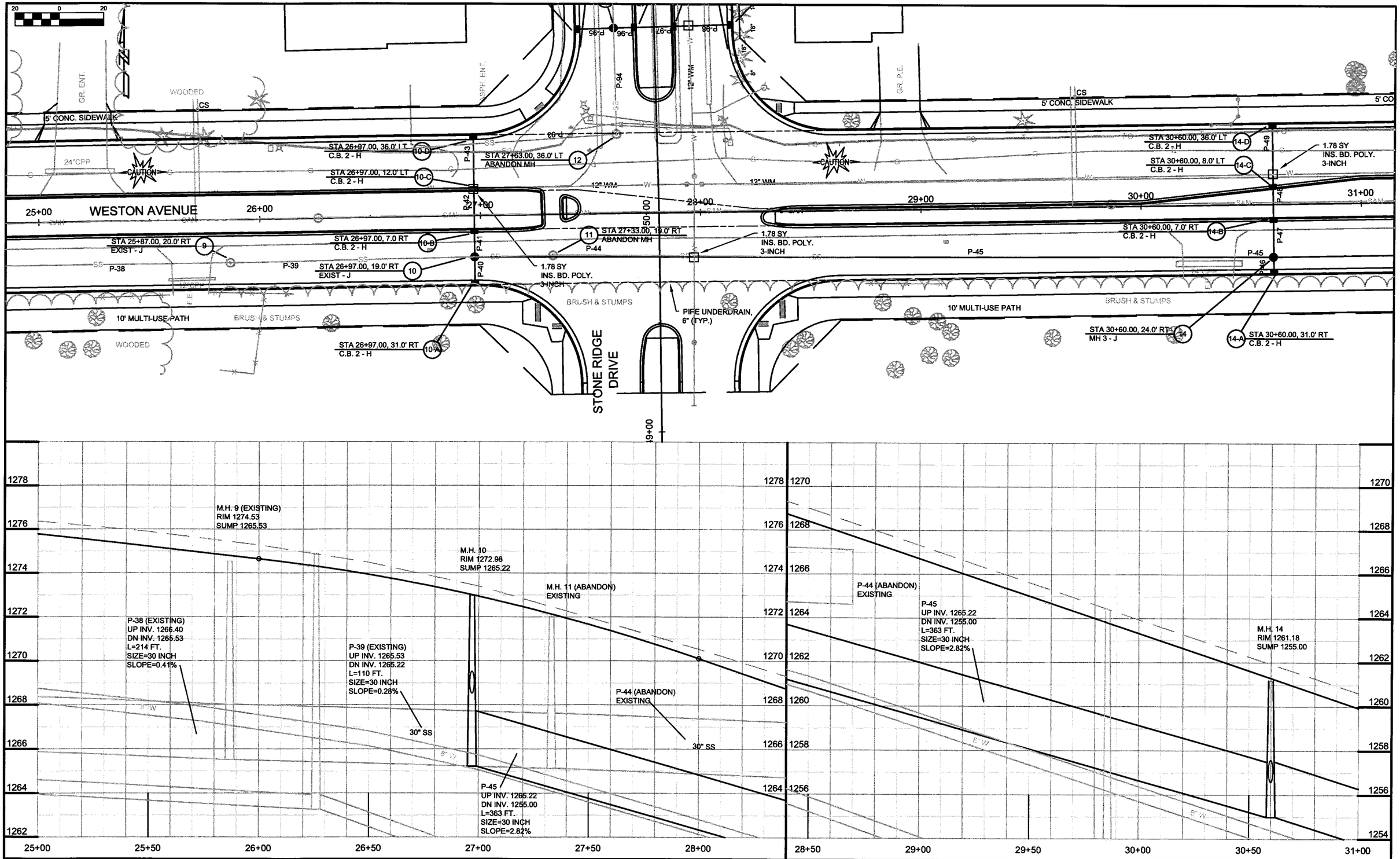

STATE PROJECT NUMBER: 6999-10-75	HWY: WESTON AVENUE	COUNTY: MARATHON	STORM SEWER & UTILITIES	SHEET NO: 35	E

P:\DRAFT\32290200 WDOT\RCp24001.dwg, Layout1, 04/01/2004 02:50:57 PM

20 0 20

5' CONC. SIDEWALK
CS
GR. P.E.
ASPH. P.E.
SAT. DISH
WOODED
WETLANDS
CONC PLANTER
STA 34+88.00, 36.0' LT C.B. 2 - H 16-G
STA 34+96.00, 36.0' LT C.B. 2 - H 16-H
P-59
STA 31+50.00, 36.0' LT C.B. 2 - H 24-D
P-102
CAUTION
1.78 SY INS. BD. POLY. 3-INCH
18" CMP
15" CMP
WESTON AVENUE
RECONSTRUCT MANHOLE
STA 31+50.00, 12.0' LT C.B. 2 - H 24-C
STA 34+88.00, 12.0' LT C.B. 2 - H 16-E
STA 34+96.00, 12.0' LT C.B. 2 - H 16-F
P-57
P-55
P-56
P-58
12" W
CONC. PAVT
PI Sta = 36+76.77
N = 175748.65
E = 296284.95
I = 00°16'41"R
31+00
32+00
33+00
34+00
35+00
36+00
37+00
60.00
STA 31+50.00, 7.0' RT C.B. 2 - H 24-B
P-101
24 STA 31+50.00, 24.0' RT MH 3 - J
STA 34+96.00, 3.0' LT C.B. 2 - H 16-D
5.34 SY INS. BD. POLY. 3-INCH
STA 34+88.00, 3.0' LT C.B. 2 - H 16-C
STA 36+10.00, 24.0' RT MH 3 - J 17
5.34 SY INS. BD. POLY. 3-INCH
P-50
P-100
P-99
P-51
P-54
P-60
STA 31+39.00, 31.0' RT C.B. 2 - H 24-A
P-52
P-53
15 STA 33+75.00, 24.0' RT MH 3 - J
10' MULTI-USE PATH
BRUSH & STUMPS
STA 34+88.00, 31.0' RT C.B. 2 - H 16-A
STA 34+96.00, 31.0' RT C.B. 2 - H 16-B
16 STA 34+88.00, 24.0' RT MH 3 - J
P-61
STA 36+36.00, 76.0' RT 36" IRON ENDWALL VANE GRATE 17-A
MEADOW ROCK DRIVE
STRUCTURE R-37-34 REQUIRED (SEE STRUCTURE PLAN)

M.H. 24
RIM 1258.12
SUMP 1252.18

P-50
UP INV. 1255.00
DN INV. 1252.18
L=90 FT.
SIZE=30 INCH
SLOPE=3.13%

P-99
UP INV. 1252.18
DN INV. 1245.12
L=225 FT.
SIZE=30 INCH
SLOPE=3.14%

M.H. 15
RIM 1250.70
SUMP 1244.62

STRUCTURE R-37-34 REQUIRED (SEE STRUCTURE PLAN)

P-51
UP INV. 1244.62
DN INV. 1244.06
L=113 FT.
SIZE=36 INCH
SLOPE=0.50%

M.H. 16
RIM 1249.21
SUMP 1244.06

P-60
UP INV. 1244.06
DN INV. 1242.84
L=122 FT.
SIZE=36-INCH
SLOPE=1.00%

M.H. 17
RIM 1250.24
SUMP 1242.34

STA. 35+12
1 - 29" X 45" RCCP REQ'D
SKEW 8° L.H.F.

1260 1258 1256 1254 1252 1250 1248 1246 1244
1260 1254 1258 1252 1256 1250 1254 1248 1252 1246 1250 1244 1248 1242 1246 1240
1254 1252 1250 1248 1246 1244 1242 1240 1238
31+00 31+50 32+00 32+50 33+00 33+50 34+00 34+50 35+00 35+50 36+00 36+50 37+00

STATE PROJECT NUMBER: 6999-10-75	HWY: WESTON AVENUE	COUNTY: MARATHON	STORM SEWER & UTILITIES	REV. 7/16/04	SHEET NO: 36

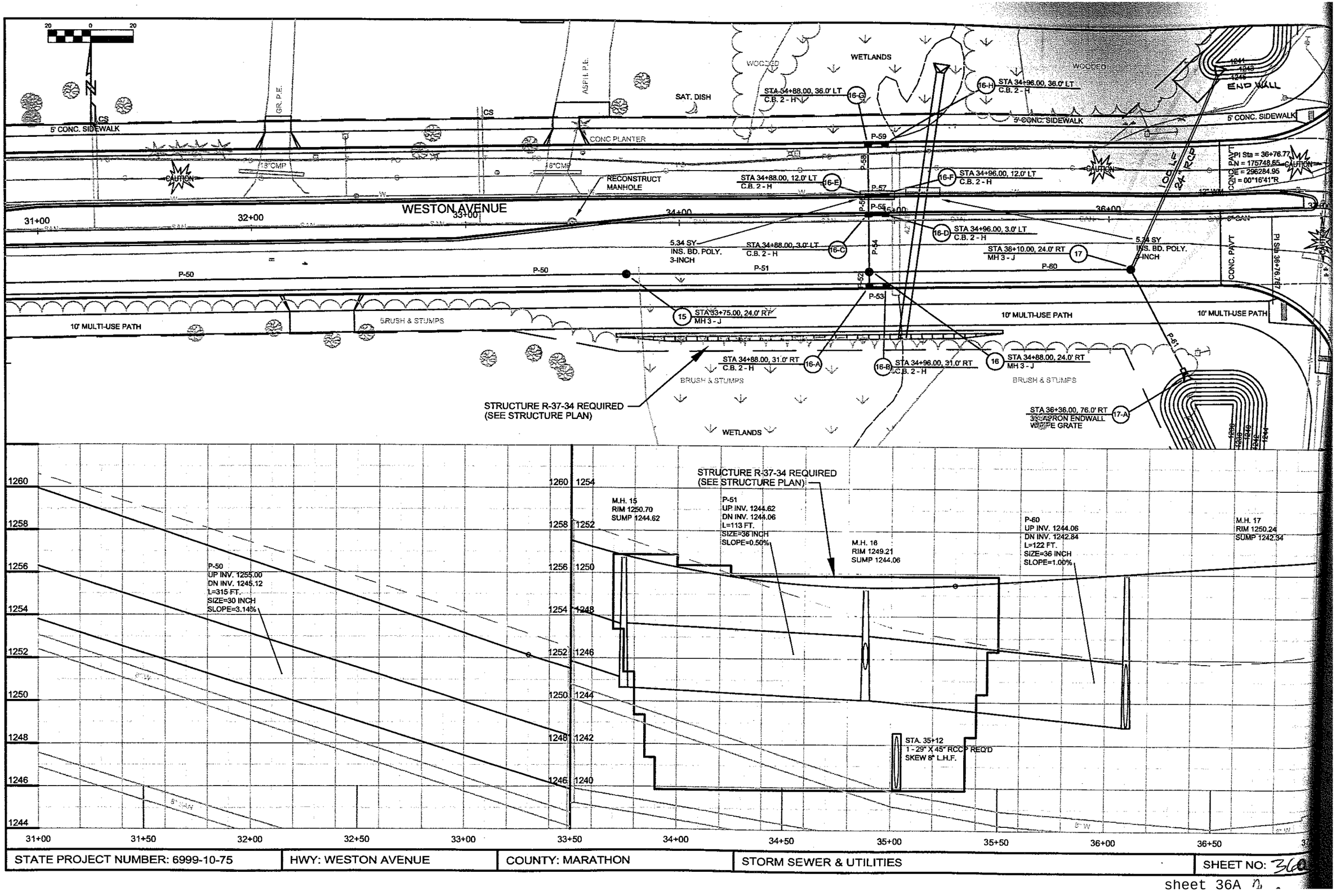

STATE PROJECT NUMBER: 6999-10-75	HWY: WESTON AVENUE	COUNTY: MARATHON	STORM SEWER & UTILITIES	SHEET NO: 36

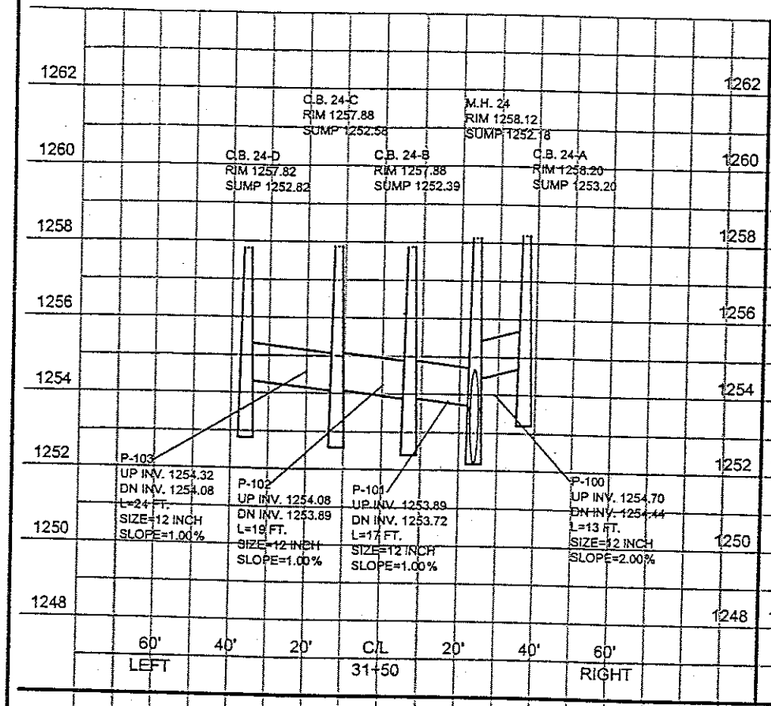

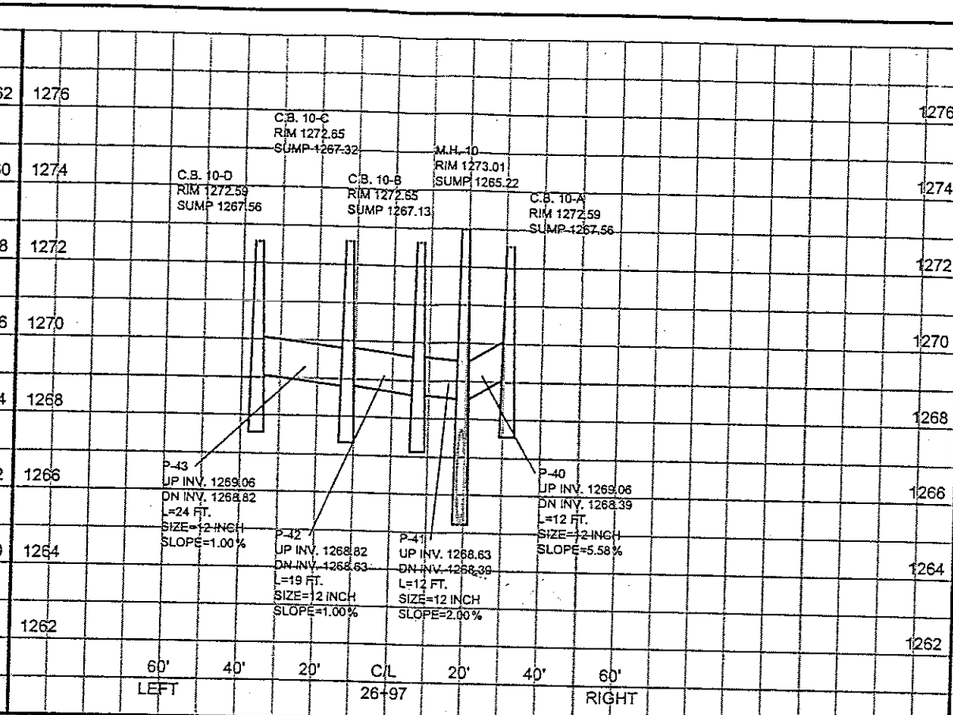

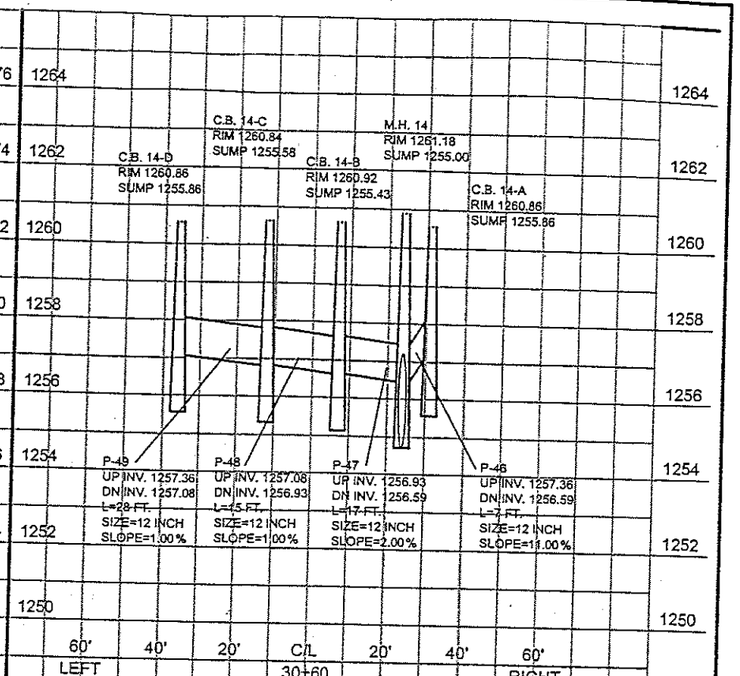

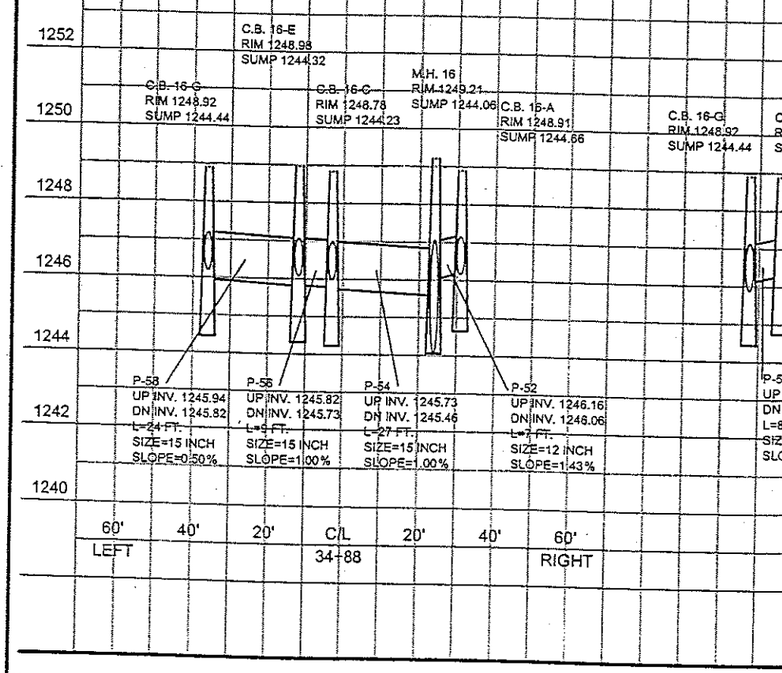

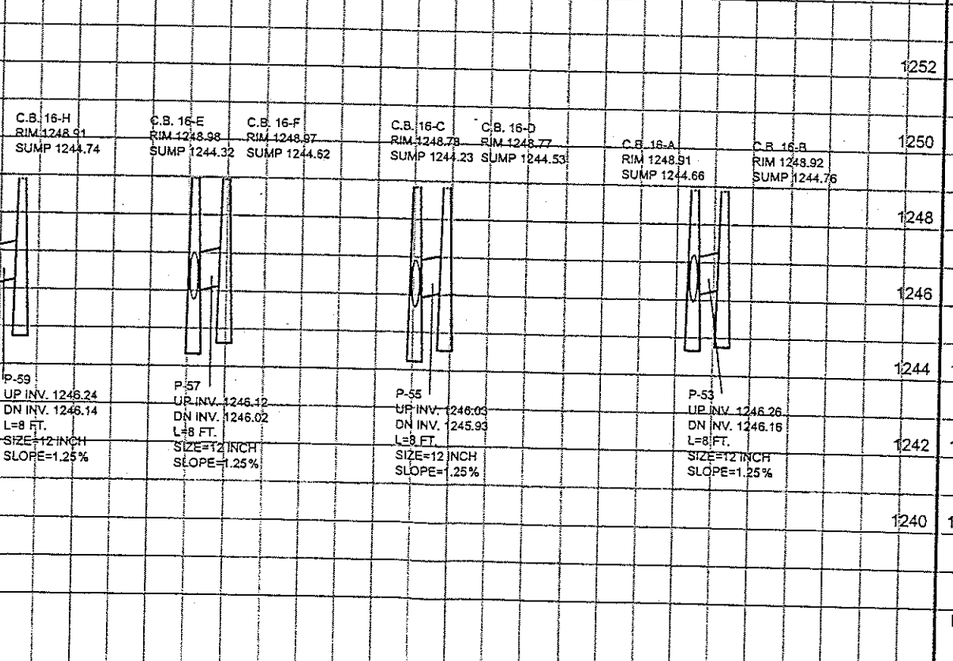

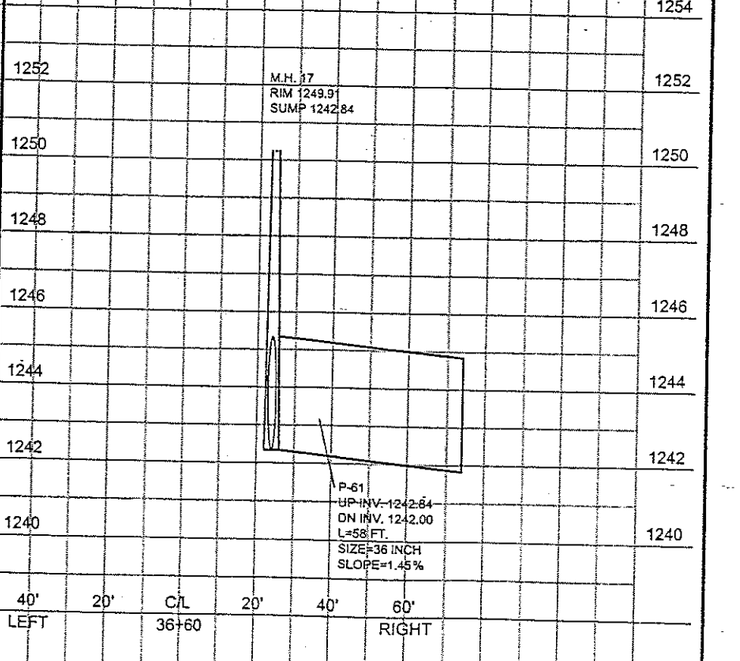

STATE PROJECT NUMBER: 6999-10-75	HWY: WESTON AVENUE	COUNTY: MARATHON	STORM SEWER & UTILITIES

REV. 7/16/04

SHEET NO: 37

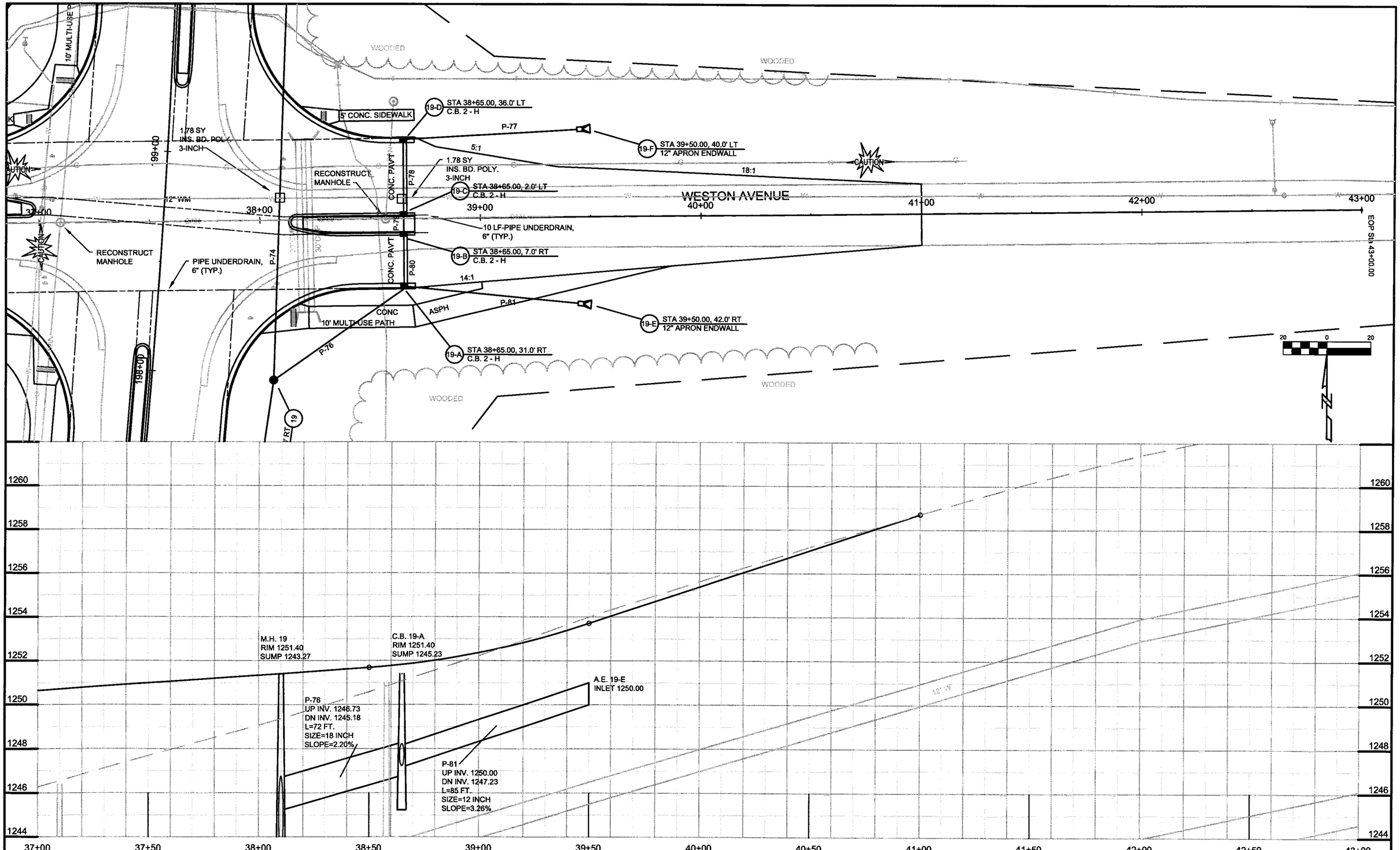

STATE PROJECT NUMBER: 6999-10-75	HWY: WESTON AVENUE	COUNTY: MARATHON	STORM SEWER & UTILITIES	SHEET NO: 38	E

P:\DRAFT\32290200 WDOT\RCp26001.dwg, Layout1, 04/01/2004 02:52:34 PM

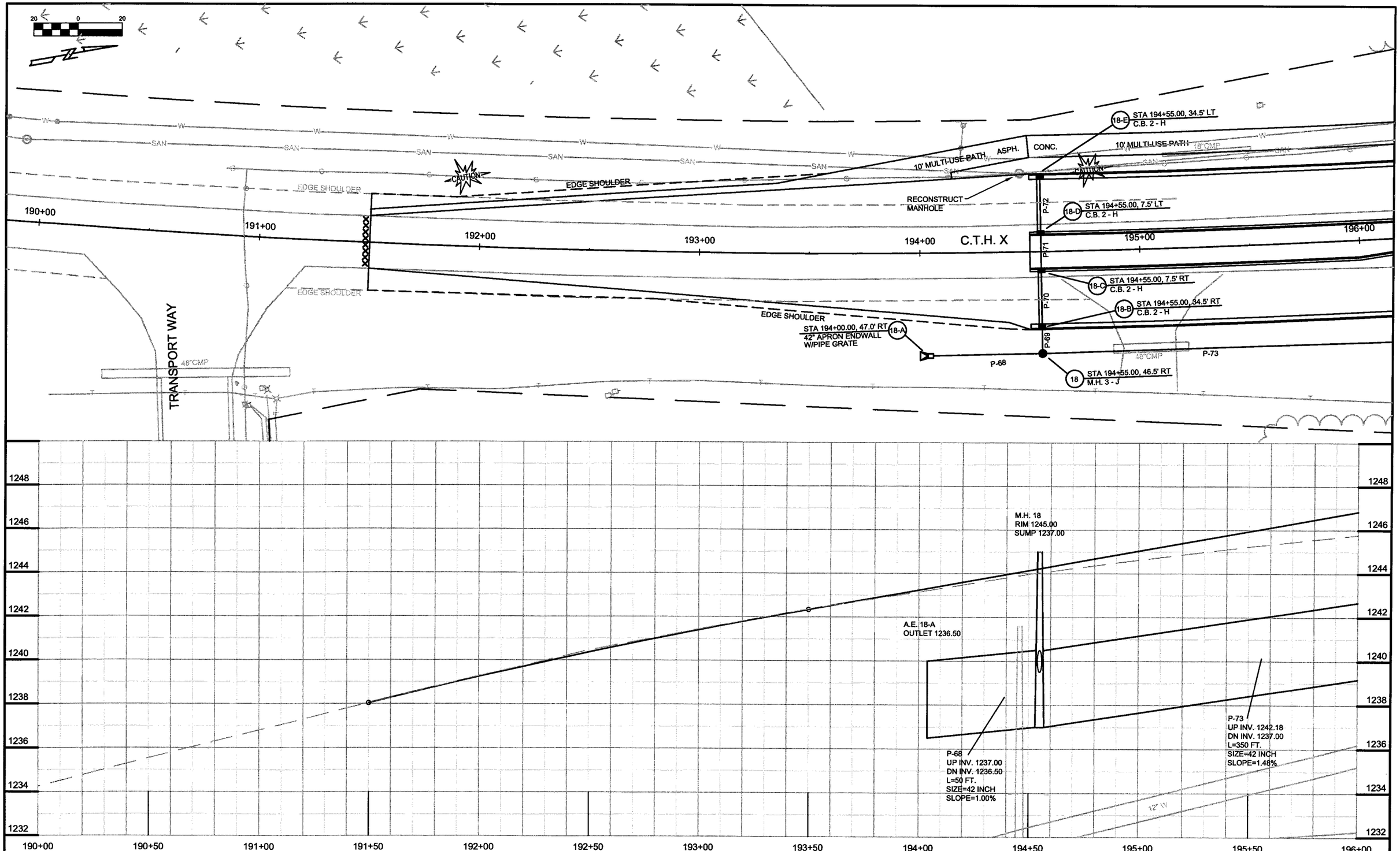

STATE PROJECT NUMBER: 6999-10-75	HWY: WESTON AVENUE	COUNTY: MARATHON	STORM SEWER & UTILITIES	SHEET NO: 39	E

P:\DRAFT\32290200 WDOT\RCp04007.dwg, Layout1, 04/01/2004 02:53:12 PM

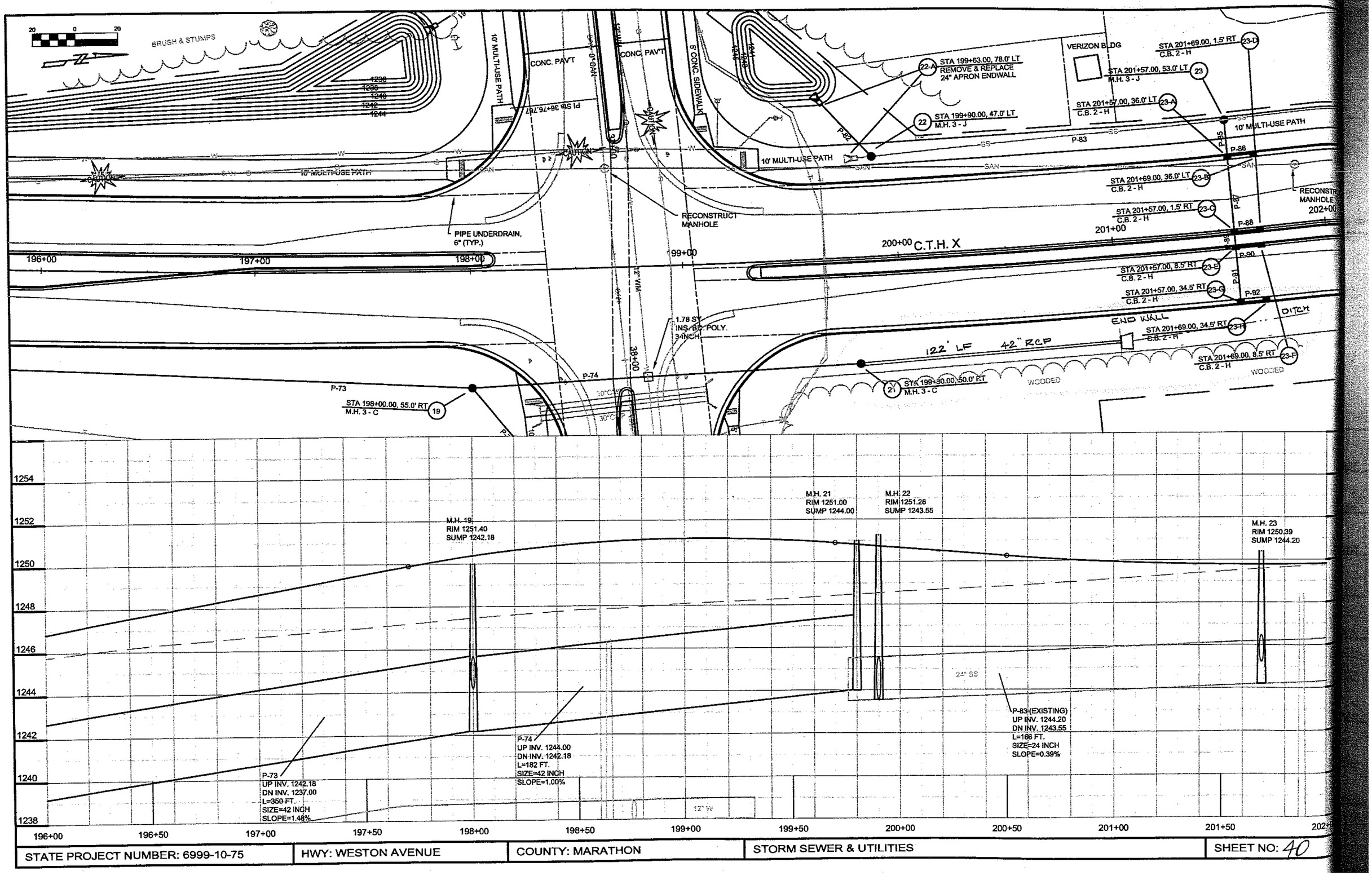

STATE PROJECT NUMBER: 6999-10-75	HWY: WESTON AVENUE	COUNTY: MARATHON	STORM SEWER & UTILITIES	SHEET NO: 40

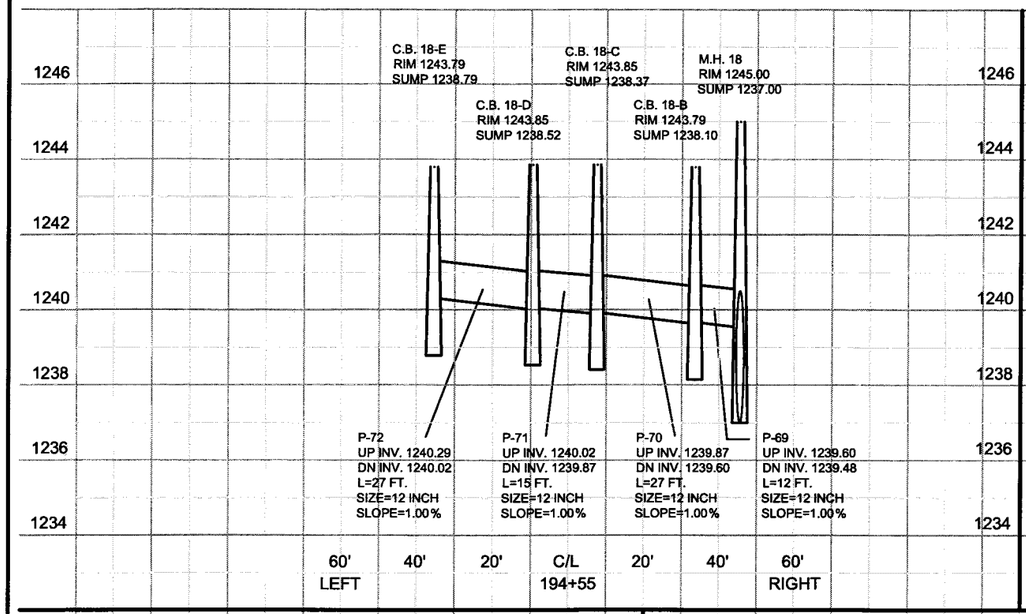

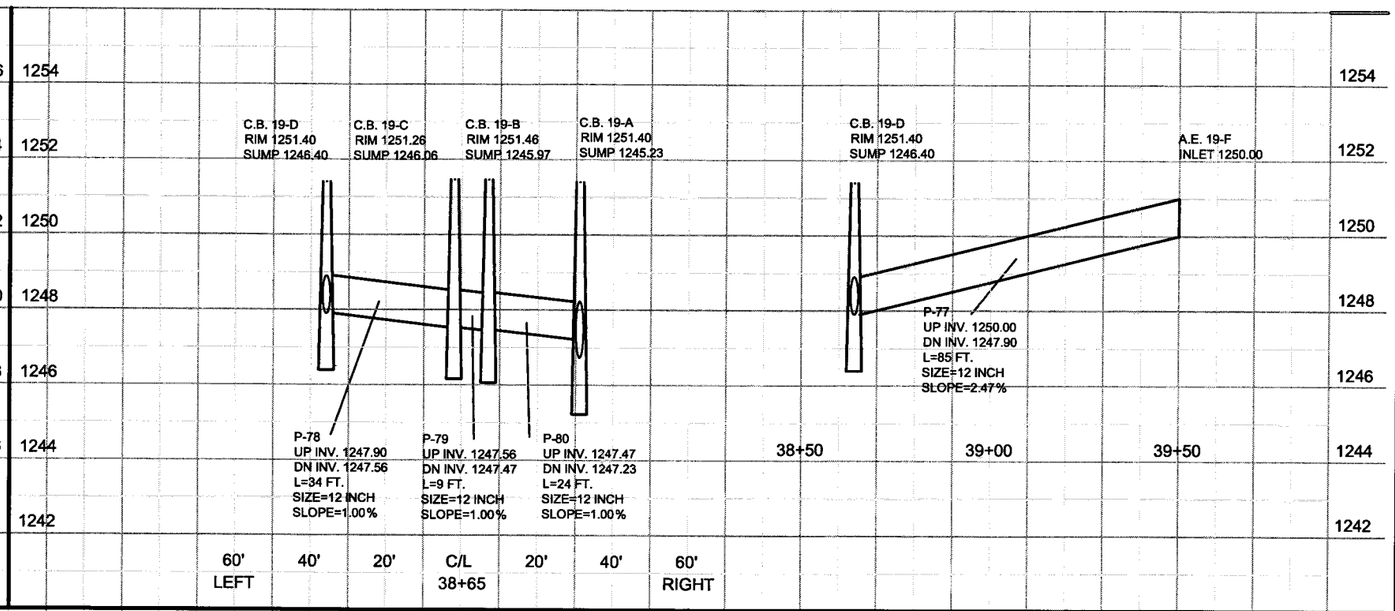

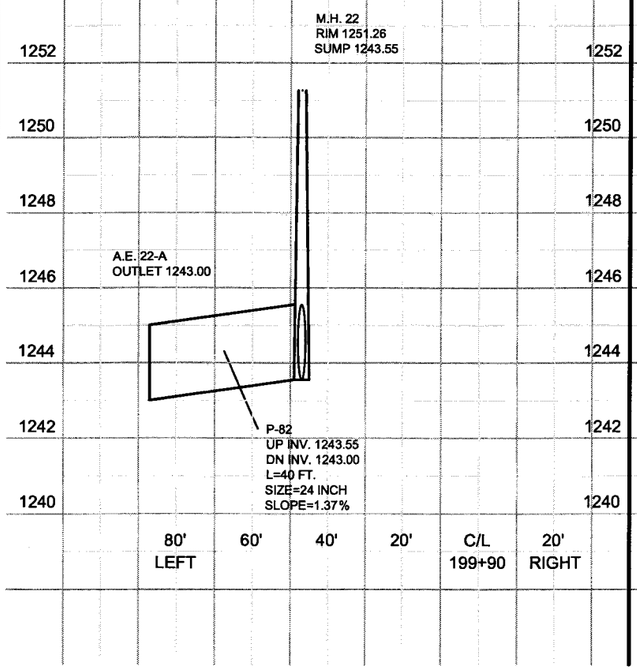

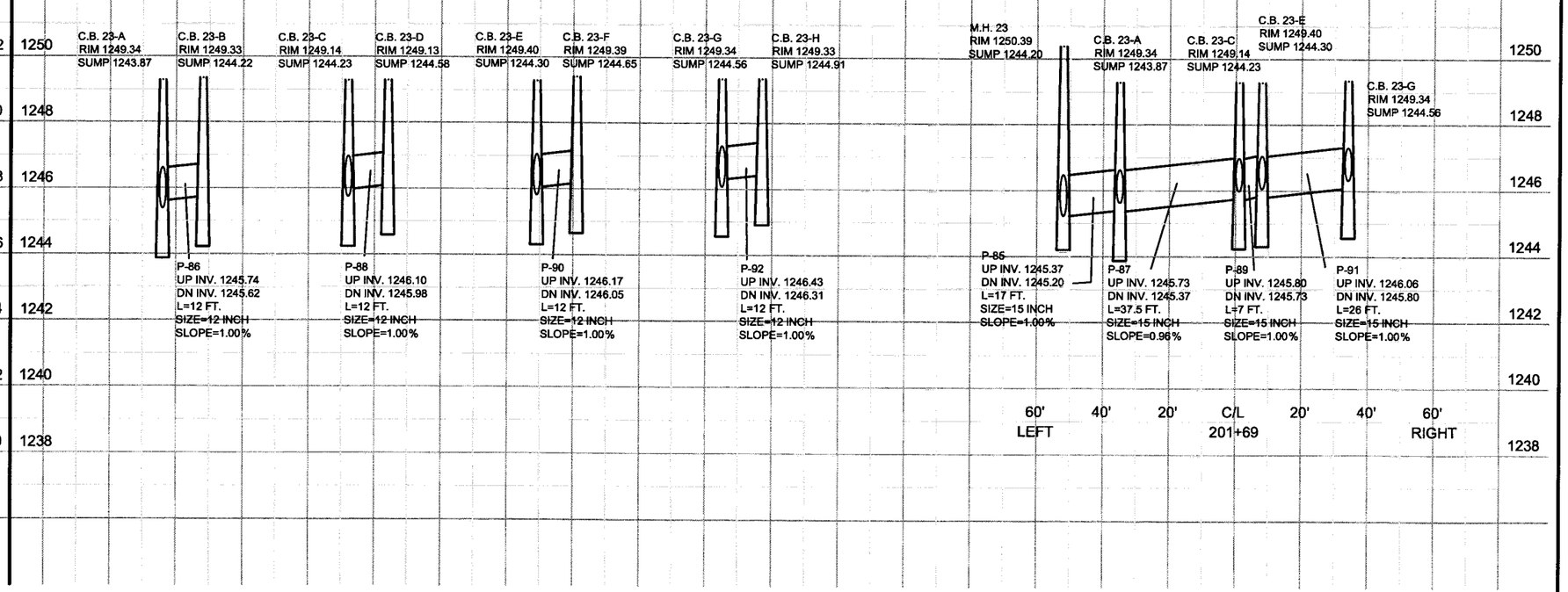

STATE PROJECT NUMBER: 6999-10-75	HWY: WESTON AVENUE	COUNTY: MARATHON	STORM SEWER & UTILITIES	SHEET NO: 4	E

P:\DRAFT\32290200 DOT WESTON AVE\UTIL 3A.dwg, Layout1, 04/01/2004 02:57:34 PM

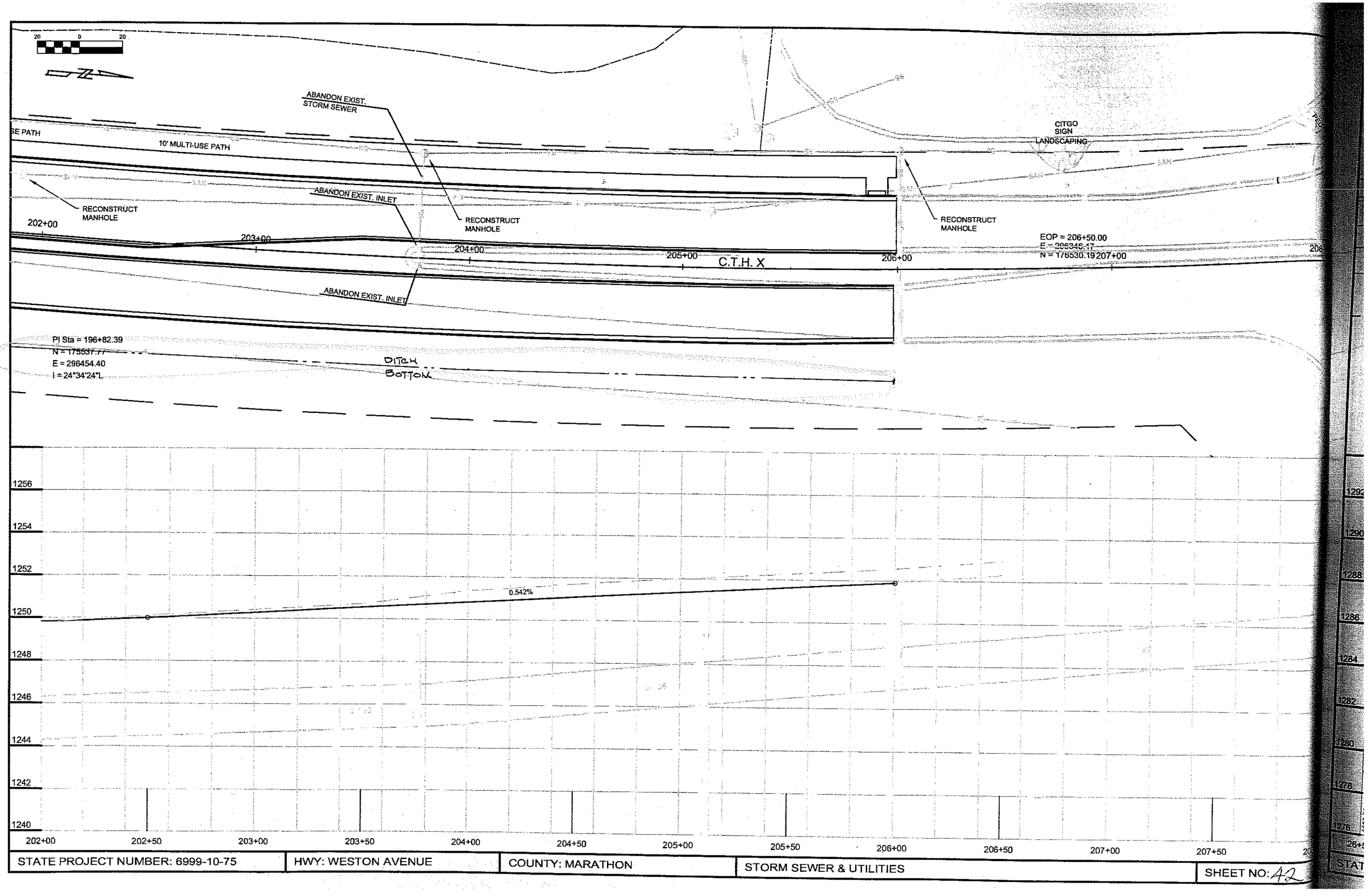

STATE PROJECT NUMBER: 6999-10-75	HWY: WESTON AVENUE	COUNTY: MARATHON	STORM SEWER & UTILITIES	SHEET NO: 42

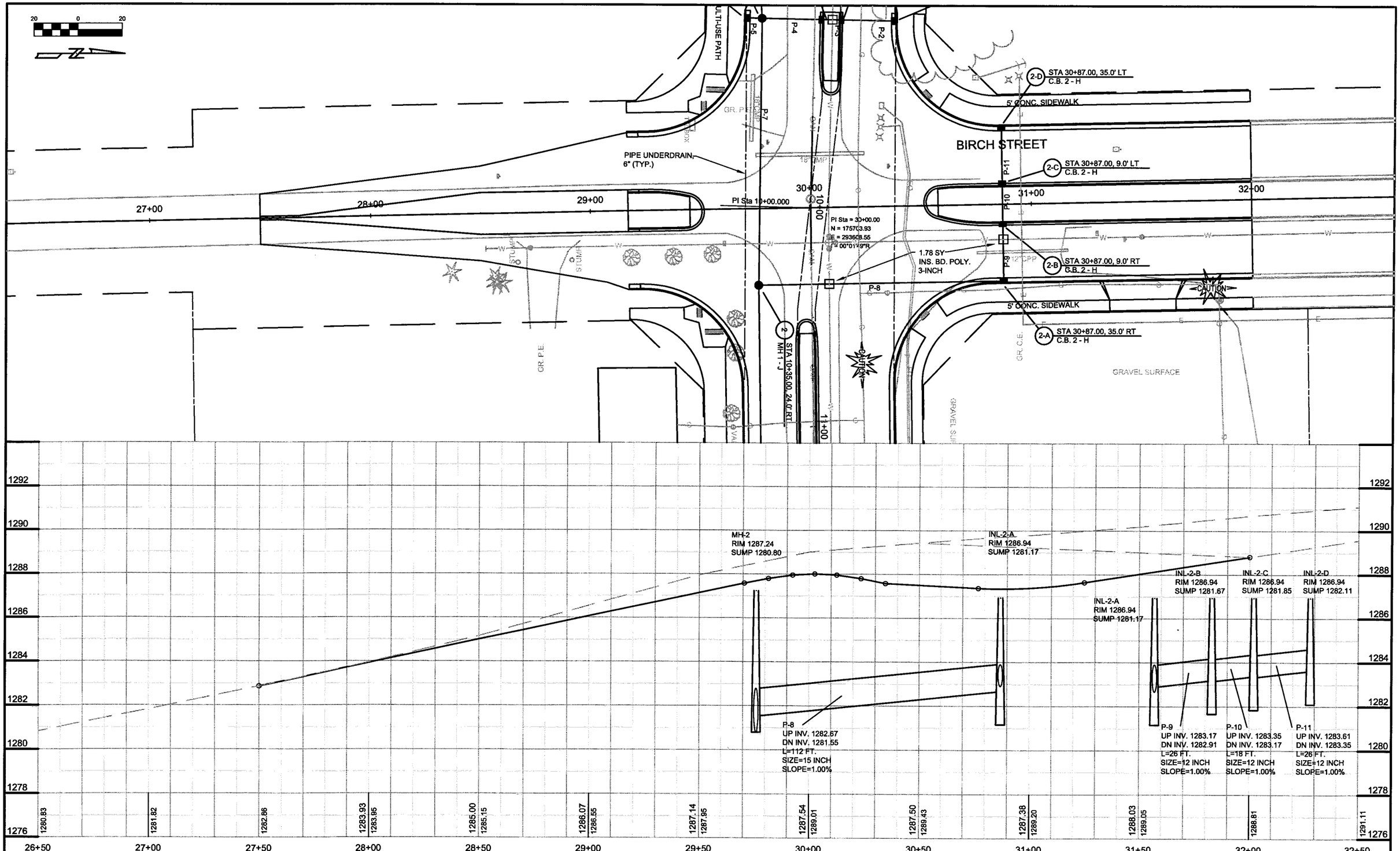

STATE PROJECT NUMBER: 6999-10-75	HWY: WESTON AVENUE	COUNTY: MARATHON	STORM SEWER & UTILITIES	SHEET NO: 43	E

P:\DRAFT\32290200 WDOT\RCp03008.dwg, Layout1, 04/01/2004 02:55:03 PM

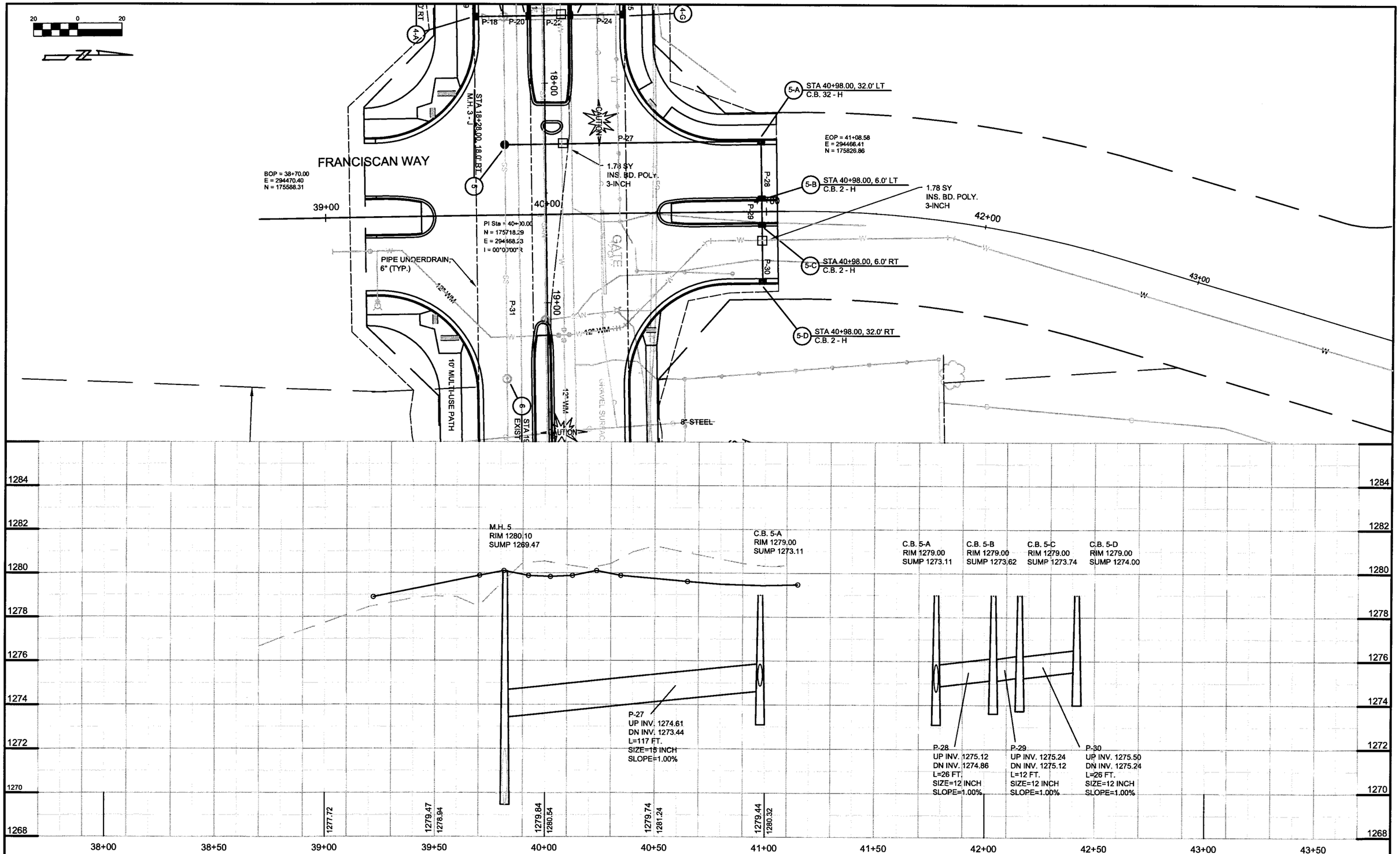

STATE PROJECT NUMBER: 6999-10-75	HWY: WESTON AVENUE	COUNTY: MARATHON	STORM SEWER & UTILITIES	SHEET NO: 44	E

P:\DRAFT\32290200 WDOT\RCp02009.dwg, Layout1, 04/01/2004 02:55:45 PM

20 0 20

P-40 P-41 P-42 P-43

STA 27+63.00, 36.0' LT
ABANDON MH

STA 27+33.00, 9.0' RT
ABANDON MH

STONE RIDGE DRIVE

Pr Sta = 50+00.00
N = 175733.69
E = 295389.47
I = 00°55'10"L

BOP Sta 48+60.000
BOP = 48+60.00
E = 295391.81
N = 175593.71

49+00 50+00 51+00

21+00 29+00

PIPE UNDERDRAIN, 6" (TYP.)

13-A STA 50+85.00, 35.0' LT
C.B. 2 - H

13 STA 50+85.00, 18.0' LT
MH 3 - I

13-B STA 50+85.00, 9.0' LT
C.B. 2 - H

13-C STA 50+85.00, 9.0' RT
C.B.2 - H

13-D STA 50+85.00, 35.0' RT
C.B.2 - H

EOP = 51+40.00
E = 295384.87
N = 175673.01

P-94 P-95 P-96 P-97 P-98

1.70 SY
INS. BD. POLY.
3-INCH

1.78 SY
INS. BD. POLY.
3-INCH

8" 16" 18" 18"

12" MIN

CAUTION

TREES

94+00

M.H. 12 (EXISTING)
TO BE REMOVED

M.H. 13
RIM 1270.99
SUMP 1265.30

P-94 (EXISTING)
UP INV. 1265.83
DN INV. 1265.30
L=49 FT.
SIZE=30 INCH
TO BE REMOVED

M.H. 13
RIM 1270.99
SUMP 1265.30

C.B. 13-C
RIM 1270.65
SUMP 1265.27

C.B. 13-A
RIM 1270.59
SUMP 1265.59

C.B. 13-B
RIM 1270.65
SUMP 1265.09

C.B. 13-D
RIM 1270.59
SUMP 1265.53

P-95
UP INV. 1267.09
DN INV. 1266.50
L=17 FT.
SIZE=12 INCH
SLOPE=3.47%

P-96
UP INV. 1266.59
DN INV. 1266.50
L=9 FT.
SIZE=12 INCH
SLOPE=1.00%

P-97
UP INV. 1266.77
DN INV. 1266.59
L=18 FT.
SIZE=12 INCH
SLOPE=1.00%

P-98
UP INV. 1267.03
DN INV. 1266.77
L=26 FT.
SIZE=12 INCH
SLOPE=1.00%

1274 1272 1270 1268 1266 1264 1262 1260 1258

48+00 48+50 49+00 49+50 50+00 50+50 51+00 51+50 52+00 52+50 53+00 53+50

STATE PROJECT NUMBER: 6999-10-75	HWY: WESTON AVENUE	COUNTY: MARATHON	STORM SEWER & UTILITIES	SHEET NO: 45	E

P:\DRAFT\32290200 WDOTRCp02010.dwg, Layout1, 04/01/2004 02:56:26 PM

P:\DRAFT\32290200 DOT WESTON AVE\SIGNING PLAN.dwg, Layout1, 4/1/2004 2:07:34 PM

1-01 W6-3 36" X 36"

1-02 W6-1 36" X 36"

1-03 SPEED LIMIT 35 R2-1 24" X 30"

1-04 W4-2R 36" x 36"

1-05 R4-7 24" X 30"

1-06 STOP R1-1 30" X 30" 4 WAY R1-3 12" X 6"

1-07 STOP R1-1 30" X 30" 4 WAY R1-3 12" X 6"

1-08 STOP R1-1 30" X 30" 4 WAY R1-3 12" X 6"

1-09 STOP R1-1 30" X 30" 4 WAY R1-3 12" X 6"

1-10 REMOVE SIGN AND SMALL SIGN SUPPORT

1-11 R4-7 24" X 30"

1-12

1-13

1-14 STOP R1-1 30" X 30" 4 WAY R1-3 12" X 6"

1-15 R4-7 24" X 30"

1-16 STOP R1-1 30" X 30" 4 WAY R1-3 12" X 6"

1-17 STOP R1-1 30" X 30" 4 WAY R1-3 12" X 6"

1-18 STOP R1-1 30" X 30" 4 WAY R1-3 12" X 6"

1-19 SPEED LIMIT 35 R2-1 24" X 30"

1-20 RIGHT LANE MUST TURN RIGHT R3-7R 30" X 30"

MOUNT ON LIGHT POLE @ STA. 13+59

1-21 RIGHT LANE MUST TURN RIGHT R3-7R 30" X 30"

1-22 NO PARKING ANY TIME R7-1D 18" X 24"

1-2B BIKE ROUTE D11-1 24" X 18" M7-1 9" X 12"

1-3B STOP R1-1 18" X 18"

1-4B BIKE ROUTE D11-1 24" X 18" M7-1 9" X 12"

REMOVE SIGN AND SMALL SIGN SUPPORT

REMOVE SIGN AND SMALL SIGN SUPPORT

REMOVE SIGN AND SMALL SIGN SUPPORT

REMOVE SIGN AND SMALL SIGN SUPPORT

REMOVE SIGN AND SMALL SIGN SUPPORT

5' CONC. SIDEWALK

5' CONC. SIDEWALK

5' CONC. SIDEWALK

ASPH

CONC 10' MULTI-USE PATH

10' MULTI-USE PATH

BIRCH STREET

WESTON AVENUE

PI Sta 10+00.000

7+00 8+00 9+00 10+00 11+00 12+00 13+00

31+00 30+00 29+00 28+00

LEGEND

STREET LIGHT

SIGNAL LIGHT

SIGNAL LIGHT

SIGNAL LIGHT

STATE PROJECT NUMBER: 6999-10-75	HWY: WESTON AVENUE	COUNTY: MARATHON	SIGNING PLAN: WESTON AVENUE	SHEET NO: 46	E

LEGEND

STREET LIGHT

SIGNAL LIGHT

SIGNAL LIGHT

SIGNAL LIGHT

42+00

41+00

FRANCISCAN WAY

STOP R1-1 30" X 30" — 2-4

STOP R1-1 30" X 30" — 2-3

2-1 NO PARKING ANY TIME R7-1D 18" X 24"

2-2 SPEED LIMIT 35 R2-1 24" X 30"

5' CONC. SIDEWALK

2-5 — R4-7 24" X 30" — 2-6

2-10 — R4-7 24" X 30"

5' CONC. SIDEWALK

16+00 17+00 18+00 19+00 20+00 21+00

40+00

WESTON AVENUE

2-7

10' MULTI-USE PATH

10' MULTI-USE PATH

LP

2-2B BIKE ROUTE D11-1 24" X 18" M7-1 9" X 12"

2-11 SPEED LIMIT 35 R2-1 24" X 30"

2-5B BIKE ROUTE D11-1 24" X 18" M7-1 9" X 12"

2-12 NO PARKING ANY TIME R7-1D 18" X 24"

2-9 STOP R1-1 30" X 30"

39+00

STOP R1-1 30" X 30" — 2-8

STATE PROJECT NUMBER: 6999-10-75	HWY: WESTON AVENUE	COUNTY: MARATHON	SIGNING PLAN: WESTON AVENUE	SHEET NO: 47	E

P:\DRAFT\32290200 DOT WESTON AVE\SIGNING PLAN.dwg, Layout2, 4/1/2004 2:09:19 PM

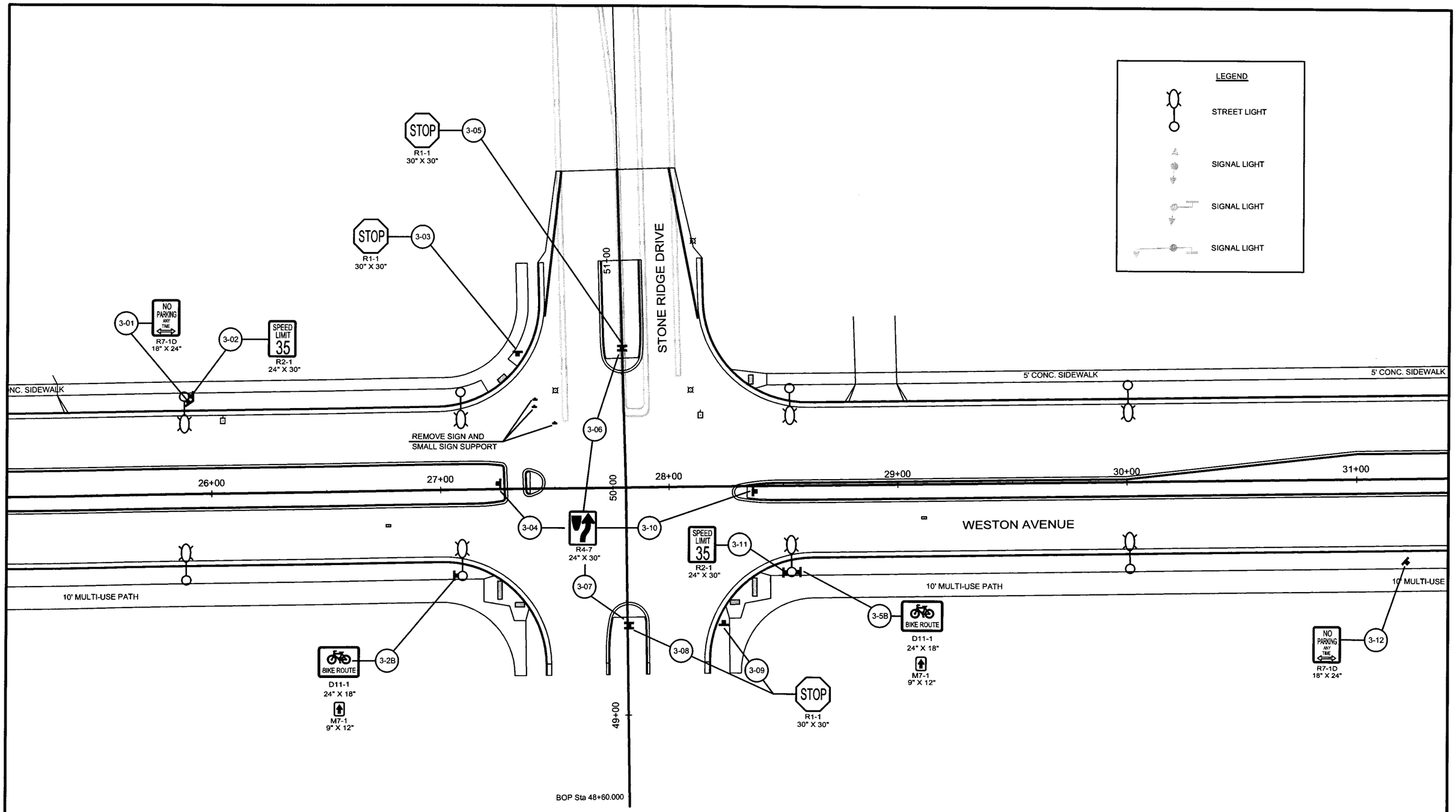

P:\DRAFT\32290200 DOT WESTON AVE\SIGNING PLAN.dwg, Layout3, 4/1/2004 2:09:30 PM

STATE PROJECT NUMBER: 6999-10-75	HWY: WESTON AVENUE	COUNTY: MARATHON	SIGNING PLAN: WESTON AVENUE	SHEET NO: 48	E

LEGEND

STREET LIGHT

SIGNAL LIGHT

SIGNAL LIGHT

SIGNAL LIGHT

4-02 — LEFT TURN LANE — R3-5L 24" X 30"

4-03 — NO PARKING ANY TIME — R7-1D 18" X 24"

4-04 — SPEED LIMIT 35 — R2-1 24" X 30"

REMOVE SIGN AND SMALL SIGN SUPPORT

REMOVE SIGN AND SMALL SIGN SUPPORT

REMOVE SIGN AND SMALL SIGN SUPPORT

5' CONC. SIDEWALK

5' CONC. SIDEWALK

5' CONC. SIDEWALK

CONC. PAVT

15'

CONC. PAVT

PI Sta 36+79.767

31+00 32+00 33+00 34+00 35+00 36+00 37+00

60+00

59+00

WESTON AVENUE

4-05 — 4-06 — R4-7 24" X 30"

4-07

4-08

4-09

4-01 — W3-3 36" X 36"

STOP — R1-1 30" X 30"

4-4B — BIKE ROUTE — D11-1 24" X 18" — M7-1 9" X 12"

4-3B — BIKE ROUTE — D11-1 24" X 18" — M7-1 9" X 12"

4-2B — BIKE ROUTE — D11-1 24" X 18" — M7-1 12" X 9" — M7-1 9" X 12"

10' MULTI-USE PATH

10' MULTI-USE PATH

10' MULTI-USE PATH

10' MULTI-USE PATH

BOP Sta 58+70.000

STATE PROJECT NUMBER: 6999-10-75	HWY: WESTON AVENUE	COUNTY: MARATHON	SIGNING PLAN: WESTON AVENUE

REV. 7/16/04

P:\DRAFT\32290200 DOT WESTON AVE\SIGNING PLAN.dwg, Layout8, 4/1/2004 2:11:11 PM

WESTON AVENUE

200+00
199+00
197+00
37+00
38+00
39+00
40+00
41+00
42+00

5-01 R4-7 24" X 30"
5-02 R4-7 24" X 30"
5-03 R4-7 24" X 30"
5-04 R4-7 24" X 30"
5-05 R4-7 24" X 30"
5-1X 5-2X R10-3B 9" X 12"
5-3X 5-4X R10-3B 9" X 12"
5-5X 5-6X R10-3B 9" X 12"
5-7X 5-8X R10-3B 9" X 12"
5-06 W4-2R 36" x 36"
5-07 W6-3 36" X 36"
5-08 W6-1 36" X 36"
5-09 W3-3 36" X 36"

START CROSSING
WATCH FOR VEHICLES
DON'T START
FINISH CROSSING IF STARTED
DON'T CROSS
TO CROSS PUSH BUTTON
TYPICAL

5' CONC. SIDEWALK
10' MULTI-USE PATH
CONC. PAVT
CONC
ASPH
REMOVE SIGN AND SMALL SIGN SUPPORT
Pl Sta 36+76.767
15'
5:1
18:1
14:1

* –MOUNTED ON SIGNAL POLES

LEGEND
STREET LIGHT
SIGNAL LIGHT
SIGNAL LIGHT
SIGNAL LIGHT

STATE PROJECT NUMBER: 6999-10-75	HWY: WESTON AVENUE	COUNTY: MARATHON	SIGNING PLAN: WESTON AVENUE	SHEET NO: 50	E

P:\DRAFT\32290200-DOT WESTON AVE\SIGNING PLAN.dwg, Layout4, 4/1/2004 2:10:00 PM

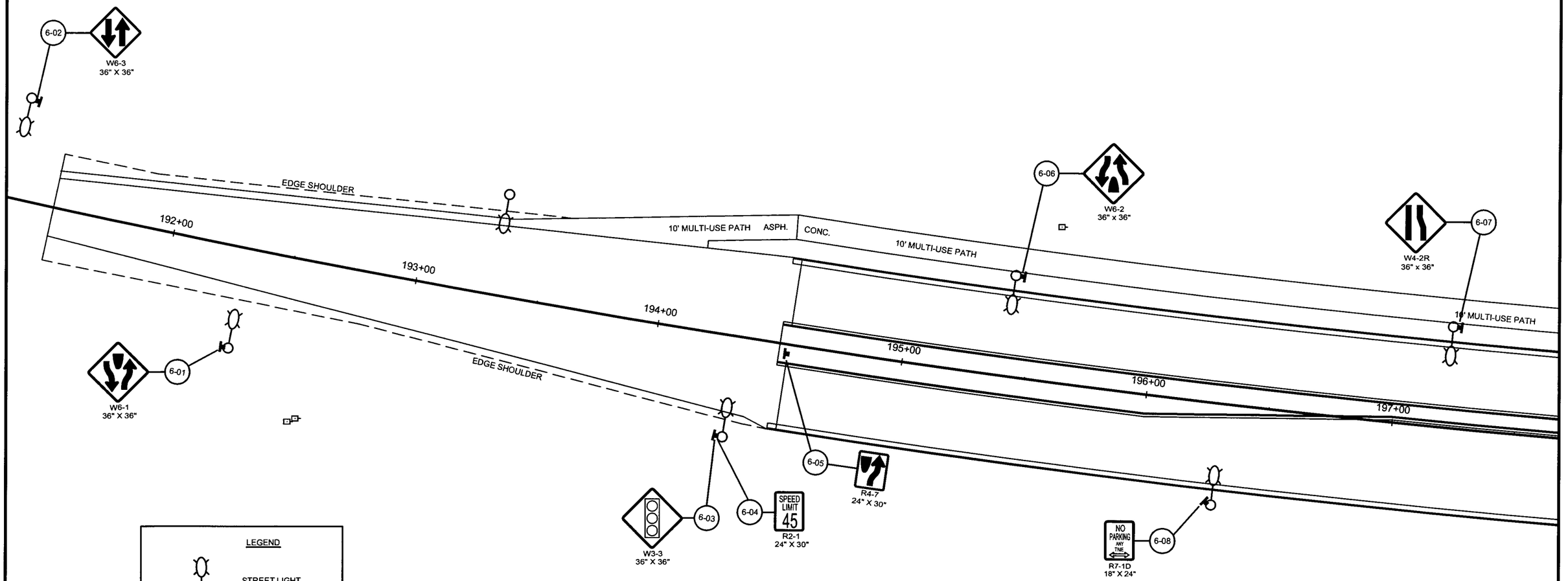

STATE PROJECT NUMBER: 6999-10-75	HWY: WESTON AVENUE	COUNTY: MARATHON	SIGNING PLAN: C.T.H. X	SHEET NO: 51 E

P:\DRAFT\32290200 DOT WESTON AVE\SIGNING PLAN.dwg, Layout5, 4/1/2004 2:10:27 PM

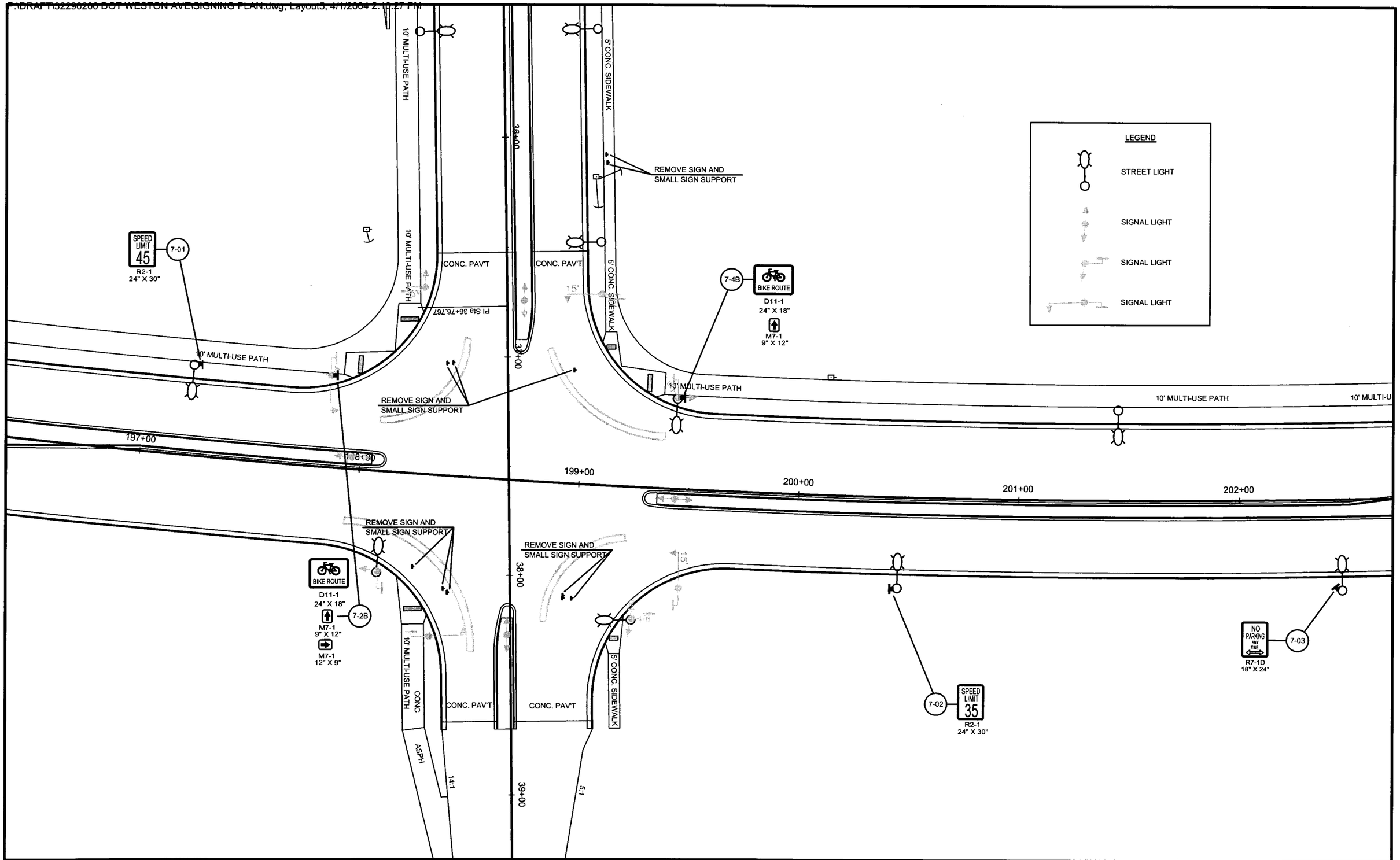

STATE PROJECT NUMBER: 6999-10-75	HWY: WESTON AVENUE	COUNTY: MARATHON	SIGNING PLAN: C.T.H. X	SHEET NO: 52	E

P:\DRAFT\32290200 DOT WESTON AVE\SIGNING PLAN.dwg, Layout8, 4/1/2004 2:10:36 PM

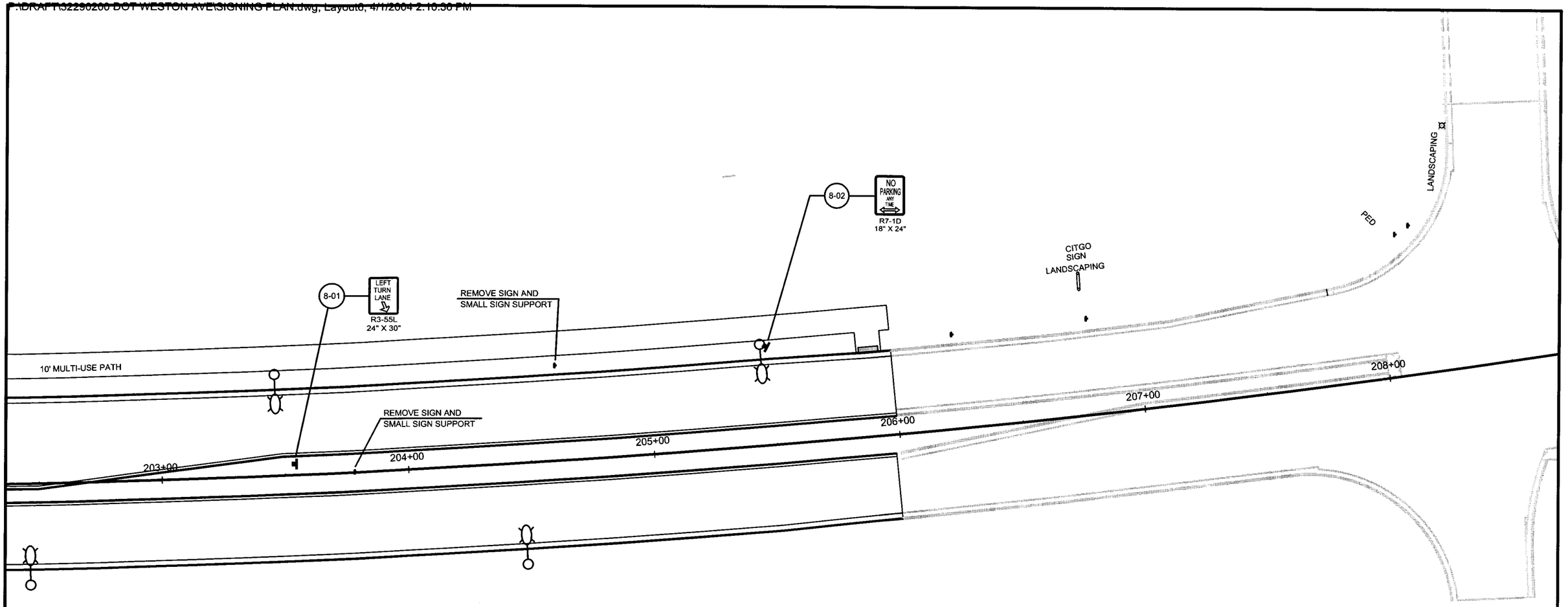

LEGEND

STREET LIGHT

SIGNAL LIGHT

SIGNAL LIGHT

SIGNAL LIGHT

STATE PROJECT NUMBER: 6999-10-75	HWY: WESTON AVENUE	COUNTY: MARATHON	SIGNING PLAN: C.T.H. X	SHEET NO: 53 E

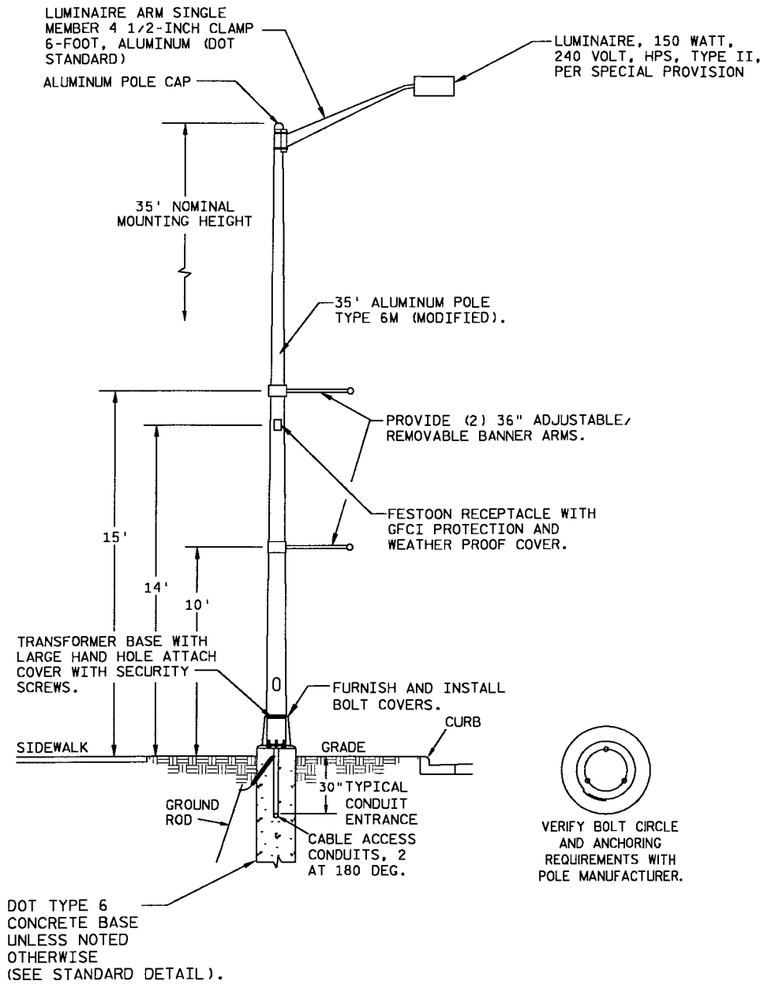

TYPE 6M LIGHT POLE & LUMINAIRE DETAIL

NTS

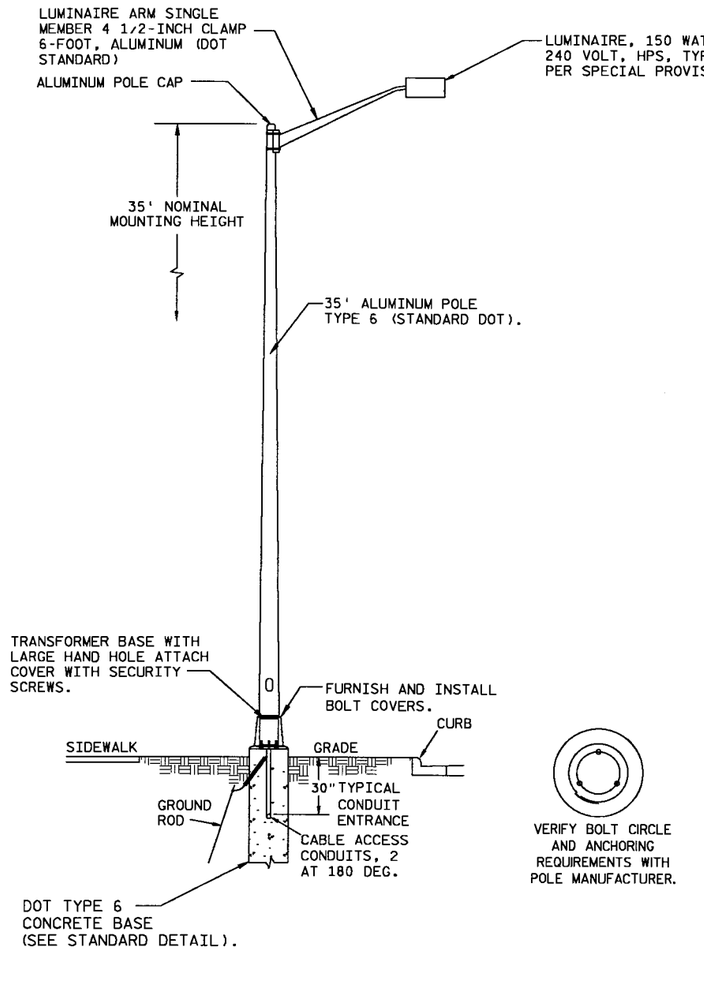

TYPE 6 LIGHT POLE & LUMINAIRE DETAIL

NTS

SYMBOLS	
PB-*	PULL BOX STEEL 24X36-INCHES
PB-*	PULL BOX STEEL 24X48-INCHES
	CONDUIT: CONDUIT SIZE = 2 INCH SCHEDULE 40 PVC UNLESS LISTED OTHERWISE.
3 / 8	CONDUCTOR SYMBOL: TOP NUMBER = No. OF CONDUCTORS BOTTOM NUMBER = CONDUCTOR SIZE FOR COPPER CONDUCTORS IN AWG
	POLE WITH ONE MAST ARM AND ONE FIXTURE. REFER TO FIXTURE LEGEND FOR ADDITIONAL INFORMATION.
M	SERVICE CONTROLLER WITH METER PEDESTAL.

FIXTURE LEGEND

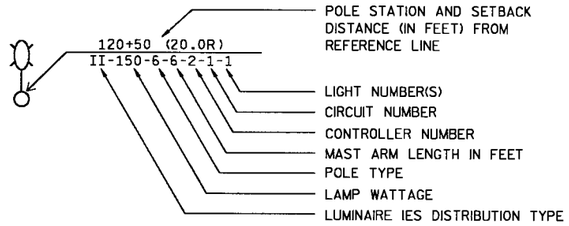

ORIGINAL PLANS PREPARED BY
LANG
Associates, Inc.
Consulting Engineers
510 N. 17th Ave. – Wausau, Wisconsin 54401
PHONE: 715-845-1333, FAX: 715-848-9156

(Date) (Signature)

STATE PROJECT NUMBER: 6999-10-75	HWY: WESTON AVENUE	COUNTY: MARATHON	LIGHTING DETAILS	SCALE, NONE	SHEET NO: 54	E

FILE NAME :

LEVELS ON - 1,2,3,4,5,6,7,8,9,10,11,12,13,14,15,16,17,18,19,20,21,22,23,24,25,26,27,28,29,30,31,32,33,34,35,36,37,38,39,40,41,42,43,44,45,46,47,48,49,50,51,52,53,54,55,56,57,58,59,60,63

CONTROLLER #1 ONE LINE DIAGRAM NOTES

1. ELECTRICAL CONTRACTOR SHALL ARRANGE FOR A 200A, 1 PHASE, 120/240V, UNDERGROUND SERVICE FROM THE UTILITY (WPS CO.). ANY UTILITY COSTS ASSOCIATED WITH THE UNDERGROUND SERVICE ARE THE RESPONSIBILITY OF THE ELECTRICAL CONTRACTOR.
2. PROVIDE A METERING PEDESTAL PER UTILITY REQUIREMENTS. SEE SERVICE AND LIGHTING CONTROL CABINET DETAIL.
3. GROUND SERVICE PER CODE TO TWO DRIVEN GROUND RODS. SEE SERVICE AND LIGHTING CONTROL CABINET DETAIL.
4. PROVIDE A GFCI RECEPTACLE IN A WEATHER PROOF ENCLOSURE IN THE CONTROL CABINET.
5. PROVIDE 200A, 1 PHASE, 120/240V, 3 WIRE PANELBOARD WITH A MINIMUM OF 30 CIRCUIT POSITIONS IN A NEMA-1 ENCLOSURE. THE PANELBOARD SHALL HAVE A COPPER BUS, A 2-POLE, 200A MAIN BREAKER AND BOLT-IN BRANCH BREAKERS SHOWN IN THE LIGHTING CONTROLLER DIAGRAM. THE PANELBOARD SHALL INCLUDE A GROUND AND A NEUTRAL TERMINAL STRIP AND BE U.L. SERVICE ENTRANCE RATED.
6. PROVIDE A PHOTO CONTROL IN THE CONTROLLER CABINET. THE PHOTO CONTROL SHALL BE RATED 120V, 1500 WATTS, AND SHALL BE THE THERMAL TYPE WITH TIME DELAY. THE PHOTO CONTROL SHALL TURN THE LIGHTS ON AT BETWEEN 1 TO 5 FOOT CANDLES OF DAYLIGHT AND TURN THEM OFF AT APPROXIMATELY 15 FOOT CANDLES OF DAYLIGHT.
7. PROVIDE A PROGRAMMABLE TIME CLOCK WITH A CONTACT FOR CONTROL OF THE FESTOON RECEPTACLE CIRCUIT CONTACTOR. SET TIME CLOCK TO TURN ON FESTOON RECEPTACLES VIA PHOTO CONTROL AND TURN OFF AT MIDNIGHT.
8. PROVIDE 3 POSITION SWITCH MARKED "ON, OFF, AUTO" TO BYPASS THE PHOTO CONTROL OR TIME CLOCK AS SHOWN. LABEL SWITCH "PHOTO CONTROL BYPASS" OR "TIME CLOCK BYPASS" PER DIAGRAM.
9. PROVIDE 4-POLE 60A RELAY IN NEMA 1 ENCLOSURE AS SHOWN FOR CONTROL OF THE LIGHTING AND/OR FESTOON RECEPTACLES IN LIGHTING CONTROLLER. THE RELAY CONTACTS SHALL BE RATED 240 VOLTS AND SHALL BE THE HEAVY DUTY TYPE RATED FOR BALLAST TYPE LOADS. THE RELAY COILS SHALL BE OPERATED AT 120 VOLTS.
10. PROVIDE SURGE SUPPRESSER RATED FOR LINE TO LINE, LINE TO NEUTRAL AND NEUTRAL TO GROUND SUPPRESSION MODES AND HAVING A MANUFACTURERS RATED WITHSTAND CAPABILITY OF 60K AMPS OR GREATER. SURGE SUPPRESSOR MAY BE EQUAL TO A LEVITON MODEL 32120-001.
11. PROVIDE RESERVED SPACE FOR FUTURE 4-POLE, 60A. RELAY.

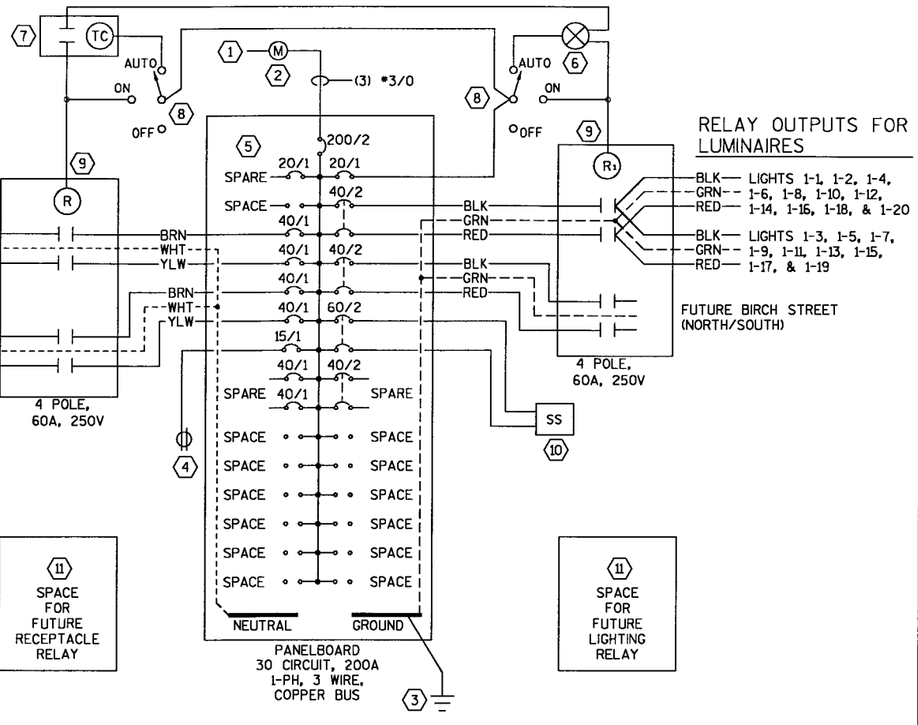

LIGHTING CONTROLLER #1 ONE LINE ELECTRICAL DIAGRAM

NTS

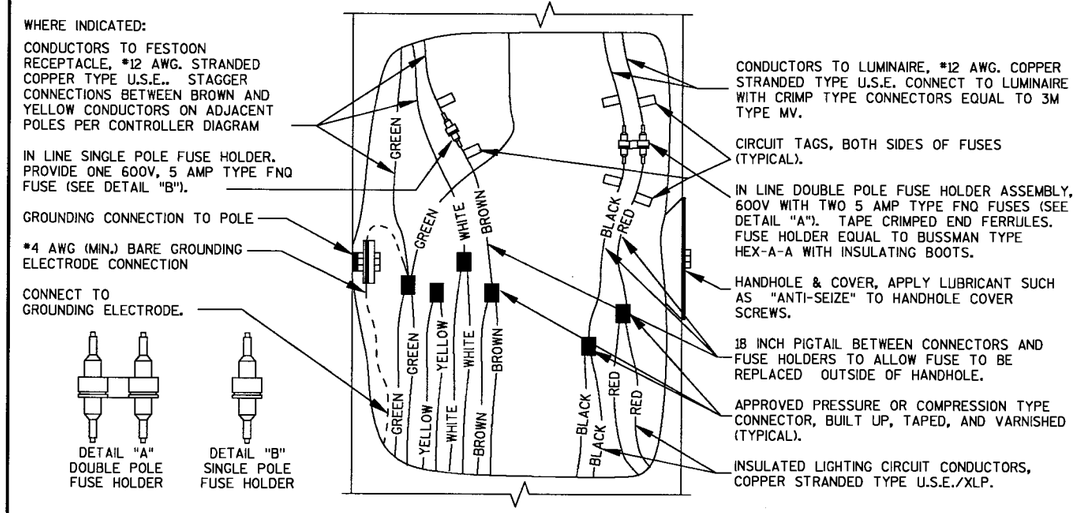

240 VOLT, 2 WIRE PLUS GROUND - LIGHT CONNECTION WITH 120 VOLT, 3 WIRE FESTOON RECEPTACLE CONNECTION DETAIL

NTS

POLE TYPE 6M

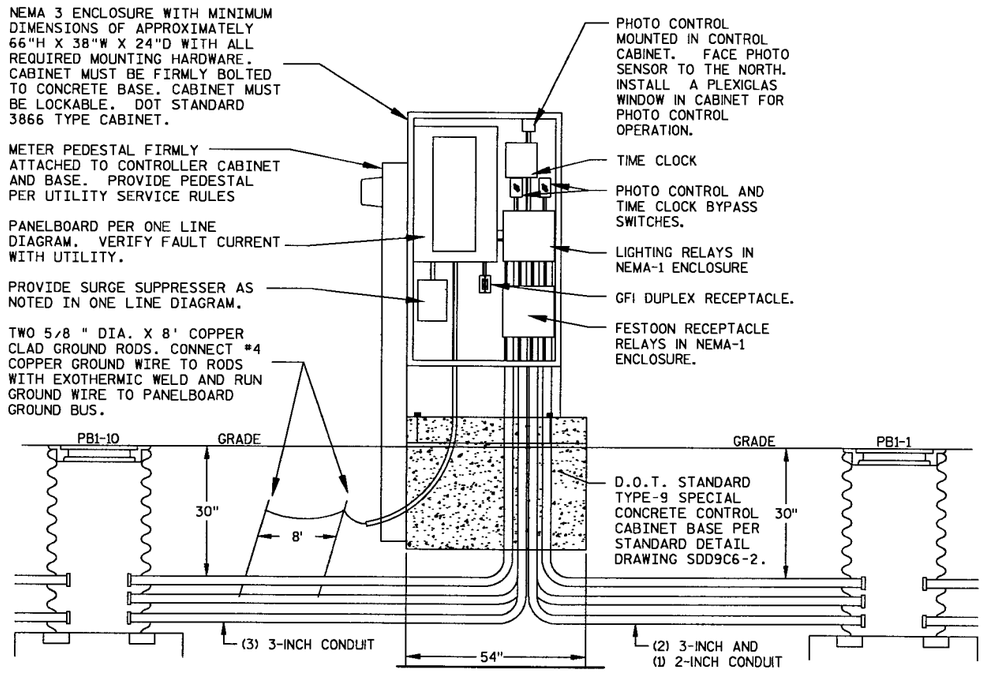

SERVICE AND LIGHTING CONTROL CABINET #1

(FRONT VIEW)

STATE PROJECT NUMBER: 6999-10-75	HWY: WESTON AVENUE	COUNTY: MARATHON	LIGHTING DETAILS	SCALE, NONE	SHEET NO: 55	E

FILE NAME :

WISDOT/CADDS SHEET 42

LEVELS ON - 1,2,3,4,5,6,7,8,9,10,11,12,13,14,15,16,17,18,19,20,21,22,23,24,25,26,27,28,29,30,31,32,33,34,35,36,37,38,39,40,41,42,43,44,45,46,47,48,49,50,51,52,53,54,55,56,57,58,59,60, 63

CONTROLLER #2 ONE LINE DIAGRAM NOTES

1. ELECTRICAL CONTRACTOR SHALL ARRANGE FOR A 200A, 1 PHASE, 120/240V, UNDERGROUND SERVICE FROM THE UTILITY (WPS CO.). ANY UTILITY COSTS ASSOCIATED WITH THE UNDERGROUND SERVICE ARE THE RESPONSIBILITY OF THE ELECTRICAL CONTRACTOR.
2. PROVIDE A METERING PEDESTAL PER UTILITY REQUIREMENTS. SEE SERVICE AND LIGHTING CONTROL CABINET DETAIL.
3. GROUND SERVICE PER CODE TO TWO DRIVEN GROUND RODS. SEE SERVICE AND LIGHTING CONTROL CABINET DETAIL.
4. PROVIDE A GFCI RECEPTACLE IN A WEATHER PROOF ENCLOSURE IN THE CONTROL CABINET.
5. PROVIDE 200A, 1 PHASE, 120/240V, 3 WIRE PANELBOARD WITH A MINIMUM OF 30 CIRCUIT POSITIONS IN A NEMA-1 ENCLOSURE. THE PANELBOARD SHALL HAVE A COPPER BUS, A 2-POLE, 200A MAIN BREAKER AND BOLT-IN BRANCH BREAKERS SHOWN IN THE LIGHTING CONTROLLER DIAGRAM. THE PANELBOARD SHALL INCLUDE A GROUND AND A NEUTRAL TERMINAL STRIP AND BE U.L. SERVICE ENTRANCE RATED.
6. PROVIDE A PHOTO CONTROL IN THE CONTROLLER CABINET. THE PHOTO CONTROL SHALL BE RATED 120V, 1500 WATTS, AND SHALL BE THE THERMAL TYPE WITH TIME DELAY. THE PHOTO CONTROL SHALL TURN THE LIGHTS ON AT BETWEEN 1 TO 5 FOOT CANDLES OF DAYLIGHT AND TURN THEM OFF AT APPROXIMATELY 15 FOOT CANDLES OF DAYLIGHT.
7. PROVIDE A PROGRAMMABLE TIME CLOCK WITH A CONTACT FOR CONTROL OF THE FESTOON RECEPTACLE CIRCUIT CONTACTOR. SET TIME CLOCK TO TURN ON FESTOON RECEPTACLES VIA PHOTO CONTROL AND TURN OFF AT MIDNIGHT.
8. PROVIDE 3 POSITION SWITCH MARKED "ON, OFF, AUTO" TO BYPASS THE PHOTO CONTROL OR TIME CLOCK AS SHOWN. LABEL SWITCH "PHOTO CONTROL BYPASS" OR "TIME CLOCK BYPASS" PER DIAGRAM.
9. PROVIDE 4-POLE 60A RELAY IN NEMA 1 ENCLOSURE AS SHOWN FOR CONTROL OF THE LIGHTING AND/OR FESTOON RECEPTACLES IN LIGHTING CONTROLLER. THE RELAY CONTACTS SHALL BE RATED 240 VOLTS AND SHALL BE THE HEAVY DUTY TYPE RATED FOR BALLAST TYPE LOADS. THE RELAY COILS SHALL BE OPERATED AT 120 VOLTS.
10. PROVIDE SURGE SUPPRESSER RATED FOR LINE TO LINE, LINE TO NEUTRAL AND NEUTRAL TO GROUND SUPPRESSION MODES AND HAVING A MANUFACTURERS RATED WITHSTAND CAPABILITY OF 60K AMPS OR GREATER. SURGE SUPPRESSOR MAY BE EQUAL TO A LEVITON MODEL 32120-001.
11. PROVIDE RESERVED SPACE FOR FUTURE 4-POLE, 60A RELAY.

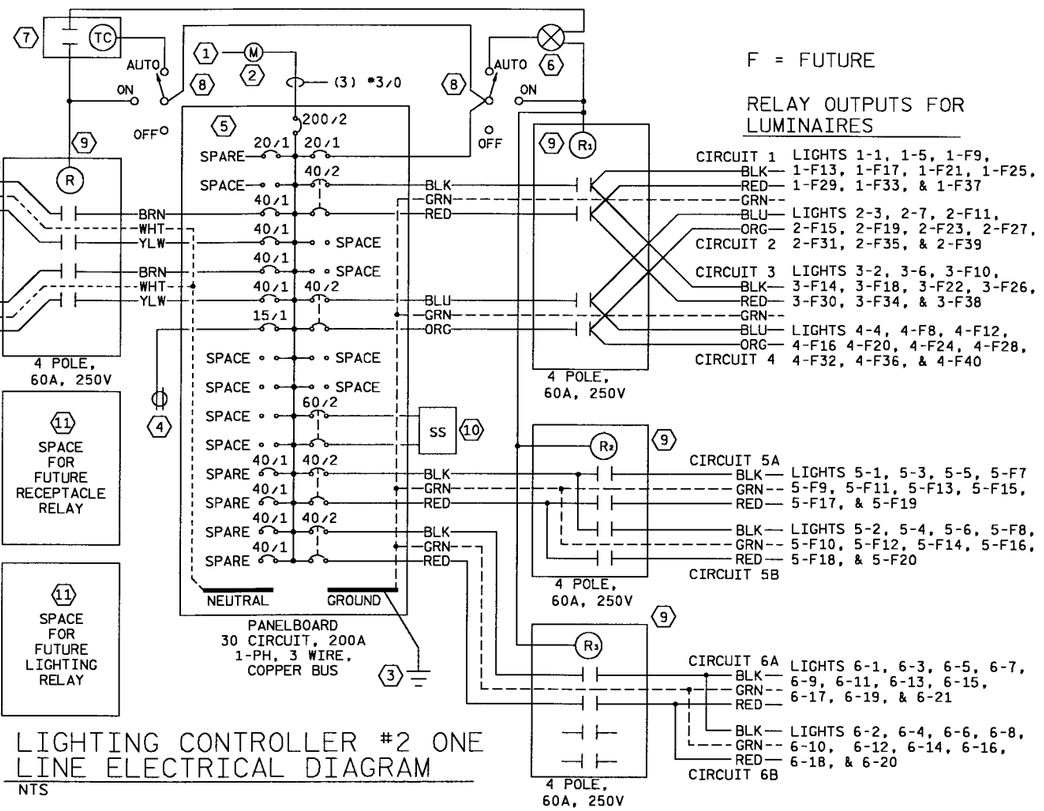

LIGHTING CONTROLLER #2 ONE LINE ELECTRICAL DIAGRAM

NTS

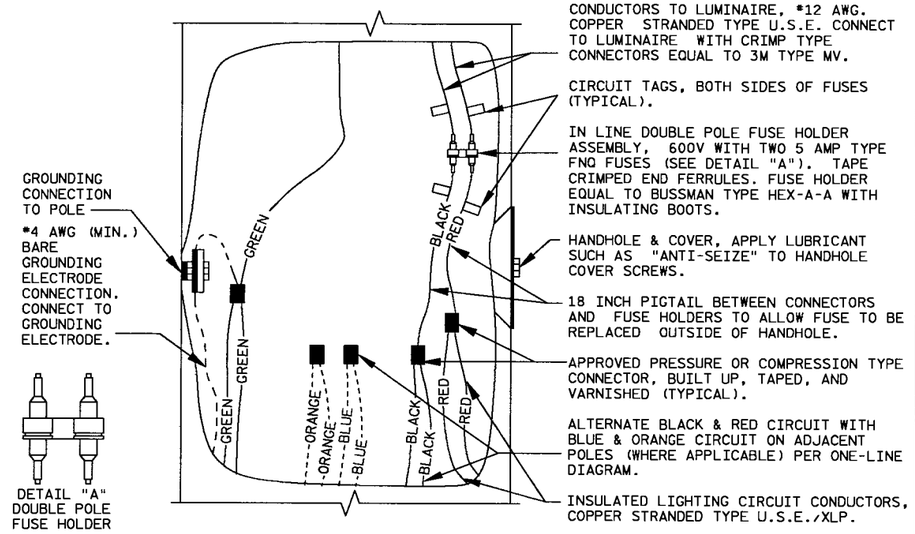

240 VOLT, 2 WIRE PLUS GROUND - LIGHT CONNECTION DETAIL

NTS

POLE TYPE 6

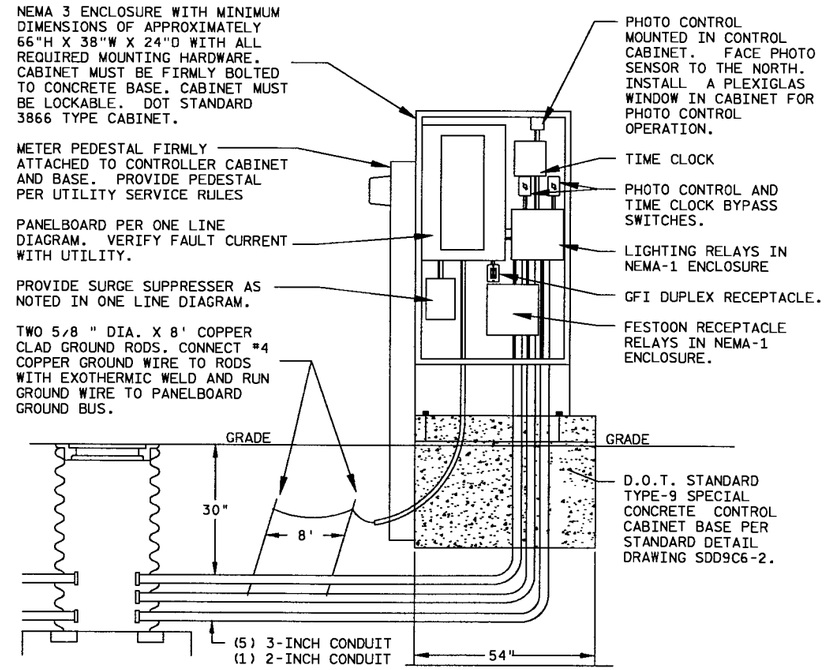

SERVICE AND LIGHTING CONTROL CABINET #2

(FRONT VIEW)

STATE PROJECT NUMBER: 6999-10-75	HWY: WESTON AVENUE	COUNTY: MARATHON	LIGHTING DETAILS	SCALE, NONE	SHEET NO: 56	E

FILE NAME :

WISDOT/CADDS SHEET 42

LEVELS ON = 1,2,3,4,5,6,7,8,9,10,11,12,13,14,15,16,17,18,19,20,21,22,23,24,25,26,27,28,29,30,31,32,33,34,35,36,37,38,39,40,41,42,43,44,45,46,47,48,49,50,51,52,53,54,55,56,57,58,59,60,63

DRAWING NOTES

(1) THIS CONDUIT SHALL BE RESERVED FOR LOCAL ELECTRICAL UTILITY SERVICE.

STATE PROJECT NUMBER: 6999-10-75	HWY: WESTON AVENUE	COUNTY: MARATHON	LIGHTING PLAN	SCALE, FEET 0 20 40	SHEET NO: 57	E

FILE NAME :

IPELINE
ATION

6-12" STEEL

5' CONC. SIDEWALK

2-2"

20+85 (43.0LT)
II-150-6M-6-1-1-17

22+09 (43.0LT)
II-150-6M-6-1-1-19

23+47 (43.0LT)
II-150-6M-6-2-6-21

24+68 (43.0LT)
II-150-6M-6-2-6-19

25+88 (43.0LT)
II-150-6M-6-2-6-17

CAUTION

20+00 21+00 WESTON AVENUE 22+00 23+00 24+00 25+00 WESTON AVENUE 26+00

20+85 (38.0RT)
II-150-6M-6-1-1-18

22+09 (38.0RT)
II-150-6M-6-1-1-20

23+47 (38.0RT)
II-150-6M-6-2-6-20

24+68 (38.0RT)
II-150-6M-6-2-6-18

25+88 (38.0RT)
II-150-6M-6-2-6-16

10' MULTI-USE PATH

10' MULTI-USE PATH

12" STEEL

PB2-10 PB2-11 PB2-12 PB2-13 PB2-9 PB2-15 PB2-16 PB2-17 PB2-18 PB2-19

(2) 2"

27+09 (43.0LT)
II-150-6M-6-2-6-15

28+53 (43.0LT)
II-150-6M-6-2-6-13

30+00 (43.0LT)
II-150-6M-6-2-6-11

31+50 (43.0LT)
II-150-6M-6-2-6-9

5' CONC. SIDEWALK

26+00 27+00 28+00 29+00 30+00 31+00 32+00

50-00 STONE RIDGE DRIVE

27+09 (38.0RT)
II-150-6M-6-2-6-14

28+53 (38.0RT)
II-150-6M-6-2-6-12

30+00 (38.0RT)
II-150-6M-6-2-6-10

31+50 (38.0RT)
II-150-6M-6-2-6-8

WESTON AVENUE

10' MULTI-USE PATH

10' MULTI-USE PATH

2

N

STATE PROJECT NUMBER: 6999-10-75	HWY: WESTON AVENUE	COUNTY: MARATHON	LIGHTING PLAN	SCALE FEET 0 20 40	SHEET NO: 52

REV. 7\16/04

FILE NAME :

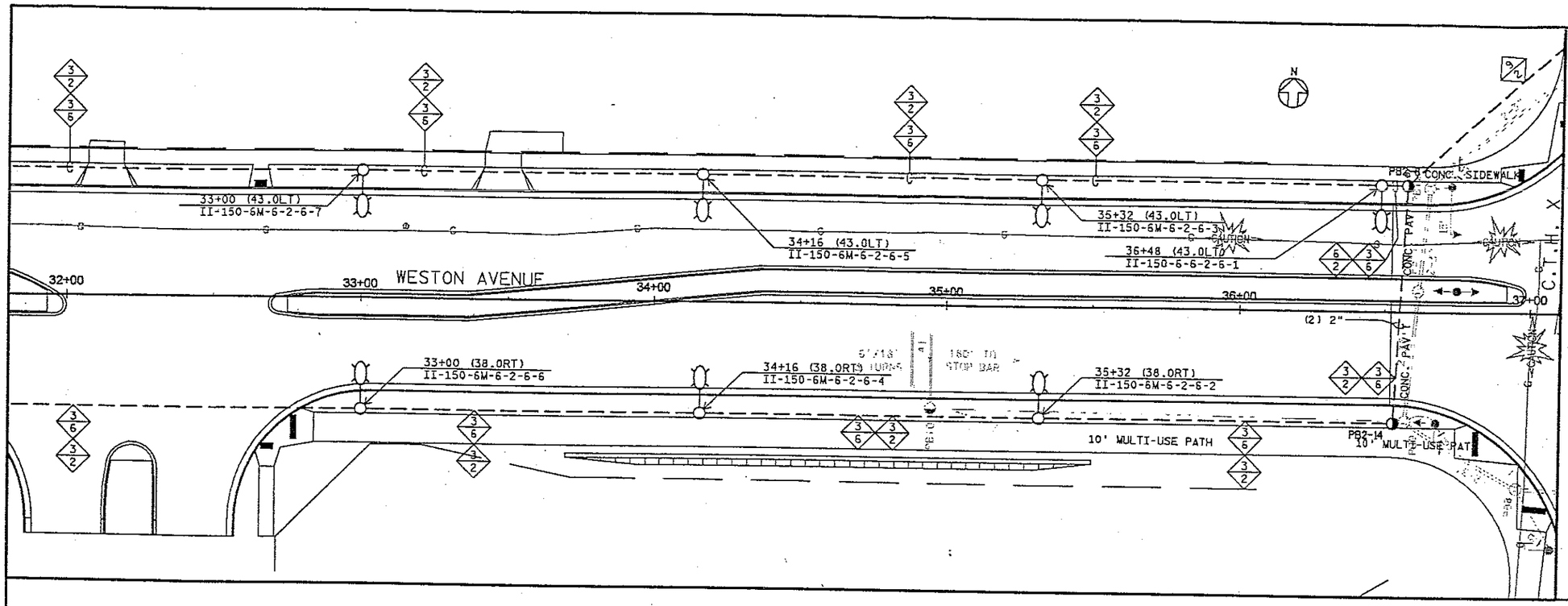

STATE PROJECT NUMBER: 6999-10-75	HWY: WESTON AVENUE	COUNTY: MARATHON	LIGHTING PLAN	SCALE: FEET 0 20 40	SHEET NO: 59

REV. 7\16/04

DRAWING NOTES

1. THIS CONDUIT SHALL BE USED FOR LOCAL ELECTRICAL UTILITY SERVICE.
2. PROVIDE ALUMINUM LUMINAIRE ARM PER STANDARD SPECIFICATIONS AND LUMINAIRE PER SPECIAL PROVISIONS. COORDINATE INSTALLATION ONTO SIGNAL POLE. PROVIDE 120V FEED TO LIGHTING FROM SIGNAL CABINET VIA SIGNAL SYSTEM CONDUITS (REFER TO SIGNAL PLANS). LIGHTING SHALL BE FED WITH 3-12 AWG TRAFFIC SIGNAL CABLE. PROVIDE A 20/1 BREAKER COMPATIBLE WITH EXISTING SIGNAL CONTROLLER PANELBOARD TO SERVE LIGHTING. COORDINATE INSTALLATION WITH TRAFFIC SIGNAL CONTRACTOR.
3. FUTURE LIGHTING MAY BE ADDED TO EXISTING CIRCUITING WITH THE FOLLOWING RESTRICTIONS: ELEVEN (11) 150W HPS FIXTURES AT A MAXIMUM LENGTH OF 400' BETWEEN FIXTURES SHALL BE THE TOTAL LOAD ALLOWED FOR EACH 240V CIRCUIT SHOWN (SPECIAL NOTE: 400' SPACING ALLOWS FOR ALTERNATING OF CIRCUITS FROM ONE POLE TO THE NEXT).

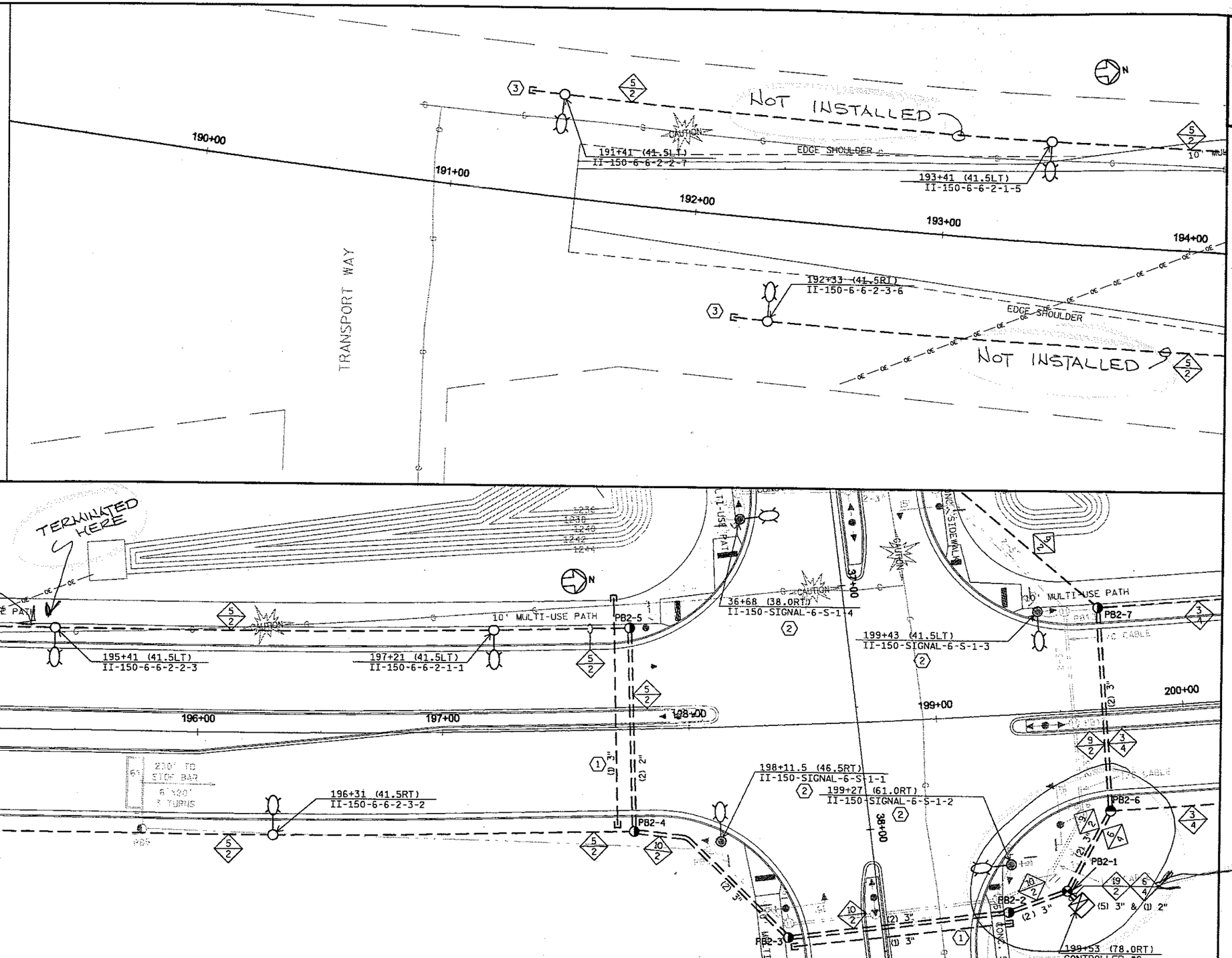

STATE PROJECT NUMBER: 6999-10-75	HWY: WESTON AVENUE	COUNTY: MARATHON	LIGHTING PLAN	SCALE, FEET 0 20 40	SHEET NO: 60 E

FILE NAME :

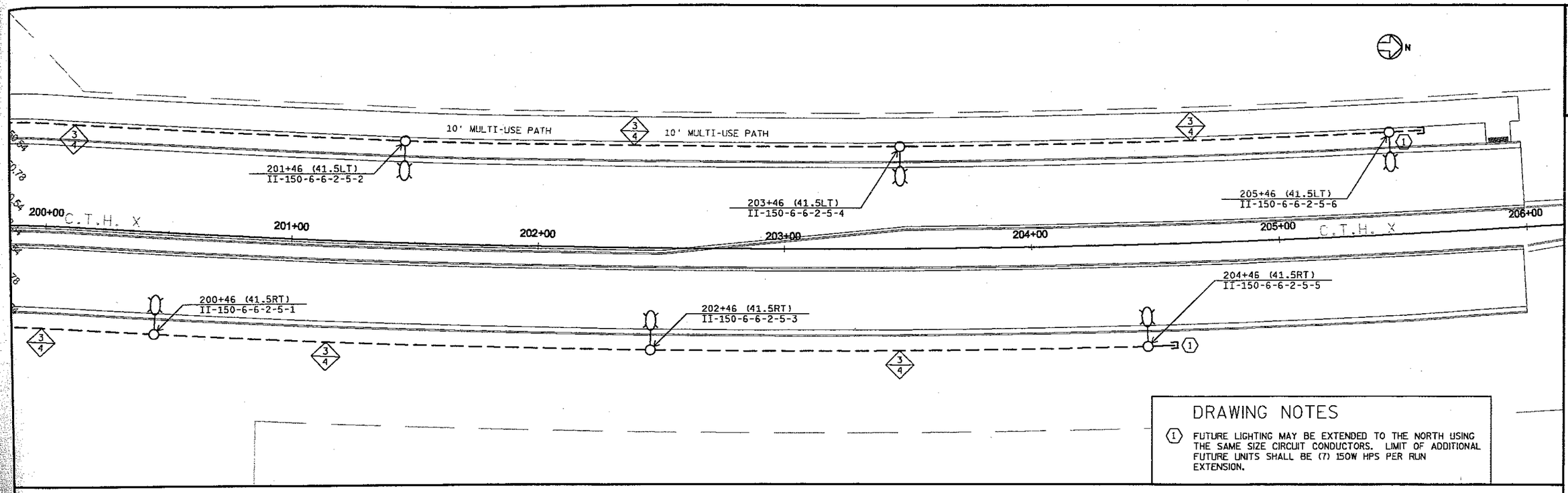

DRAWING NOTES

(1) FUTURE LIGHTING MAY BE EXTENDED TO THE NORTH USING THE SAME SIZE CIRCUIT CONDUCTORS. LIMIT OF ADDITIONAL FUTURE UNITS SHALL BE (7) 150W HPS PER RUN EXTENSION.

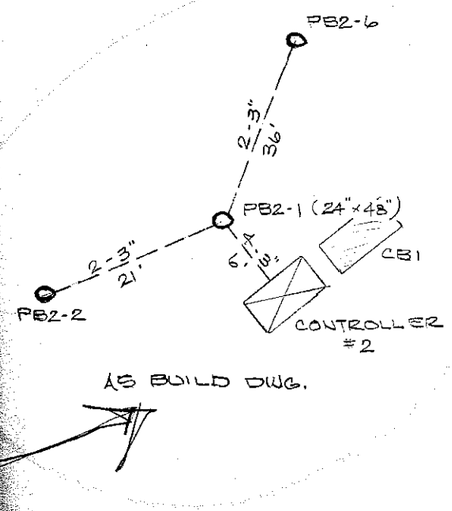

STATE PROJECT NUMBER: 6999-10-75	HWY: WESTON AVENUE	COUNTY: MARATHON	LIGHTING PLAN	SCALE, FEET 0 20 40	SHEET NO: 61	E

LEGEND

- CONTROL CABINET
- NONMETALLIC CONDUIT 2", UNLESS OTHERWISE NOTED
- SIGNAL HEAD, PEDESTAL MOUNT
- (XX) SIGNAL HEAD, MAST-ARM MOUNT
- PEDESTRIAN HEAD WITH PUSH BUTTON
- LOOP DETECTOR CONDUIT 1" NONMETALLIC
- LOOP DETECTOR IN 1" NONMETALLIC CONDUIT
- PULL BOX, 24" X 36"
- PULL BOX, 24" X 42"
- 8 SIGNAL HEAD NUMBER
- R RED CIRCULAR INDICATOR
- Y YELLOW CIRCULAR INDICATOR
- G GREEN CIRCULAR INDICATOR
- YELLOW ARROW
- GREEN ARROW
- DON'T WALK INDICATOR 12" / WALK INDICATOR 12"

NOTE: ALL LENSES ARE 12-INCH

GRAYSHADE REPRESENTS EXISTING

MATCH LINE STA 35+84

N

CTH X

WESTON AVE.

10' MULTI-USE PATH

5' CONC. SIDEWALK

I/C CABLE

6 - 6'X20' 3 TURNS EACH

2 - 6'X20' 3 TURNS EACH

230' TO STOP BAR

6'X20' 3 TURNS

SEE NEXT PAGE FOR AS BUILD

PB1 PB2 PB3 PB4 PB5 PB6 PB7 PB8 PB9 PB10 PB11 PB12 PB13 PB14 PB15 PB16 PB17 (24"x42")

SB1 SB2 SB3 SB4 SB5 SB6 SB7 SB8 SB9 SB10 SB11 SB12

CB1

FUT.11 FUT.12 FUT.51 FUT.52

196+00 197+00 198+00 199+00 200+00 201+00

MATCH LINE STA 201+73

MATCH LINE STA 39+50

CONSTRUCTION NOTES:

1. * LOCATION IS TO FRONT CENTER OF DETECTOR LOOP.
2. THE CONTRACTOR WILL HAVE THE PULL BOXES AND CONDUIT RUNS INSPECTED BEFORE PLACING SIGNAL CABLE INTO SYSTEM.
3. THE LOCATIONS OF EXISTING AND PROPOSED UTILITY INSTALLATIONS ARE APPROXIMATE. THERE MAY BE OTHER UTILITY INSTALLATIONS WITHIN THE PROJECT WHICH ARE NOT SHOWN
4. THE ENGINEER SHALL ADJUST THE LOCATIONS OF ITEMS UNDER THIS CONTRACT TO AVOID CONFLICT WITH EXISTING UTILITY FACILITIES.
5. FOLDING STOP SIGNS SHALL BE INSTALLED ON SB1, SB4, SB7, AND SB13, AND ARE INCIDENTAL TO THE SIGNAL POLE AND/OR SIGNAL STANDARD BID ITEM.
6. SEE LIGHTING PLAN SHEETS FOR ADDITIONAL DETAILS.

WISCONSIN
JEFFREY G. FAIT
E-33536
FOX POINT, WI
PROFESSIONAL ENGINEER

TRAFFIC CONTROL SIGNAL
CTH X (CAMP PHILLIPS ROAD) & WESTON AVENUE
MARATHON COUNTY

SIGNAL NO. SCALE 0 20

WISCONSIN DEPARTMENT OF TRANSPORTATION

APPROVAL RECOMMENDED

Date_____ DISTRICT TRAFFIC ENGINEER

APPROVED

Date_____ STATE TRAFFIC ENGINEER

DISTRICT CONTACT:
DESIGNED BY: TAD, INC.

PAGE 1 OF 11

PROJECT NO: 6999-10-75	HWY: CTH X	COUNTY: MARATHON	TRAFFIC SIGNAL PLAN	SCALE, FEET 0 20 40	SHEET NO: 62	E

FILE NAME : $$....designfile....$$ PLOT DATE : $$...plottingdate...$$ PLOT BY : $$...plotuser...$$ PLOT NAME : PLOT SCALE : $$.....plotscale.....$$ WISDOT/CADDS SHEET 42

LEVELS ON • 1,2,3,4,5,6,7,8,9,10,11,12,13,14,15,16,17,18,19,20,21,22,23,24,25,27,28,29,30,31,32,33,34,35,36,37,38,39,40,41,42,43,44,45,46,47,48,49,50,51,52,53,54,55,56,57,58,59,60,61,62,63

N

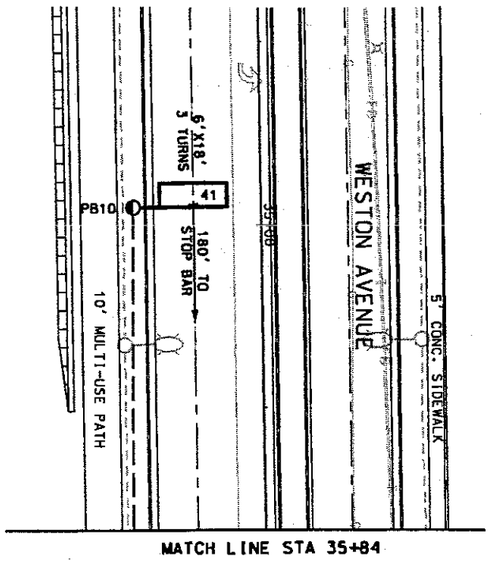

MATCH LINE STA 35+84

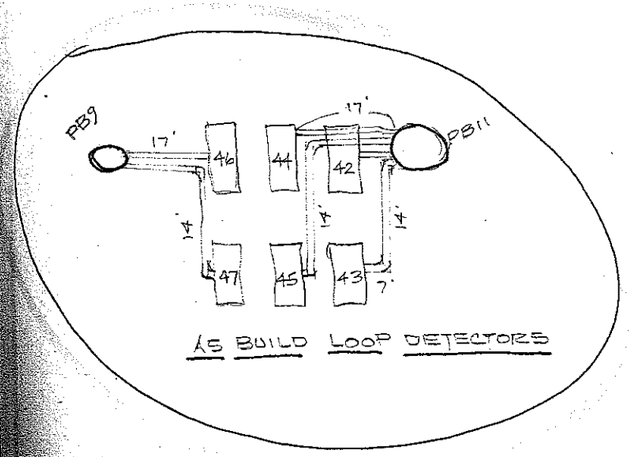

MATCH LINE STA 39+50

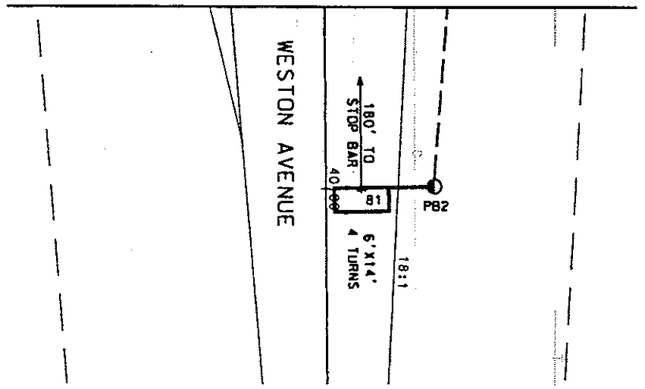

TRAFFIC CONTROL SIGNAL
CTH X (CAMP PHILLIPS ROAD) &
WESTON AVENUE
MARATHON COUNTY
SIGNAL NO. SCALE 0 20
DISTRICT CONTACT:
DESIGNED BY: TAD, INC. PAGE 2 OF 11

PROJECT NO: 6999-10-75	HWY: CTH X	COUNTY: MARATHON	TRAFFIC SIGNAL PLAN	SCALE, FEET 0 20 40	SHEET NO: 03	E

$$....designfile....$$ PLOT DATE : $$...plottingdate...$$ PLOT BY : $$...plotuser...$$ PLOT NAME : PLOT SCALE : $$.....plotscale.....$$ WISDOT/CADDS SHEET 42

N

SEQUENCE OF OPERATION

NOT USED | ⇄ | NOT USED | ⇅

RING 1

	HEAD NUMBERS	01 R/W	01 CLEAR TO	02 R/W	02 CLEAR TO	03 R/W	03 CLEAR TO	04 R/W	04 CLEAR TO	FLASH
			**		**		**		**	
01										
02	5,6,7,8	R	R R	G	Y R	R	R R	R	R R	R
03										
04	9,10,11,12	R	R R	R	R R	R	R R	R	R R	R
05										
06	1,2,3,4	R	R R	R	R R	R	R R	R	R R	R
07										
08	13,14,15,16	R	R R	R	R R	R	R R	R	R R	R
02P	21,22	DW	DW DW	*	DW DW	DW	DW DW	DW	DW DW	
04P	41,42	DW	DW DW	DW	DW DW	DW	DW DW	*	DW DW	
06P	61,62	DW	DW DW	DW	DW DW	DW	DW DW	DW	DW DW	
08P	81,82	DW	DW DW	DW	DW DW	DW	DW DW	DW	DW DW	

NOT USED | ⇆ | NOT USED | ⇵

RING 2

	HEAD NUMBERS	05 R/W	05 CLEAR TO	06 R/W	06 CLEAR TO	07 R/W	07 CLEAR TO	08 R/W	08 CLEAR TO
			**		**		**		**
01									
02	5,6,7,8	R	R R	R	R R	R	R R	R	R R
03									
04	9,10,11,12	R	R R	R	R R	R	R R	R	R R
05									
06	1,2,3,4	R	R R	G	Y R	R	R R	R	R R
07									
08	13,14,15,16	R	R R	R	R R	R	R R	G	Y R
02P	21,22	DW	DW DW	DW	DW DW	DW	DW DW	DW	DW DW
04P	41,42	DW	DW DW	DW	DW DW	DW	DW DW	DW	DW DW
06P	61,62	DW	DW DW	*	DW DW	DW	DW DW	DW	DW DW
08P	81,82	DW	DW DW	DW	DW DW	DW	DW DW	*	DW DW

BARRIER

** CLEARANCE TO A PHASE IN CONFLICT WITH THIS PHASE ON (SEE CHART 1 BELOW)

* WHEN CALLED, TIMED STEADY WALK, THEN FLASHING DON'T WALK, THEN GOES TO STEADY DON'T WALK.

CHART 1

PHASE ON	NONCONFLICTING PHASE ALLOWED TO TIME CONCURRENTLY	PHASES IN CONFLICT WITH PHASE ON
01		
02	6	4,8
03		
04	8	2,6
05		
06	2	4,8
07		
08	4	2,6

DETECTOR LOGIC

DETECTOR NUMBER	AMPLIFIER CHANNEL NUMBER	DETECTOR OPERATION: CALLS AND EXTENDS	DETECTOR OPERATION: CALLS ONLY	DETECTOR OPERATION: EXTENDS ONLY	PHASE CALLED	PHASE EXTENDED	DETECTOR DISCONNECT PHASE	CALLING DELAY	EXTENSION STRETCH	SIZE	NUMBER OF TURNS
FUT.11	1	X			1	1				6'X20'	3
FUT.12	1	X			1	1				6'X20'	3
21	2	X			2	2				6'X20'	3
41	4			X		4			X	6'X18'	3
42	5	X			4	4				6'X20'	3
43	5	X			4	4				6'X20'	3
44	6	X			4	4				6'X20'	3
45	6	X			4	4				6'X20'	3
46	7	X			4	4		X		6'X20'	3
47	7	X			4	4		X		6'X20'	3
FUT.51	8	X			5	5				6'X20'	3
FUT.52	8	X			5	5				6'X20'	3
61	9	X			6	6				6'X20'	3
81	11			X		8			X	6'X14'	3
82	12	X			8	8				6'X20'	3
83	12	X			8	8				6'X20'	3
84	13	X			8	8				6'X20'	3
85	13	X			8	8				6'X20'	3
86	14	X			8	8		X		6'X20'	3
87	14	X			8	8		X		6'X20'	3

CONTROLLER LOGIC

PHASE NUMBER	PHASE LOCKING	DUAL ENTRY W / O	PHASE RECALL	PHASE ACTIVE
1				
2	X	6	MIN.	
3				
4		8		
5				
6	X	2	MIN.	
7				
8		4		

OVERLAPS

O.L. "A" =
O.L. "B" =
O.L. "C" =
O.L. "D" =

TYPE OF INTERCONNECT	
NONE	
TBC	
CLOSED LOOP	
HARDWIRE	X
TONE (FREQ)	

TYPE OF PRE-EMPT	
NONE	X
RAILROAD	
EMERGENCY VEHICLE	

TYPE OF LIGHTING	
NONE	
IN TRAFFIC CONTROL CABINET	X
IN SEPARATE CONTROL CABINET	

GENERAL NOTES:

1. ANY ACTUATED PHASE FOR WHICH THERE IS NO CALL SHALL BE SKIPPED.
2. WHEN ONE PHASE IS ON ALONE, ANY NONCONFLICTING PHASE MAY START TIMING CONCURRENTLY WITHOUT A CLEARANCE INTERVAL. (SEE CHART 1 AT LEFT.)
3. IF ANY OPPOSING THRU PHASES ARE TIMING CONCURRENTLY, THEY SHALL TERMINATE TOGETHER DUE TO PERMISSIVE LEFT TURN CONFLICT.

CTH X & WESTON AVENUE
MARATHON COUNTY

SIGNAL NO.

CONTOLLER TYPE: EPAC

DATE

PAGE NO. 3 OF 11

PROJECT NO: 6999-10-75 | HWY: CTH X | COUNTY: MARATHON | SEQUENCE OF OPERATION | SCALE, FEET 0 N/A | SHEET NO: 4 | E

LEVELS ON = 1,2,3,4,5,6,7,8,9,10,11,12,13,14,15,16,17,18,19,20,21,22,23,24,25,27,28,29,30,31,32,33,34,35,36,37,38,39,40,41,42,43,44,45,46,47,48,49,50,51,52,53,54,55,56,57,58,59,60,61,62,63

FILE NAME : $$....designfile....$$ PLOT DATE : $$...plottingdate...$$ PLOT BY : $$...plotuser...$$ PLOT NAME : PLOT SCALE : $$.....plotscale.....$$ WISDOT/CADDS SHEET 42

CTH X & WESTON AVENUE

SIGNAL CABLE

FROM	TO	NO. OF CONDUCTORS	HEAD NO.	COLOR CODE
CB1	SB1	12	13	RED. ORANGE. GREEN. WHITE
			82	BLUE. BLACK. WHITE
			B	WHITE/BLACK. BLACK/WHITE
CB1	SB2	12	10	RED. ORANGE. GREEN. WHITE
			16	RED/BLACK. ORANGE/BLACK. GREEN/BLACK. WHITE
CB1	SB3	12	11	RED. ORANGE. GREEN. WHITE
			41	BLUE. BLACK. WHITE
			B	WHITE/BLACK. BLACK/WHITE
			B	BLUE/BLACK. ORANGE/BLACK
CB1	SB4	12	1	RED. ORANGE. GREEN. WHITE
			62	BLUE. BLACK. WHITE
CB1	SB5	12	4	RED. ORANGE. GREEN. WHITE
			6	RED/BLACK. ORANGE/BLACK. GREEN/BLACK. WHITE
CB1	SB6	12	7	RED. ORANGE. GREEN. WHITE
			21	BLUE. BLACK. WHITE
			B	WHITE/BLACK. BLACK/WHITE
CB1	SB7	12	9	RED. ORANGE. GREEN. WHITE
			42	BLUE. BLACK. WHITE
			B	WHITE/BLACK. BLACK/WHITE
CB1	SB8	12	12	RED. ORANGE. GREEN. WHITE
			14	RED/BLACK. ORANGE/BLACK. GREEN/BLACK. WHITE
CB1	SB9	12	15	RED. ORANGE. GREEN. WHITE
			81	BLUE. BLACK. WHITE
			B	WHITE/BLACK. BLACK/WHITE
CB1	SB10	12	5	RED. ORANGE. GREEN. WHITE
			22	BLUE. BLACK. WHITE
			B	WHITE/BLACK. BLACK/WHITE
CB1	SB11	12	2	RED. ORANGE. GREEN. WHITE
			8	RED/BLACK. ORANGE/BLACK. GREEN/BLACK. WHITE
CB1	SB12	12	3	RED. ORANGE. GREEN. WHITE
			61	BLUE. BLACK. WHITE

USE WHITE CONDUCTOR AS NEUTRAL

ELECTRICAL WIRE
TRAFFIC SIGNALS. 10 AWG
EQUIPMENT GROUNDING
CONDUCTOR (GREEN)

FROM	TO
CB1	SB1
SB1	SB2
SB2	SB3
SB3	SB4
SB4	SB5
SB5	SB6
SB6	SB7
SB7	SB8
SB8	SB9
SB9	SB10
SB10	SB11
SB11	SB12
SB12	CB1

ELECTRICAL WIRE
TRAFFIC SIGNALS. 10 AWG
PULL BOX BONDING JUMPER (GREEN)

FROM	TO
CB1	PB1
SB2	PB3
SB3	PB4
SB4	PB5
SB5	PB7
SB6	PB8
SB7	PB9
SB8	PB11
SB9	PB12
SB10	PB13
SB11	PB15
CB1	PB16

STATE PROJECT NUMBER:6999-10-75	HWY: CTH X	COUNTY: MARATHON	TRAFFIC SIGNAL CABLE ROUTING	SCALE, FEET 0 N/A	SHEET NO: 65	E

LEVELS ON • 1,2,3,4,5,6,7,8,9,10,11,12,13,14,15,16,17,18,19,20,21,22,23,24,25,27,28,29,30,31,32,33,34,35,36,37,38,39,40,41,42,43,44,45,46,47,48,49,50,51,52,53,54,55,56,57,58,59,60,61,62,63

FILE NAME : $$....designfile....$$ PLOT DATE : $$...plottingdate...$$ PLOT BY : $$...plotuser...$$ PLOT NAME : ORG DATE : Originator : Dist PLOT SCALE : $$.....plotscale.....$$

WISDOT/CADDS SHEET 42

N

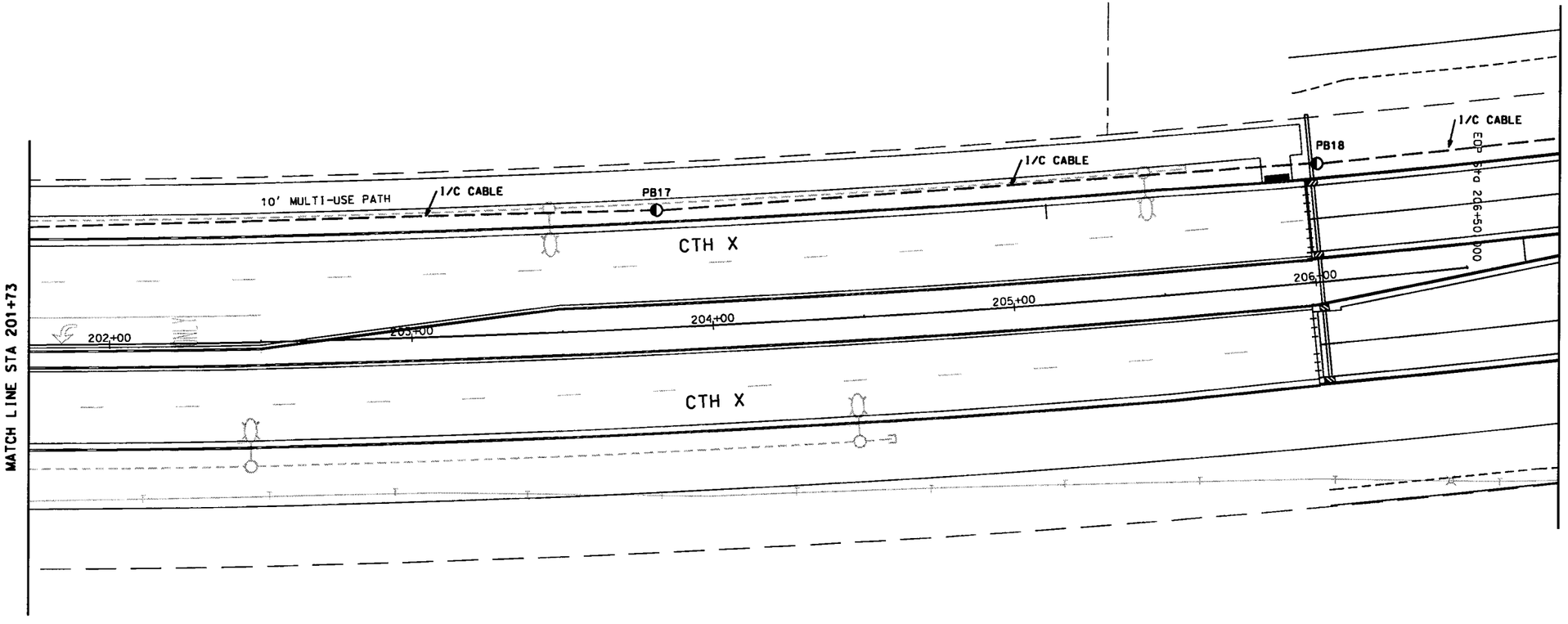

TRAFFIC CONTROL SIGNAL

CTH X (CAMP PHILLIPS ROAD) & WESTON AVENUE
MARATHON COUNTY

SIGNAL NO.

SCALE 0 20

DISTRICT CONTACT:
DESIGNED BY: TAD, INC.

PAGE 5 OF 11

PROJECT NO: 6999-10-75	HWY: CTH X	COUNTY: MARATHON	INTERCONNECT PLAN	SCALE, FEET 0 20 40	SHEET NO: 16	E

FILE NAME : $$....designfile....$$ PLOT DATE : $$...plottingdate...$$ PLOT BY : $$...plotuser...$$ PLOT NAME : PLOT SCALE : $$.....plotscale.....$$ WISDOT/CADDS SHEET 42

LEVELS ON • 1,2,3,4,5,6,7,8,9,10,11,12,13,14,15,16,17,18,19,20,21,22,23,24,25, 27,28,29,30,31,32,33,34,35,36,37,38,39,40,41,42,43,44,45,46,47,48,49,50,51,52,53,54,55,56,57,58,59,60,61,62,63

N

WESTVIEW BLVD.

I/C CABLE IN EXISTING CONDUIT

EXPB2

I/C CABLE

I/C CABLE

COIL LOOP OF 50' EXTRA FEET OF INTERCONNECT CABLE IN EXISTING PULL BOX

EXPB1

I/C CABLE

I/C CABLE IN EXISTING CONDUIT

CTH X

CTH X

MATCH LINE 1

MATCH LINE 2

WESTVIEW BLVD. (FUTURE)

TRAFFIC CONTROL SIGNAL

CTH X (CAMP PHILLIPS ROAD) & WESTON AVENUE

MARATHON COUNTY

SIGNAL NO.

SCALE 0 20

DISTRICT CONTACT:

DESIGNED BY: TAD, INC.

PAGE 6 OF 11

PROJECT NO: 6999-10-75	HWY: CTH X	COUNTY: MARATHON	INTERCONNECT PLAN	SCALE, FEET 0 20 40	SHEET NO: 67	E

FILE NAME : $$....designfile....$$ PLOT DATE : $$...plottingdate...$$ PLOT BY : $$...plotuser...$$ PLOT NAME : PLOT SCALE : $$.....plotscale.....$$

WISDOT/CADDS SHEET 42

LEVELS ON • 1,2,3,4,5,6,7,8,9,10,11,12,13,14,15,16,17,18,19,20,21,22,23,24,25, 27, 28, 29, 30, 31, 32, 33, 34, 35, 36, 37, 38, 39, 40, 41, 42, 43, 44, 45, 46, 47, 48, 49, 50, 51, 52, 53, 54, 55, 56, 57, 58, 59, 60, 61, 62, 63

N

MATCH LINE 2

MATCH LINE 3

1/C CABLE

PB19

1/C CABLE

PB20

1/C CABLE

CTH X

CTH X

TRAFFIC CONTROL SIGNAL

CTH X (CAMP PHILLIPS ROAD) &
WESTON AVENUE
MARATHON COUNTY

SIGNAL NO.

SCALE 0 20

DISTRICT CONTACT:
DESIGNED BY: TAD, INC.

PAGE 7 OF 11

PROJECT NO: 6999-10-75	HWY: CTH X	COUNTY: MARATHON	INTERCONNECT PLAN	SCALE, FEET 0 20 40	SHEET NO: 68	E

FILE NAME : $$....designfile....$$ PLOT DATE : $$...plottingdate...$$ PLOT BY : $$...plotuser...$$ PLOT NAME : PLOT SCALE : $$.....plotscale.....$$

LEVELS ON • 1,2,3,4,5,6,7,8,9,10,11,12,13,14,15,16,17,18,19,20,21, 22,23,24,25, 27,28,29,30,31,32,33,34,35,36,37,38,39,40,41,42,43,44,45,46,47,48,49,50,51,52,53,54,55,56,57,58,59,60,61,62,63

N

MATCH LINE 3

I/C CABLE

I/C CABLE

PB21

CTH X

CTH X

COIL 50 EXTRA FEET OF INTERCONNECT CABLE IN EXISTING PULL BOX

EXPB3

5-3 INCH
1-2 INCH
CONDUIT

STH 29 EB OFF RAMP

2-3"

2-3"

2-3"

STH 29 EB ON RAMP

GUY

TRAFFIC CONTROL SIGNAL

CTH X (CAMP PHILLIPS ROAD) &
WESTON AVENUE
MARATHON COUNTY

SIGNAL NO.

SCALE 0 20

DISTRICT CONTACT:
DESIGNED BY: TAD, INC.

PAGE 8 OF 11

PROJECT NO: 6999-10-75	HWY: CTH X	COUNTY: MARATHON	INTERCONNECT PLAN	SCALE, FEET 0 20 40	SHEET NO: 69	E

LEVELS ON • 1,2,3,4,5,6,7,8,9,10,11,12,13,14,15,16,17,18,19,20,21, 22,23,24,25, 27,28,29,30,31,32,33,34,35,36,37,38,39,40,41,42,43,44,45,46,47,48, 49,50,51,52,53,54,55, 56,57,58,59,60,61,62,63

FILE NAME : $$....designfile....$$ PLOT DATE : $$...plottingdate...$$ PLOT BY : $$...plotuser...$$ PLOT NAME : PLOT SCALE : $$.....plotscale.....$$ WISDOT/CADDS SHEET 42

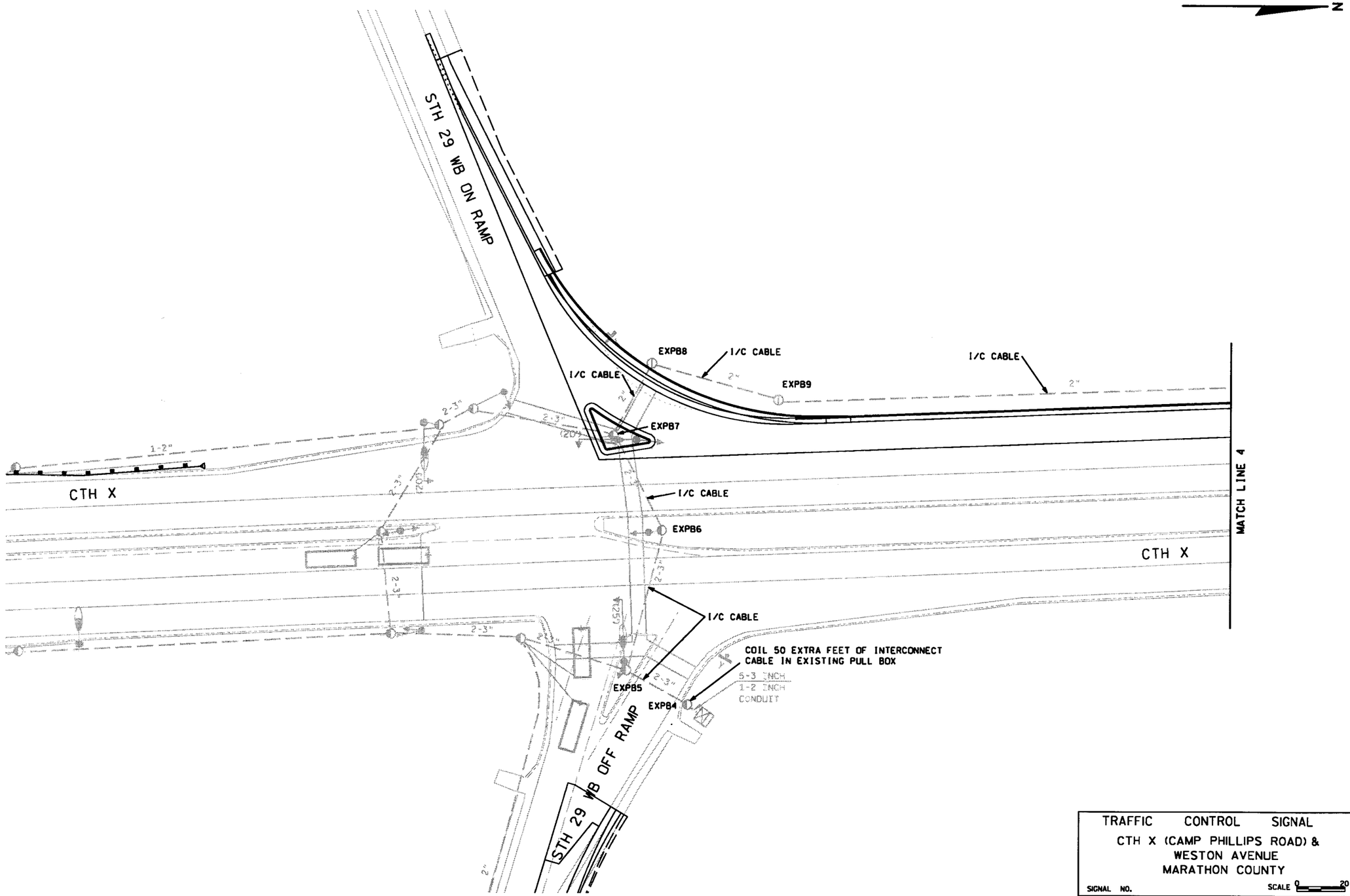

TRAFFIC CONTROL SIGNAL
CTH X (CAMP PHILLIPS ROAD) &
WESTON AVENUE
MARATHON COUNTY

SIGNAL NO. SCALE 0 20

DISTRICT CONTACT:
DESIGNED BY: TAD, INC.

PAGE 9 OF 11

PROJECT NO: 6999-10-75	HWY: CTH X	COUNTY: MARATHON	INTERCONNECT PLAN	SCALE, FEET 0 20 40	SHEET NO: 70	E

FILE NAME : $$....designfile....$$ PLOT DATE : $$...plottingdate...$$ PLOT BY : $$...plotuser...$$ PLOT NAME : PLOT SCALE : $$.....plotscale.....$$ WISDOT/CADDS SHEET 42

N

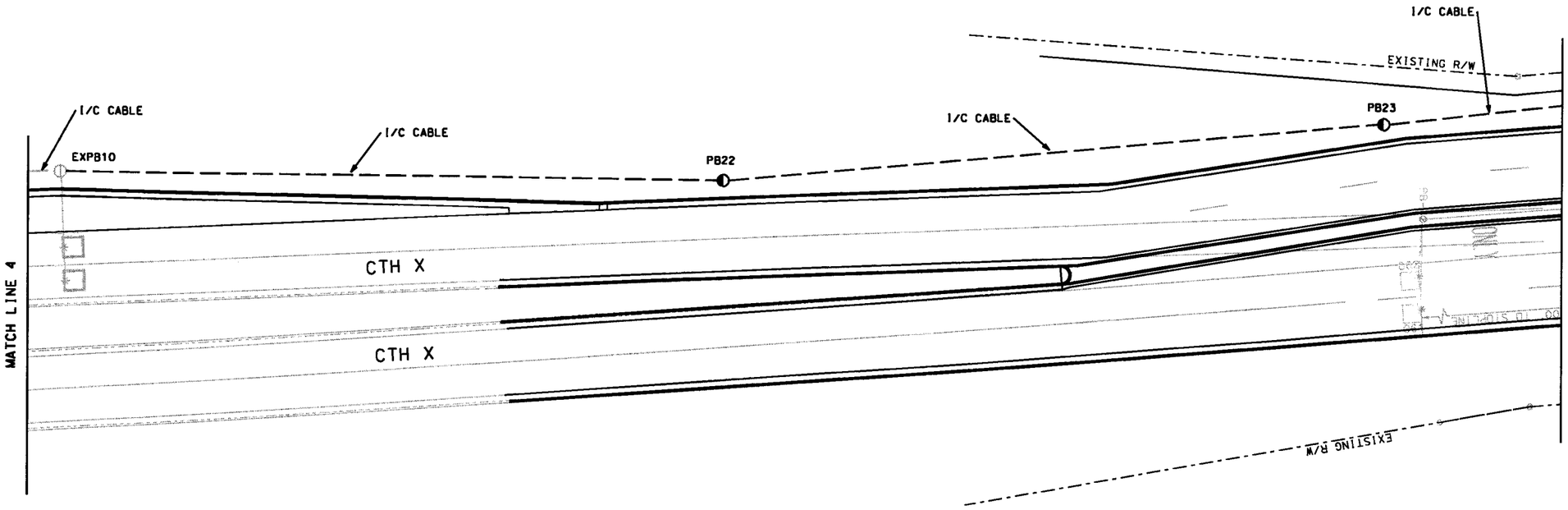

TRAFFIC CONTROL SIGNAL

CTH X (CAMP PHILLIPS ROAD) &
WESTON AVENUE
MARATHON COUNTY

SIGNAL NO.

SCALE 0 20

DISTRICT CONTACT:
DESIGNED BY: TAD, INC.

PAGE 10 OF 11

PROJECT NO: 6999-10-75	HWY: CTH X	COUNTY: MARATHON	INTERCONNECT PLAN	SCALE, FEET 0 20 40	SHEET NO: 7	E

FILE NAME : $$....designfile....$$ PLOT DATE : $$...plottingdate...$$ PLOT BY : $$...plotuser...$$ PLOT NAME : PLOT SCALE : $$.....plotscale.....$$

WISDOT/CADDS SHEET 42

LEVELS ON • 1,2,3,4,5,6,7,8,9,10,11,12,13,14,15,16,17,18,19,20,21,22,23,24,25,27,28,29,30,31,32,33,34,35,36,37,38,39,40,41,42,43,44,45,46,47,48,49,50,51,52,53,54,55,56,57,58,59,60,61,62,63

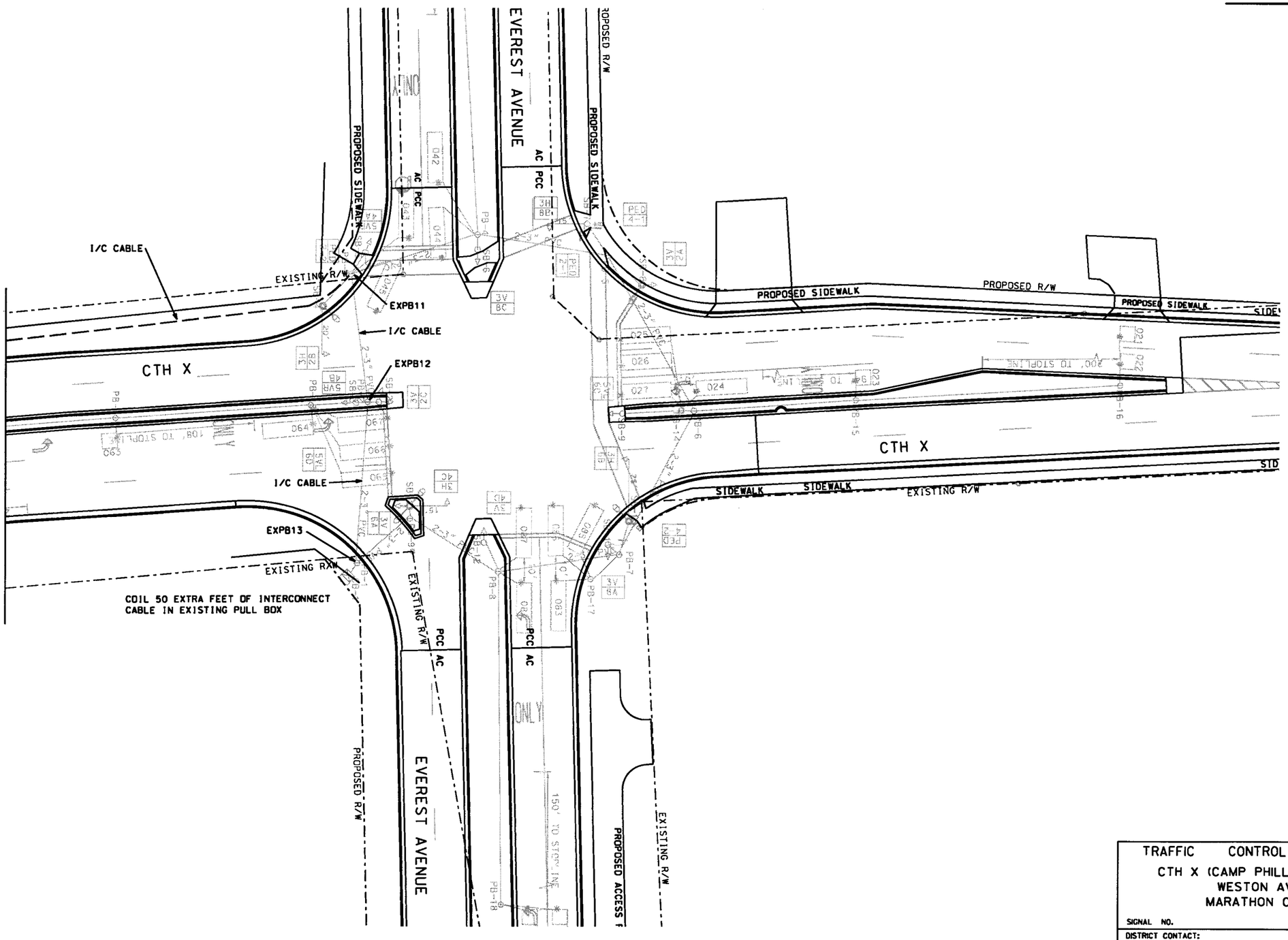

2

TRAFFIC CONTROL SIGNAL

CTH X (CAMP PHILLIPS ROAD) & WESTON AVENUE
MARATHON COUNTY

SIGNAL NO. SCALE 0 20

DISTRICT CONTACT:
DESIGNED BY: TAD, INC.

PAGE 11 OF 11

PROJECT NO: 6999-10-75	HWY: CTH X	COUNTY: MARATHON	INTERCONNECT PLAN	SCALE, FEET 0 20 40	SHEET NO: 12	E

FILE NAME : $$....designfile....$$ PLOT DATE : $$...plottingdate...$$ PLOT BY : $$...plotuser...$$ PLOT NAME : PLOT SCALE : $$.....plotscale.....$$

WISDOT/CADDS SHEET 42

LEVELS ON • 1,2,3,4,5,6,7,8,9,10,11,12,13,14,15,16,17,18,19,20,21, 22,23,24,25, 27,28,29,30,31,32,33,34,35,36,37,38,39,40,41,42,43,44,45,46,47,48,49,50,51,52,53,54,55,56,57,58,59,60,61,62,63

MATCH LINE STA 30+92

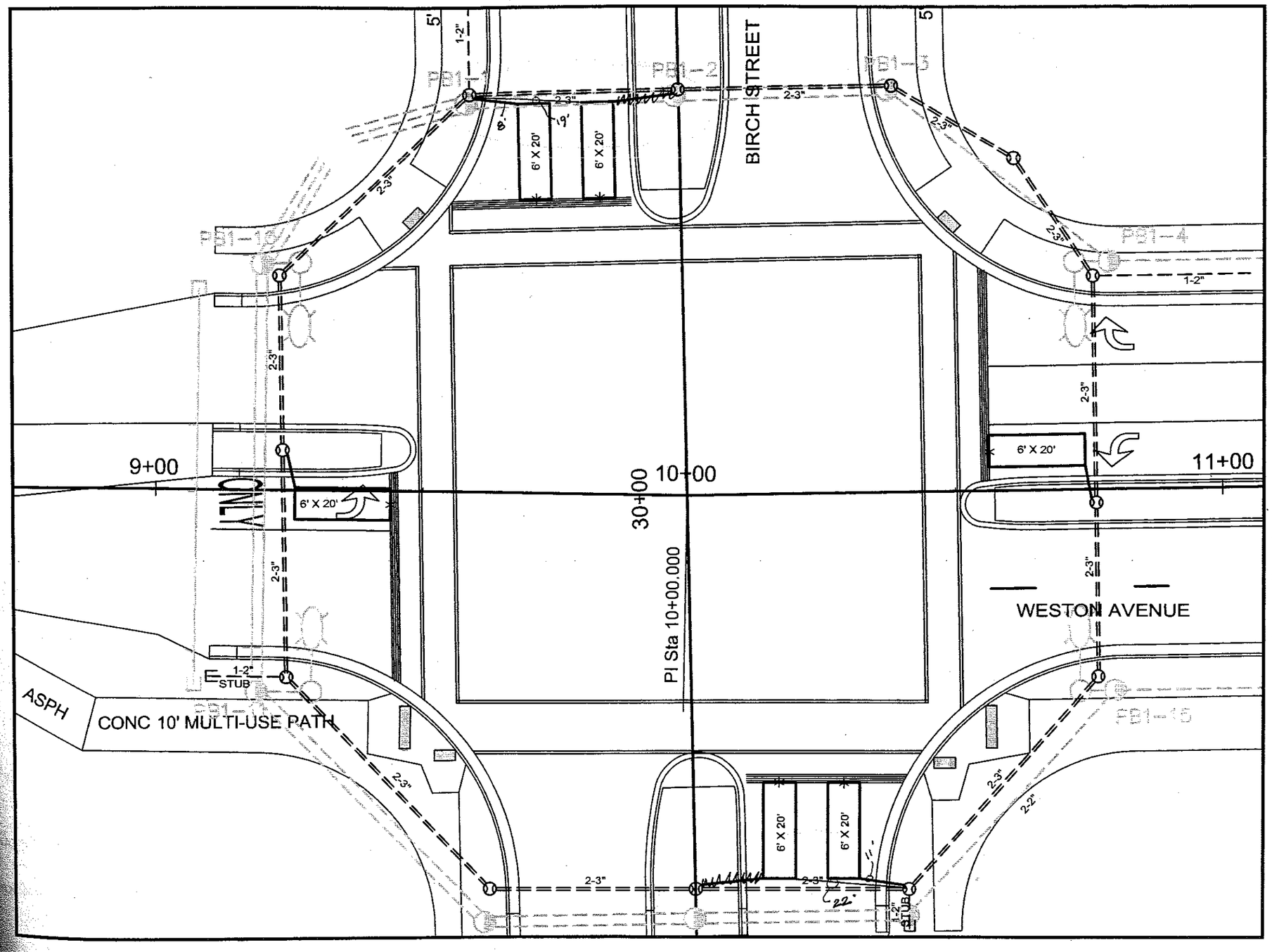

MATCH LINE STA 11+06

CONSTRUCTION NOTES:

1-LOCATION IS TO FRONT CENTER OF LOOP DETECTOR.

2-THE LOCATION OF EXISTING AND PROPOSED UTILITY INSTALLATIONS ARE APPROXIMATE. THERE MAY BE OTHER UTILITY INSTALLATIONS WITHIN THE PROJECT WHICH ARE NOT SHOWN.

3-THE ENGINEER SHALL ADJUST THE LOCATIONS OF ITEMS UNDER CONTRACT TO AVOID CONFLICT WITH EXISTING UTILITY FACILITIES.

LEGEND

- NONMETALLIC CONDUIT
- PULL BOX, 24" X 42"
- PULL BOX, 24" X 36"
- LOOP DETECTOR CONDUIT 1" NONMETALLIC
- LOOP DETECTOR IN 1" NONMETALLIC CONDUIT

PROJECT NUMBER: 6999-10-75	HWY: WESTON AVENUE	COUNTY: MARATHON	CONDUIT PLAN - BIRCH STREET	SHEET NO: 73	E

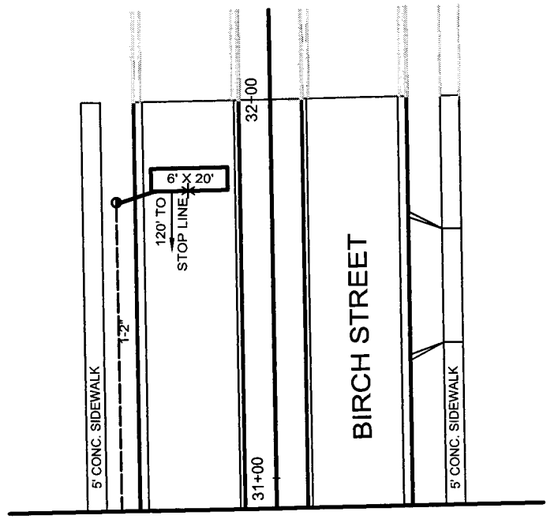

MATCH LINE STA 30+92

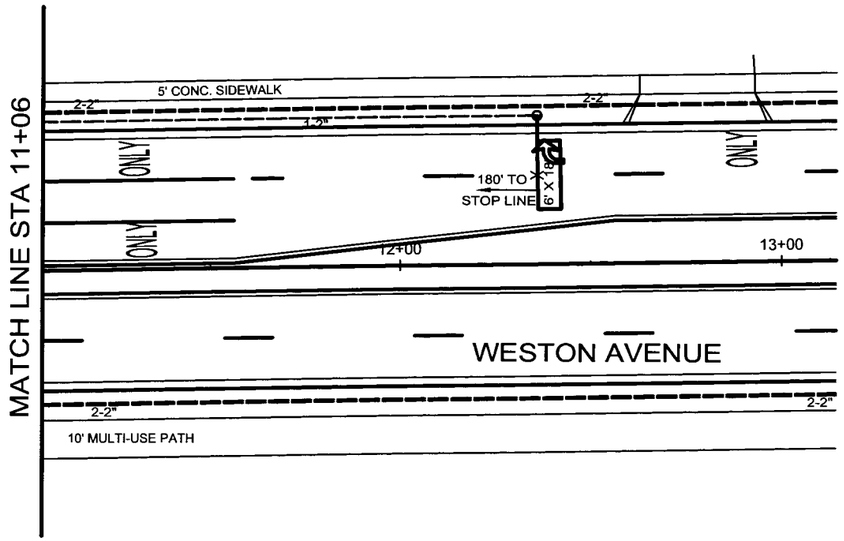

CONSTRUCTION NOTES:

1-LOCATION IS TO FRONT CENTER OF LOOP DETECTOR.

2-THE LOCATION OF EXISTING AND PROPOSED UTILITY INSTALLATIONS ARE APPROXIMATE. THERE MAY BE OTHER UTILITY INSTALLATIONS WITHIN THE PROJECT WHICH ARE NOT SHOWN.

3-THE ENGINEER SHALL ADJUST THE LOCATIONS OF ITEMS UNDER CONTRACT TO AVOID CONFLICT WITH EXISTING UTILITY FACILITIES.

LEGEND

- NONMETALLIC CONDUIT
- PULL BOX, 24" X 42"
- PULL BOX, 24" X 36"
- LOOP DETECTOR CONDUIT 1" NONMETALLIC
- LOOP DETECTOR IN 1" NONMETALLIC CONDUIT

STATE PROJECT NUMBER: 6999-10-75	HWY: WESTON AVENUE	COUNTY: MARATHON	CONDUIT PLAN - BIRCH STREET	SHEET NO: 74	E

P:\DRAFT\32290200 DOT WESTON AVE\INTERSECT 1.dwg, Layout7, 4/1/2004 1:49:36 PM

MATCH LINE STA 40+90

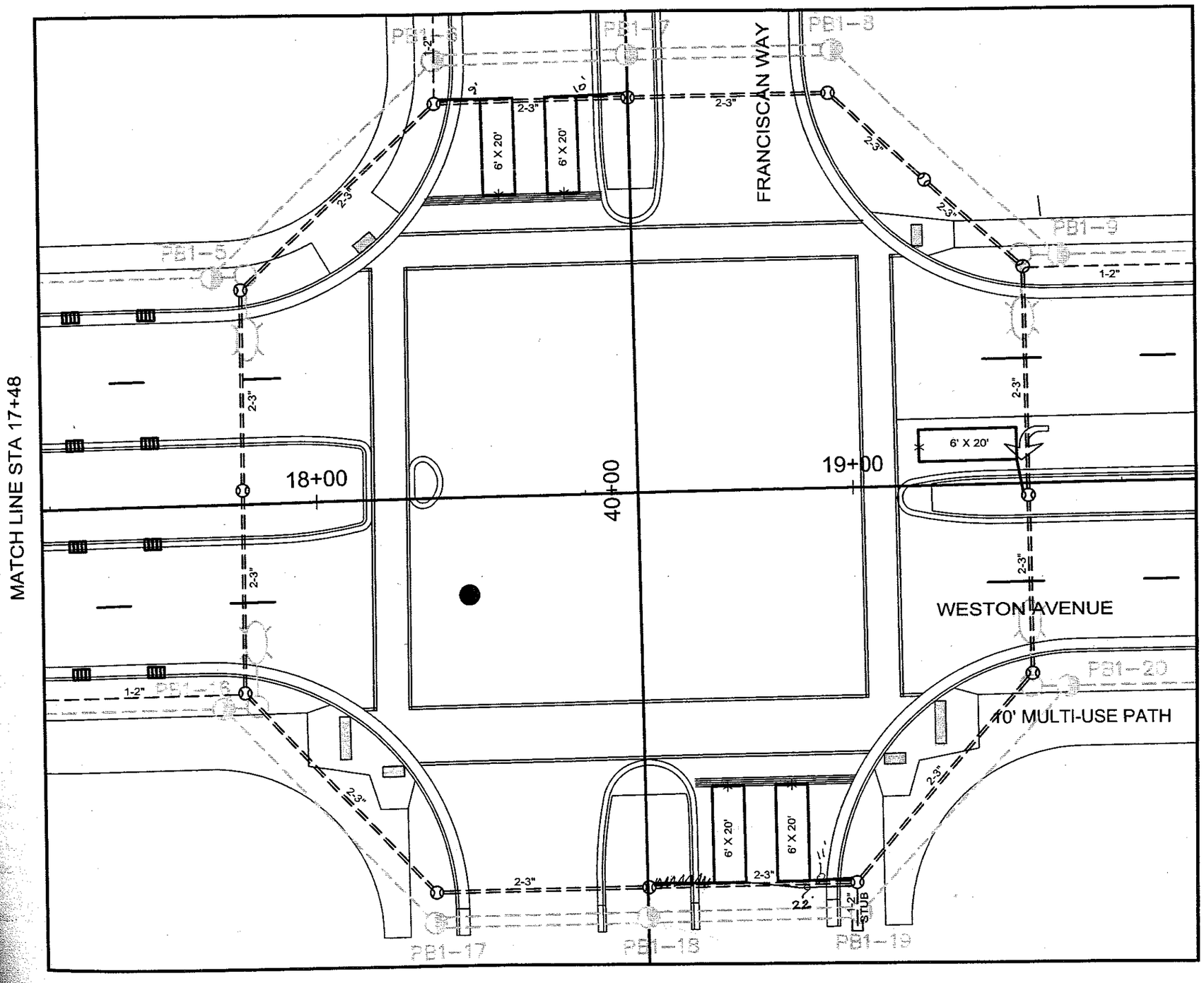

MATCH LINE STA 17+48

MATCH LINE STA 19+64

N

CONSTRUCTION NOTES:

1-LOCATION IS TO FRONT CENTER OF LOOP DETECTOR.

2-THE LOCATION OF EXISTING AND PROPOSED UTILITY INSTALLATIONS ARE APPROXIMATE. THERE MAY BE OTHER UTILITY INSTALLATIONS WITHIN THE PROJECT WHICH ARE NOT SHOWN.

3-THE ENGINEER SHALL ADJUST THE LOCATIONS OF ITEMS UNDER CONTRACT TO AVOID CONFLICT WITH EXISTING UTILITY FACILITIES.

LEGEND

- NONMETALLIC CONDUIT
- PULL BOX, 24" X 42"
- PULL BOX, 24" X 36"
- LOOP DETECTOR CONDUIT 1" NONMETALLIC
- LOOP DETECTOR IN 1" NONMETALLIC CONDUIT

PROJECT NUMBER: 6999-10-75	HWY: WESTON AVENUE	COUNTY: MARATHON	CONDUIT PLAN - FRANCISCAN WAY	SHEET NO: 25	E

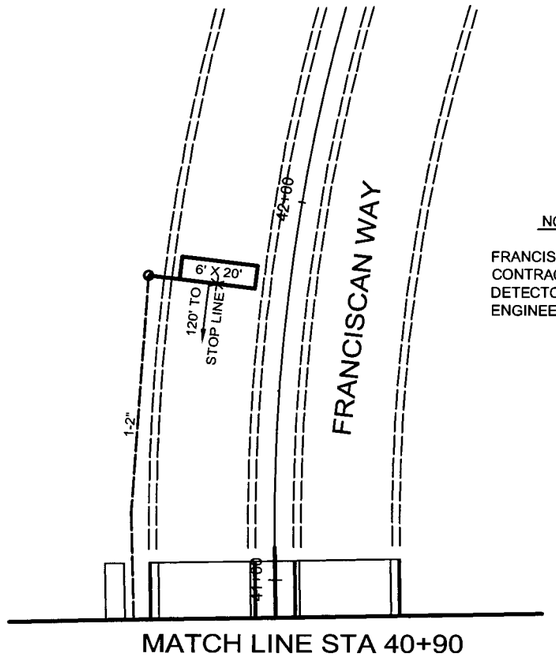

MATCH LINE STA 40+90

NOTE:

FRANCISCAN WAY TO BE CONSTRUCTED BY OTHERS. CONTRACTOR TO COORDINATE INSTALLATION OF LOOP DETECTOR AND CONDUITS WITH VILLAGE OF WESTON'S ENGINEER.

N

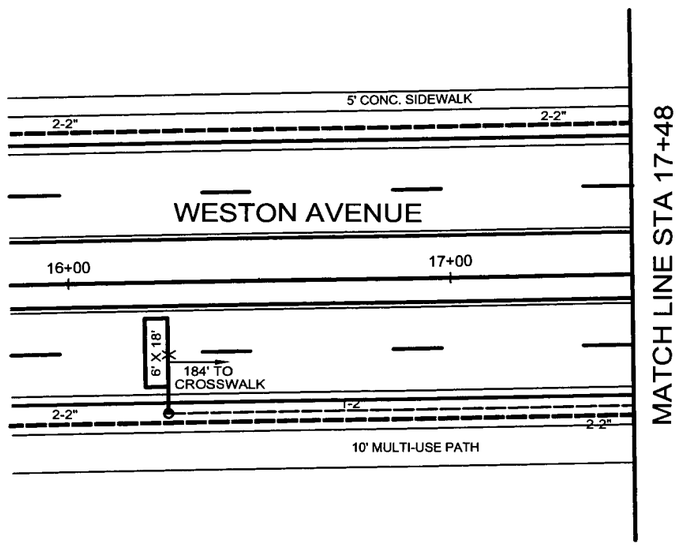

MATCH LINE STA 17+48

MATCH LINE STA 19+64

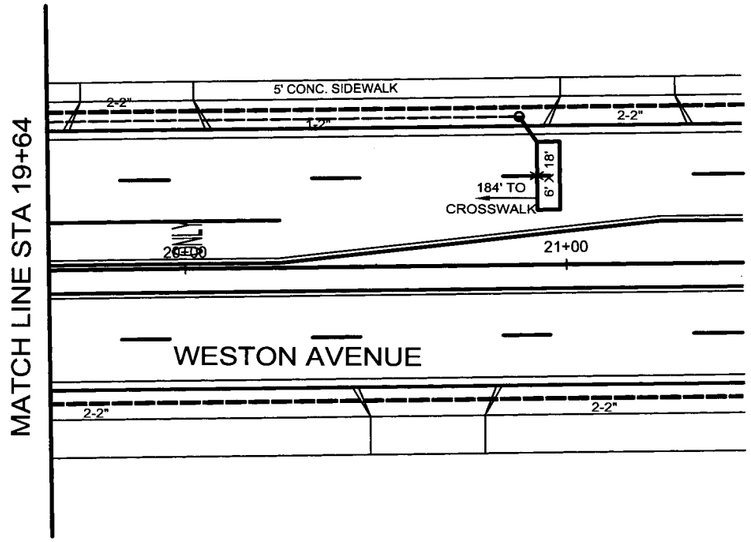

CONSTRUCTION NOTES:

1-LOCATION IS TO FRONT CENTER OF LOOP DETECTOR.

2-THE LOCATION OF EXISTING AND PROPOSED UTILITY INSTALLATIONS ARE APPROXIMATE. THERE MAY BE OTHER UTILITY INSTALLATIONS WITHIN THE PROJECT WHICH ARE NOT SHOWN.

3-THE ENGINEER SHALL ADJUST THE LOCATIONS OF ITEMS UNDER CONTRACT TO AVOID CONFLICT WITH EXISTING UTILITY FACILITIES.

LEGEND

- NONMETALLIC CONDUIT
- PULL BOX, 24" X 42"
- PULL BOX, 24" X 36"
- LOOP DETECTOR CONDUIT 1" NONMETALLIC
- LOOP DETECTOR IN 1" NONMETALLIC CONDUIT

STATE PROJECT NUMBER: 6999-10-75	HWY: WESTON AVENUE	COUNTY: MARATHON	CONDUIT PLAN - FRANCISCAN WAY	SHEET NO: 76	E

P:\DRAFT\32290200 DOT WESTON AVE\INTERSECT 1.dwg, Layout8, 4/1/2004 1:49:55 PM

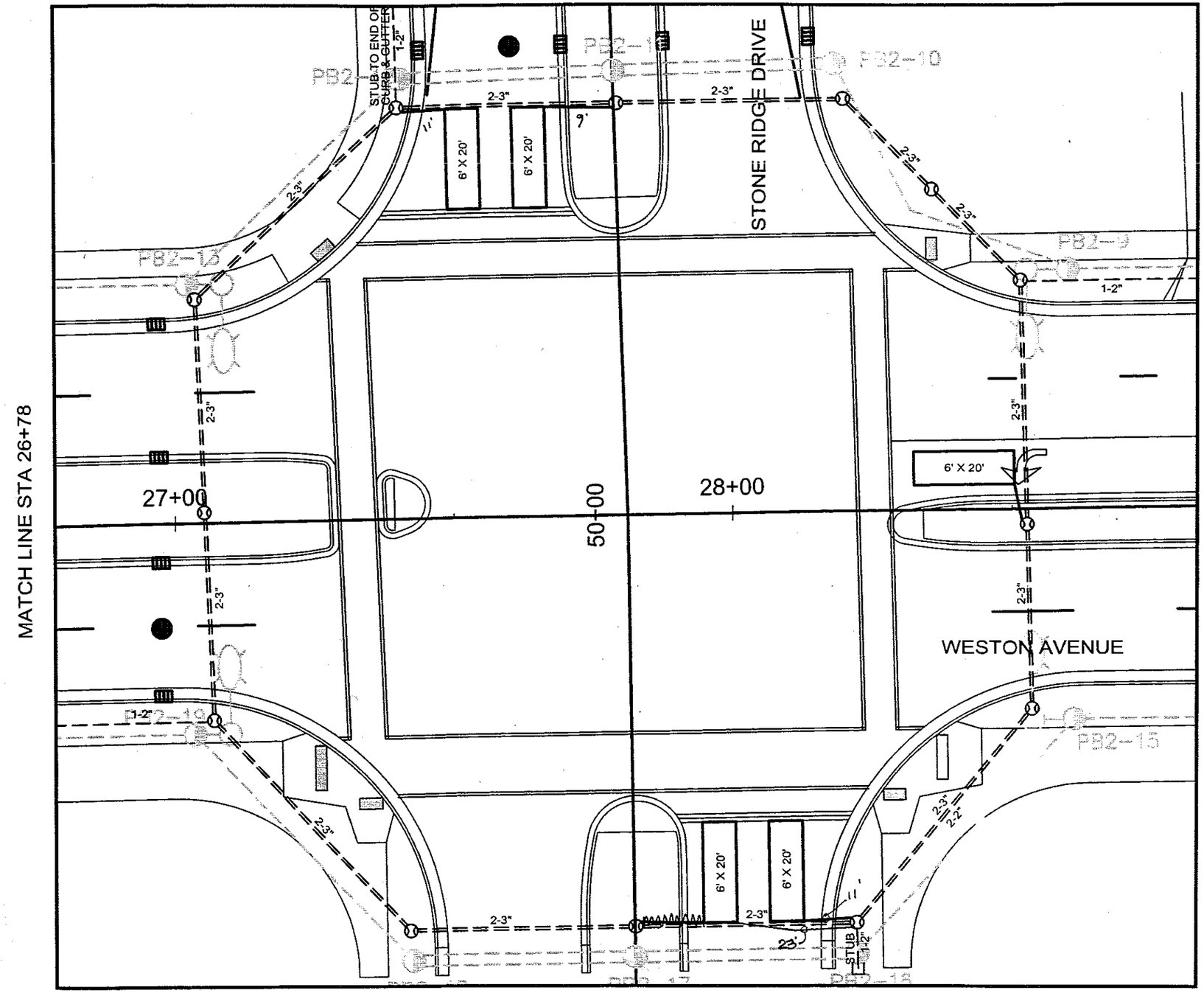

CONSTRUCTION NOTES:

1-LOCATION IS TO FRONT CENTER OF LOOP DETECTOR.

2-THE LOCATION OF EXISTING AND PROPOSED UTILITY INSTALLATIONS ARE APPROXIMATE. THERE MAY BE OTHER UTILITY INSTALLATIONS WITHIN THE PROJECT WHICH ARE NOT SHOWN.

3-THE ENGINEER SHALL ADJUST THE LOCATIONS OF ITEMS UNDER CONTRACT TO AVOID CONFLICT WITH EXISTING UTILITY FACILITIES.

LEGEND

- NONMETALLIC CONDUIT
- PULL BOX, 24" X 42"
- PULL BOX, 24" X 36"
- LOOP DETECTOR CONDUIT 1" NONMETALLIC
- LOOP DETECTOR IN 1" NONMETALLIC CONDUIT

PROJECT NUMBER: 6999-10-75	HWY: WESTON AVENUE	COUNTY: MARATHON	CONDUIT PLAN - STONERIDGE DRIVE	SHEET NO: 27	E

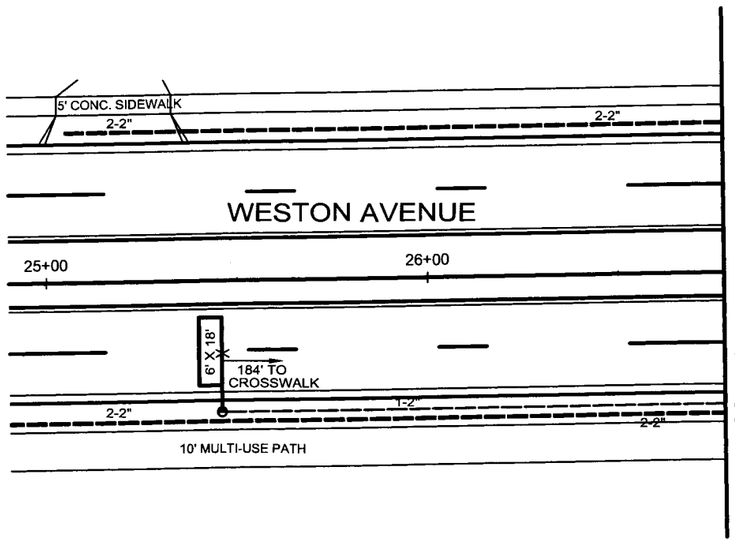

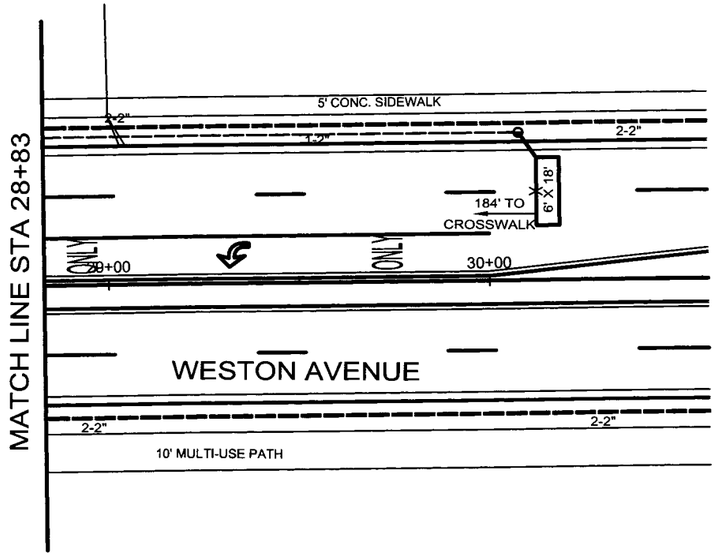

CONSTRUCTION NOTES:

1-LOCATION IS TO FRONT CENTER OF LOOP DETECTOR.

2-THE LOCATION OF EXISTING AND PROPOSED UTILITY INSTALLATIONS ARE APPROXIMATE. THERE MAY BE OTHER UTILITY INSTALLATIONS WITHIN THE PROJECT WHICH ARE NOT SHOWN.

3-THE ENGINEER SHALL ADJUST THE LOCATIONS OF ITEMS UNDER CONTRACT TO AVOID CONFLICT WITH EXISTING UTILITY FACILITIES.

LEGEND

- NONMETALLIC CONDUIT
- PULL BOX, 24" X 42"
- PULL BOX, 24" X 36"
- LOOP DETECTOR CONDUIT 1" NONMETALLIC
- LOOP DETECTOR IN 1" NONMETALLIC CONDUIT

STATE PROJECT NUMBER: 6999-10-75	HWY: WESTON AVENUE	COUNTY: MARATHON	CONDUIT PLAN - STONE RIDGE DRIVE	SHEET NO: 28	E

P:\DRAFT\32290200 DOT WESTON AVE\INTERSECT 1.dwg, Layout9, 4/1/2004 1:50:10 PM

LEGEND

1. EPOXY 4-INCH, WHITE
2. CHANNELIZING EPOXY 8-INCH
3. ARROWS EPOXY TYPE 2
4. WORDS EPOXY
5. STOP LINE EPOXY 18-INCH
6. ISLAND NOSE EPOXY
7. CROSSWALK EPOXY 12-INCH
8. EPOXY 4-INCH, YELLOW

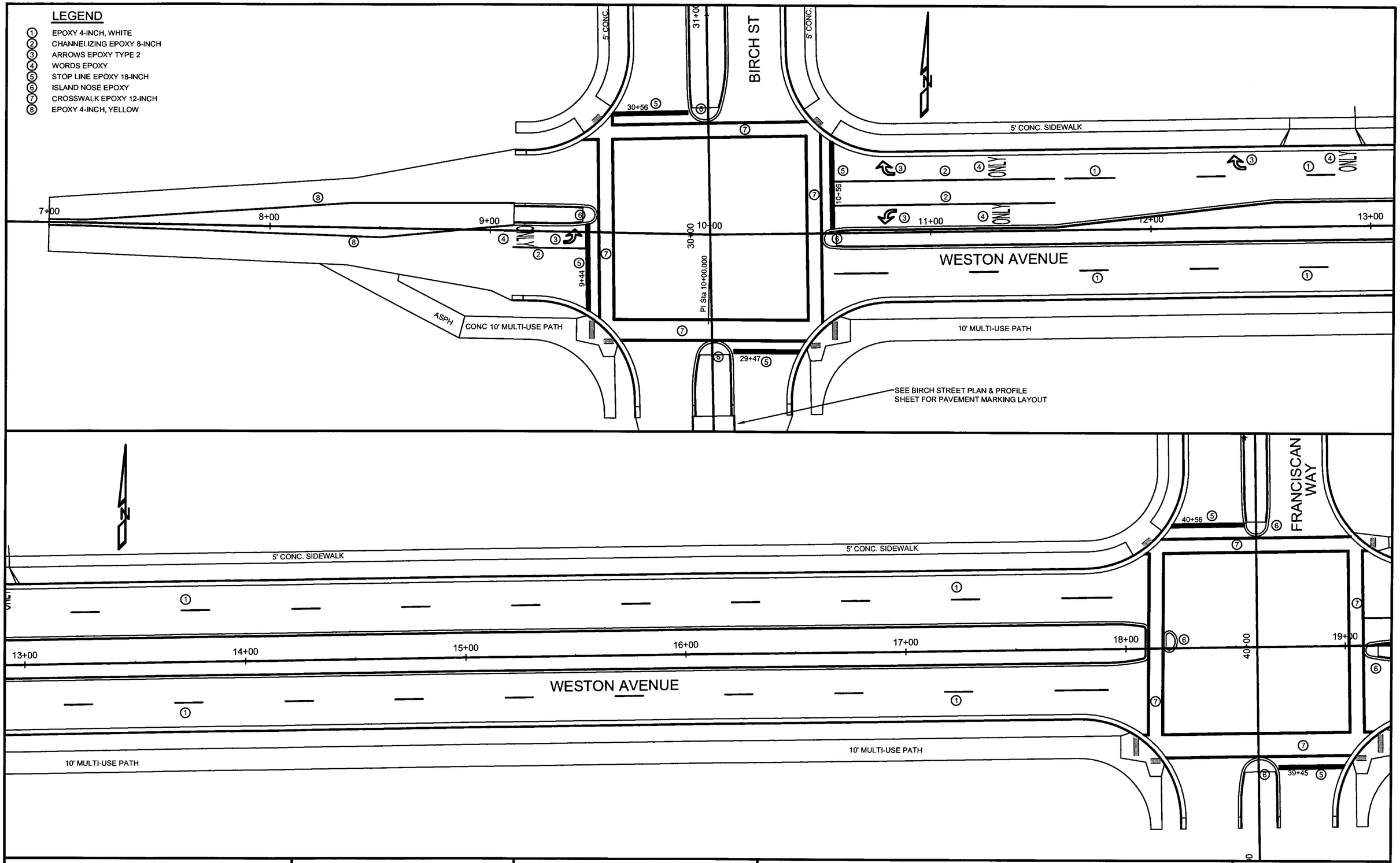

STATE PROJECT NUMBER: 6999-10-75	HWY: WESTON AVENUE	COUNTY: MARATHON	PAVEMENT MARKING: WESTON AVENUE	SHEET NO: 19	E

P:\DRAFT\32290200 DOT WESTON AVE\PAVEMENT MARKING.dwg, Layout1, 04/01/2004 10:46:32 AM

LEGEND

1. EPOXY 4-INCH, WHITE
2. CHANNELIZING EPOXY 8-INCH
3. ARROWS EPOXY TYPE 2
4. WORDS EPOXY
5. STOP LINE EPOXY 18-INCH
6. ISLAND NOSE EPOXY
7. CROSSWALK EPOXY 12-INCH
8. EPOXY 4-INCH, YELLOW

5' CONC. SIDEWALK

5' CONC. SIDEWALK

5' CON

19+00

20+00

21+00

22+00

23+00

24+00

25+00

WESTON AVENUE

10' MULTI-USE PATH

10' MULTI-USE PATH

STONE RIDGE DRIVE

SEE STONE RIDGE DRIVE PLAN & PROFILE SHEET FOR PAVEMENT MARKING LAYOUT

50+56

5' CONC. SIDEWALK

5' CONC. SIDEWALK

5' CO

25+00

26+00

27+00

28+00

50+00

30+00

31+00

WESTON AVENUE

10' MULTI-USE PATH

10' MULTI-USE PATH

49+45

STATE PROJECT NUMBER: 6999-10-75	HWY: WESTON AVENUE	COUNTY: MARATHON	PAVEMENT MARKING: WESTON AVENUE	SHEET NO: 80	E

P:\DRAFT\32290200 DOT WESTON AVE\PAVEMENT MARKING.dwg, Layout2, 04/01/2004 10:46:40 AM

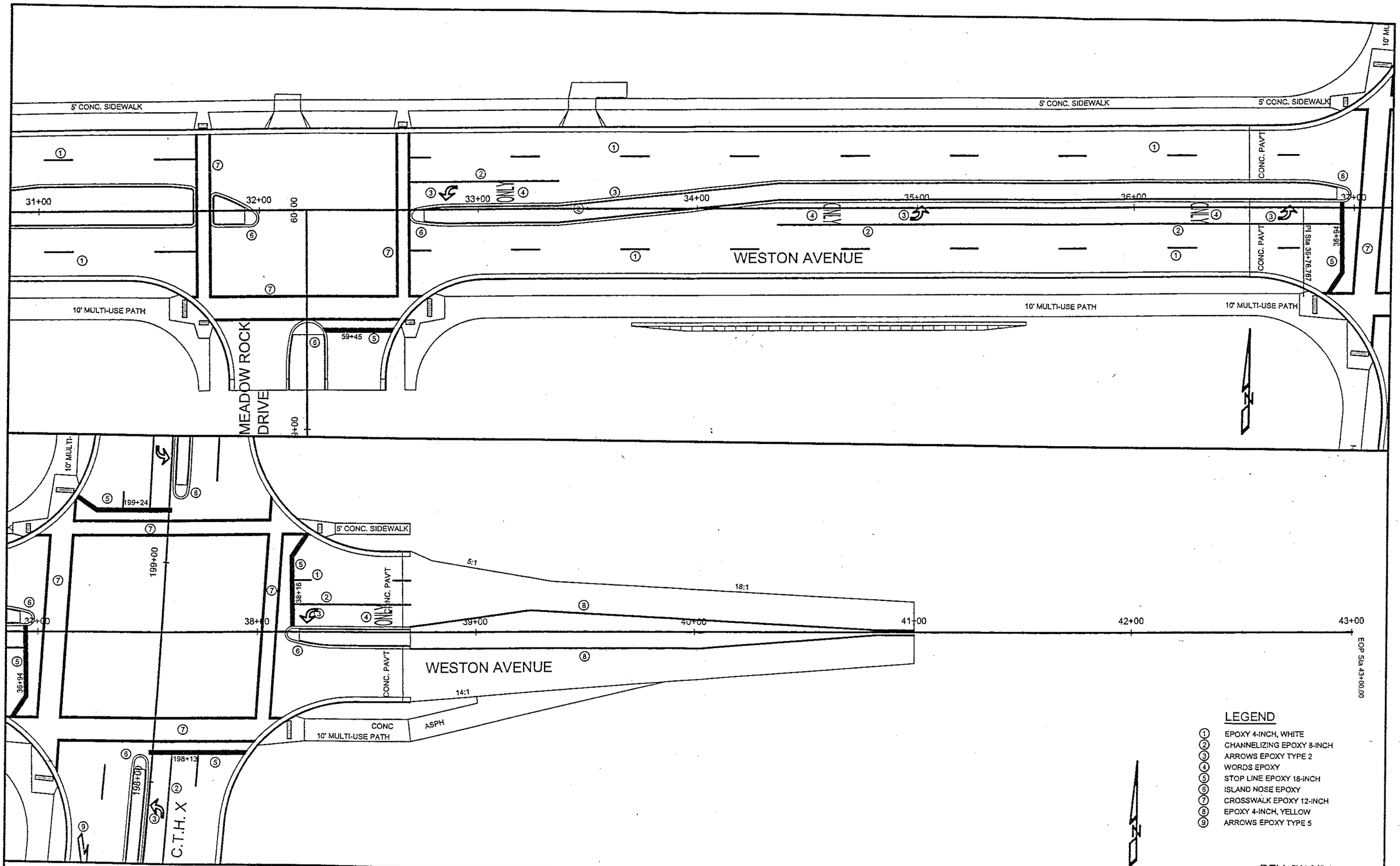

REV. 7/16/04

STATE PROJECT NUMBER: 6999-10-75	HWY: WESTON AVENUE	COUNTY: MARATHON	PAVEMENT MARKING: WESTON AVENUE	SHEET NO: 21

P:\DRAFT\32290200 DOT WESTON AVE\PAVEMENT MARKING.dwg, Layout4, 04/01/2004 10:53:16 AM

LEGEND

1. EPOXY 4-INCH, WHITE
2. CHANNELIZING EPOXY 8-INCH
3. ARROWS EPOXY TYPE 2
4. WORDS EPOXY
5. STOP LINE EPOXY 18-INCH
6. ISLAND NOSE EPOXY
7. CROSSWALK EPOXY 12-INCH
8. EPOXY 4-INCH, YELLOW
9. ARROWS EPOXY TYPE 5
10. DIAGONAL MARKING EPOXY 24-INCH

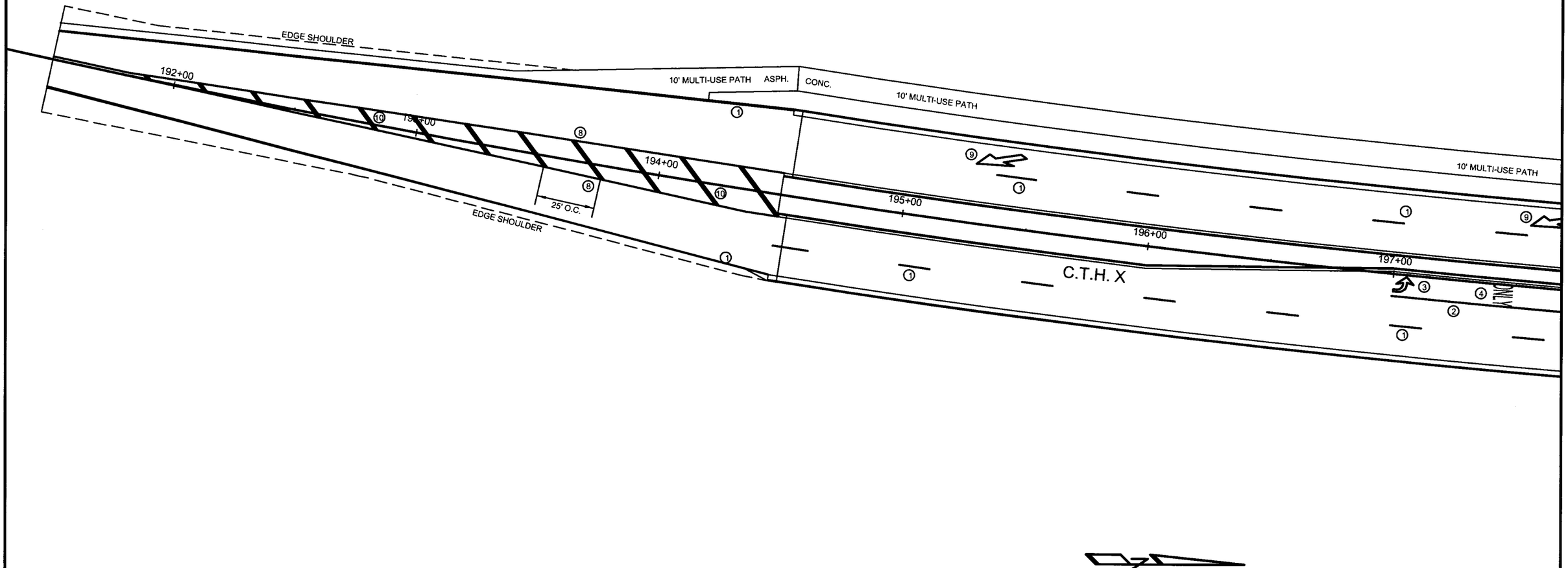

STATE PROJECT NUMBER: 6999-10-75	HWY: WESTON AVENUE	COUNTY: MARATHON	PAVEMENT MARKING: C.T.H. X	SHEET NO: 82	E

P:\DRAFT\32290200 DOT WESTON AVE\PAVEMENT MARKING.dwg, Layout5, 04/01/2004 10:53:10 AM

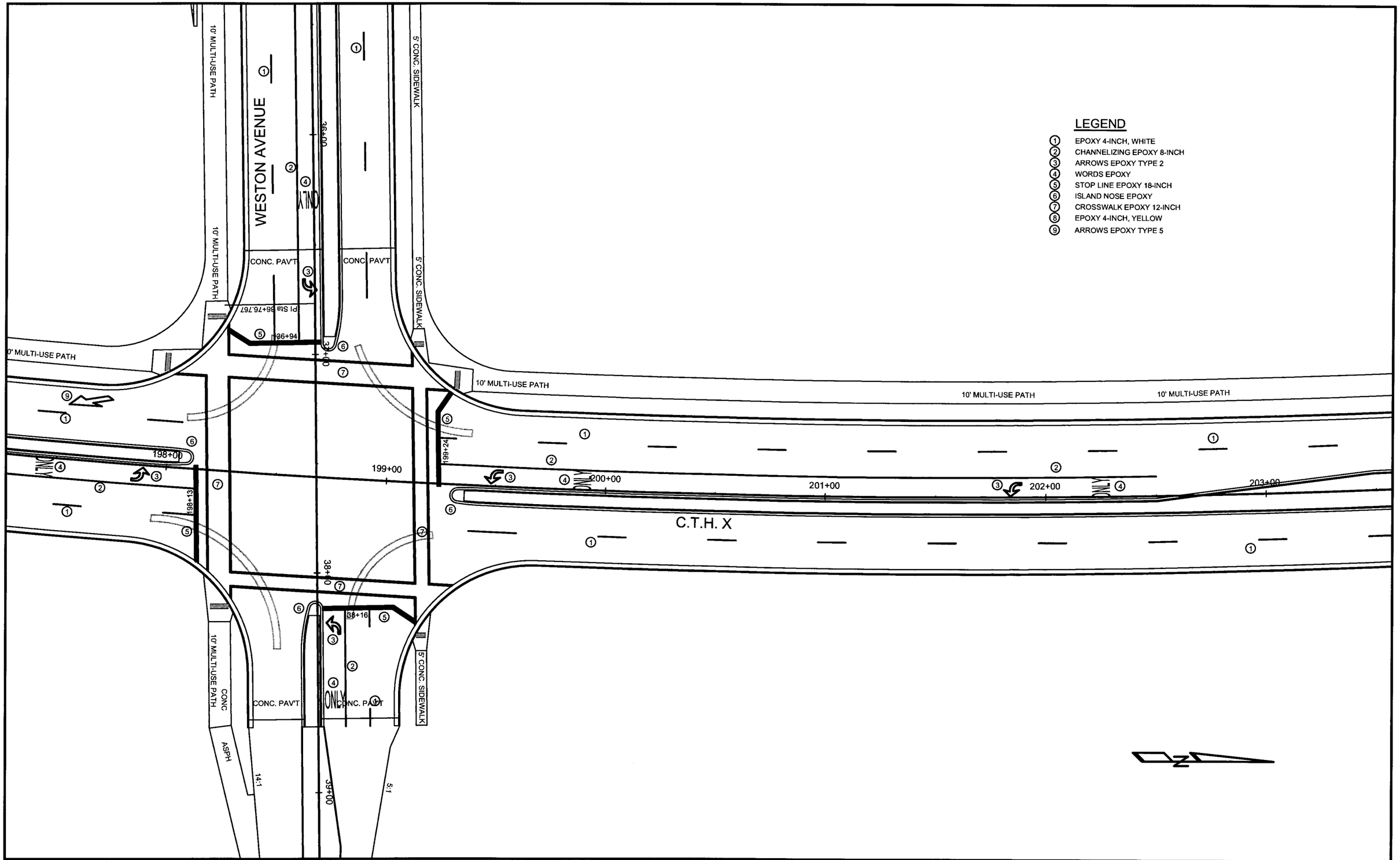

LEGEND

1. EPOXY 4-INCH, WHITE
2. CHANNELIZING EPOXY 8-INCH
3. ARROWS EPOXY TYPE 2
4. WORDS EPOXY
5. STOP LINE EPOXY 18-INCH
6. ISLAND NOSE EPOXY
7. CROSSWALK EPOXY 12-INCH
8. EPOXY 4-INCH, YELLOW
9. ARROWS EPOXY TYPE 5

STATE PROJECT NUMBER: 6999-10-75	HWY: WESTON AVENUE	COUNTY: MARATHON	PAVEMENT MARKING: C.T.H. X	SHEET NO: 83	E

P:\DRAFT\32290200 DOT WESTON AVE\PAVEMENT MARKING.dwg, Layout6, 04/01/2004 10:53:04 AM

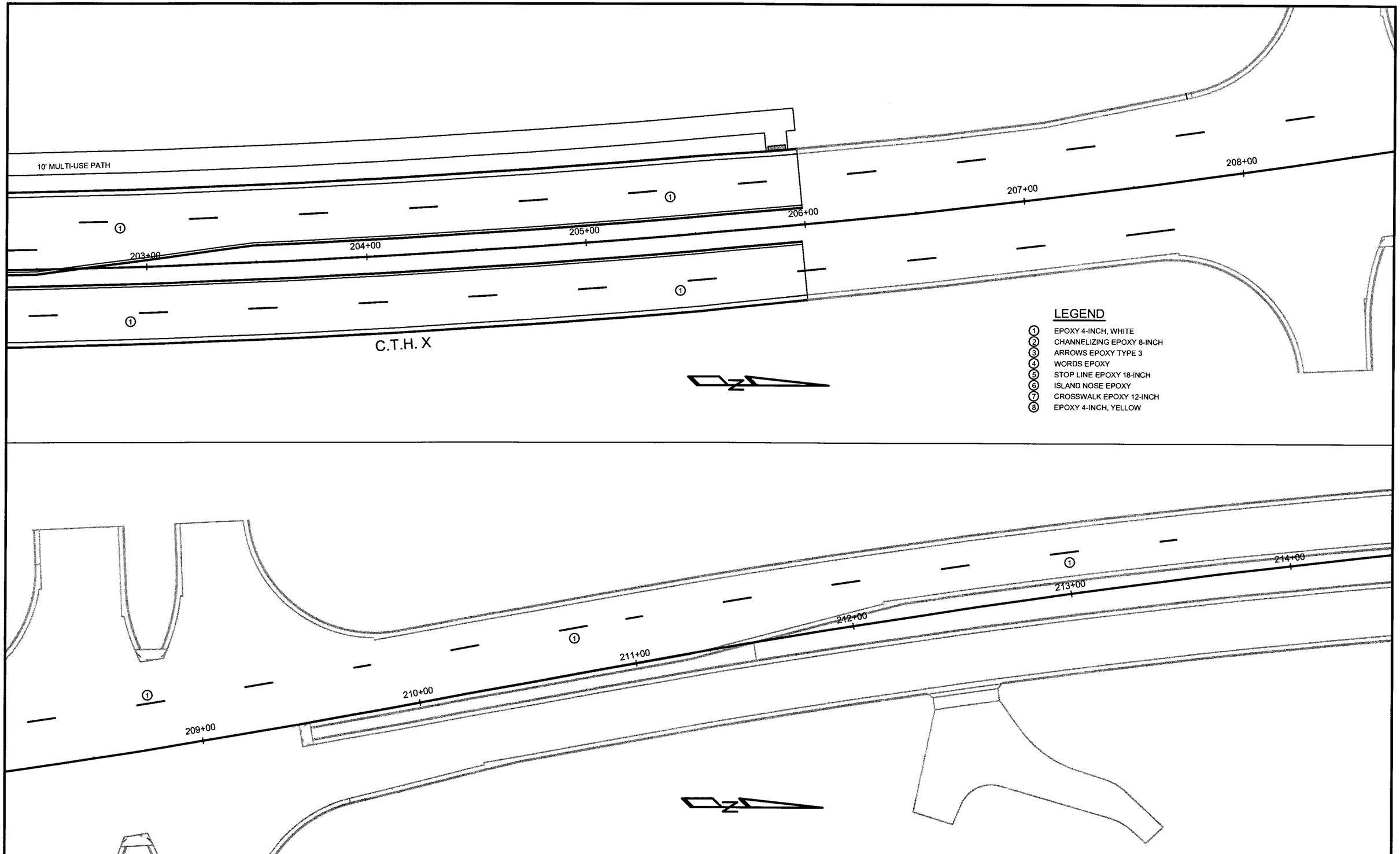

STATE PROJECT NUMBER: 6999-10-75	HWY: WESTON AVENUE	COUNTY: MARATHON	PAVEMENT MARKING: C.T.H. X	SHEET NO: 84 E

S.T.H. 29

S.T.H. 29

BLVD

SAINT CLARE

C.T.H. X

RIDGE DR

STONE

VON KANEL ST

RYAN ST

NOTE:
ALL SIGNAGE EAST OF C.T.H. X
IS FOR STAGE 2 ONLY.

DETAIL C
SHOW "1/4 MILE"
ON R11-3 SIGNS

DETAIL D
WITH "SPECIAL #1" SIGN

DETAIL 3

DETAIL D

WESTON AVE

DETAIL C
(FIRST 3 SIGNS ONLY)
SHOW "1/2 MILE" ON
R11-3 SIGNS

WESTON AVE

DETAIL E

DETAIL 4

DETAIL 4
PLACE SOUTHERNMOST
SIGN AT SHOREY AVENUE

DETAIL C
SHOW "1/4 MILE"
ON R11-3 SIGNS

BIRCH ST

ALDERSON ST

HEEREN ST

DETAIL C
(FIRST 3 SIGNS ONLY)
SHOW "1-1/2 MILE" ON
R11-3 SIGNS

NOTE:
SEE SDD 15C2-4a & b AND 15C3-1 FOR
DETAILS A THRU E AND 1 THRU 4

1 MILE

C.T.H. X

0 1/2 MILE 1 MILE

SHOREY AVE

SHOREY AVE

STATE PROJECT NUMBER: 6999-10-75	HWY: WESTON AVENUE	COUNTY: MARATHON	TRAFFIC CONTROL	SHEET NO: 85	E

P:\DRAFT\32290200 DOT WESTON AVE\BIG TRAFFIC.dwg, Layout1, 04/01/2004 10:42:55 AM

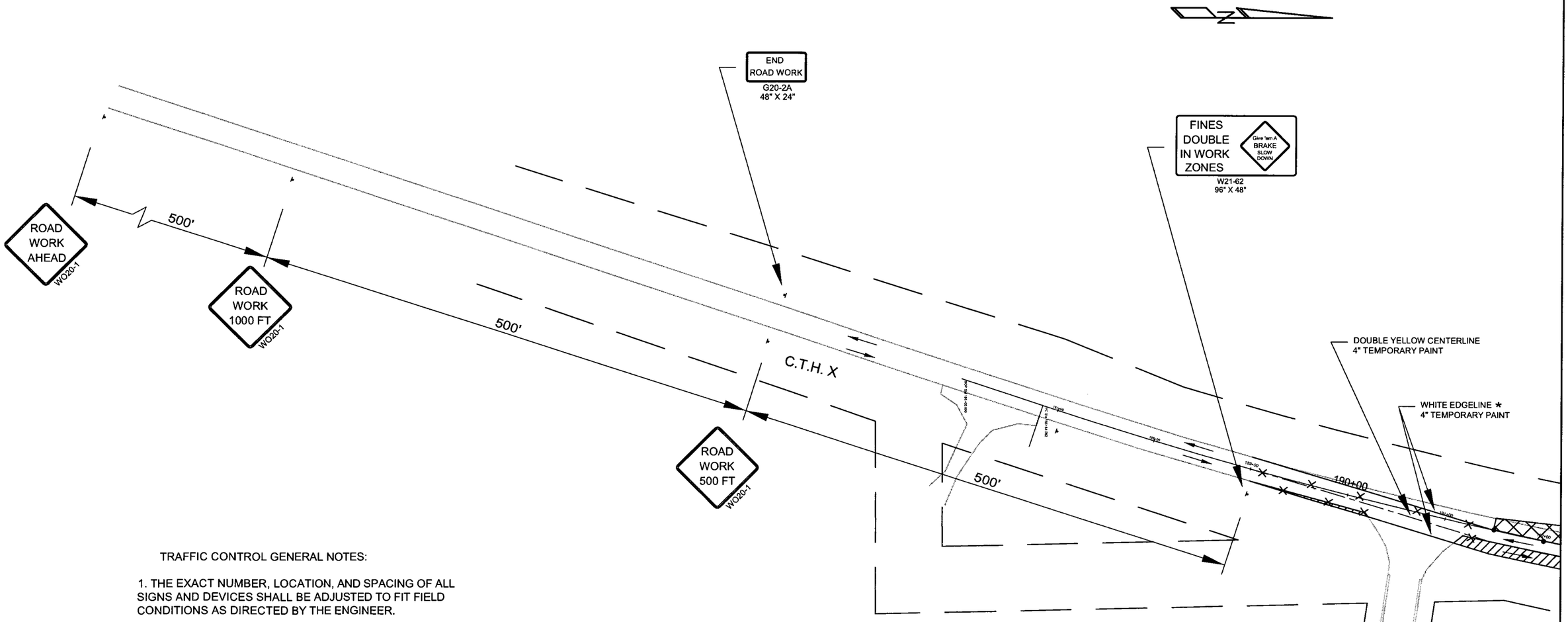

TRAFFIC CONTROL GENERAL NOTES:

1. THE EXACT NUMBER, LOCATION, AND SPACING OF ALL SIGNS AND DEVICES SHALL BE ADJUSTED TO FIT FIELD CONDITIONS AS DIRECTED BY THE ENGINEER.

2. SEE TRAFFIC CONTROL STANDARD DETAIL DRAWINGS FOR FURTHER INFORMATION.

LEGEND

- TRAFFIC CONTROL SIGN WITH POST (48" X 48" UNLESS NOTED)
- TRAFFIC CONTROL BARRICADE
- TRAFFIC CONTROL BARRICADE WITH SIGN
- TRAFFIC CONTROL DRUM
- TRAFFIC CONTROL DRUM WITH TYPE "C" WARNING LIGHT
- TRAFFIC LANE DIRECTION
- X X X X X REMOVING PAVEMENT MARKING
- WORK ZONE
- TEMPORARY WIDENING, ASPHALTIC PAVEMENT, 4-INCH

* = THROUGH INTERSECTION USE DOTTED EDGELINE EXT. MARKING 3' LINE, 12' GAP, 4" TEMP. PAINT

STATE PROJECT NUMBER: 6999-10-75	HWY: WESTON AVENUE	COUNTY: MARATHON	TRAFFIC CONTROL STAGE 1	SHEET NO: 8/6	E

P:\DRAFT\32290200 DOT WESTON AVE\STAGING PLAN.dwg, Layout2, 04/01/2004 10:42:30 AM

P:\DRAFT\32290200 DOT WESTON AVE\STAGING PLAN.dwg, Layout3, 04/01/2004 10:42:23 AM

36" X 36"
R1-1
STOP

36" X 36"
R3-1
EXCEPT AUTHORIZED VEHICLES
36" x 18"
SPECIAL #2

195+00

200+00

205+00

C.T.H. X

DOUBLE YELLOW CENTERLINE
4" TEMPORARY PAINT

WHITE EDGELINE *
4" TEMPORARY PAINT

* = THROUGH INTERSECTION USE
DOTTED EDGELINE EXT. MARKING
3' LINE, 12' GAP, 4" TEMP. PAINT

36" X 36"
R3-2
EXCEPT AUTHORIZED VEHICLES
36" x 18"
SPECIAL #2

WESTON AVENUE

48" X 30"
R11-2
ROAD CLOSED
EXCEPT TO TRAFFIC WITH DESTINATIONS IN CONSTRUCTION AREA
48" x 18"
SPECIAL #1

LEGEND

- TRAFFIC CONTROL SIGN WITH POST
- TRAFFIC CONTROL BARRICADE
- TRAFFIC CONTROL BARRICADE WITH SIGN
- TRAFFIC CONTROL DRUM
- TRAFFIC CONTROL DRUM WITH TYPE "C" WARNING LIGHT
- TRAFFIC LANE DIRECTION
- REMOVING PAVEMENT MARKING
- WORK ZONE
- TEMPORARY WIDENING, ASPHALTIC PAVEMENT, 4-INCH

STATE PROJECT NUMBER: 6999-10-75	HWY: WESTON AVENUE	COUNTY: MARATHON	TRAFFIC CONTROL STAGE 1	SHEET NO: 87	E

P:\DRAFT\32290200 DOT WESTON AVE\STAGING PLAN.dwg, Layout4, 04/01/2004 10:42:16 AM

ACCESS TO:
KEITH'S KAR SALES
R10-61(MOD.)
60" X 30"

MO6-1
21" X 15"

WESTVIEW BLVD

FINES
DOUBLE
IN WORK
ZONES
Give 'em A BRAKE SLOW DOWN
W21-62
96" X 48"

WO4-2L

ROAD
WORK
250 FT
WO20-1

ROAD
WORK
500 FT
WO20-1

ROAD
WORK
AHEAD
WO20-1

S.T.H. 29 (OFF RAMP)

250'

250'

220+00

215+00

210+00

C.T.H. X

150'

250'

S.T.H. 29 (ON RAMP)

LEFT LANE
CLOSED
AHEAD
WO20-5

END
ROAD WORK
G20-2A
48" X 24"

SEE CROSSOVER DETAIL SHEET

LEGEND

- TRAFFIC CONTROL SIGN WITH POST (48" X 48" UNLESS NOTED)
- TRAFFIC CONTROL BARRICADE
- TRAFFIC CONTROL BARRICADE WITH SIGN
- TRAFFIC CONTROL DRUM
- TRAFFIC CONTROL DRUM WITH TYPE "C" WARNING LIGHT
- TRAFFIC LANE DIRECTION
- × × × × × REMOVING PAVEMENT MARKING

STATE PROJECT NUMBER: 6999-10-75	HWY: WESTON AVENUE	COUNTY: MARATHON	TRAFFIC CONTROL STAGE 1	SHEET NO: 88	E

P:\DRAFT\32290200 DOT WESTON AVE\STAGING PLAN.dwg, Layout1, 04/01/2004 10:42:36 AM

WESTVIEW BLVD

C.T.H. X

COVER (EXISTING)

WO1-3L

30 M.P.H. WO13-1 24" X 24"

ACCESS TO: KEITH'S KAR SALES
R10-61(MOD.) 60" X 30"
MO6-1 21" X 15"

DOTTED EDGE LINE EXTENSION MARKING (3' LINE, 12' GAP) 4" TEMPORARY PAINT

YELLOW EDGELINE 4" TEMPORARY PAINT

207+00
208+00
209+00
210+00
211+00
212+00
213+00

PC
PT
R = 500'
56'
51'
72'
71'

PROVIDE MIN. 70' OPENING IN DRUM LINE FOR NORTHBOUND TURNS TO WESTVIEW BLVD

DOUBLE YELLOW CENTERLINE 4" TEMPORARY PAINT

CLOSED
CLOSED

SIGNS ON TYPE 3 BARRICADES

WO1-6 48" X 24" — (A)

R11-2 48" X 30" — ROAD CLOSED — (B)

R11-2 48" X 30" — LANE CLOSED — (C)

LEGEND

- TRAFFIC CONTROL SIGN WITH POST (48" X 48" UNLESS NOTED)
- TRAFFIC CONTROL BARRICADE
- TRAFFIC CONTROL BARRICADE WITH SIGN
- TRAFFIC CONTROL DRUM
- TRAFFIC CONTROL DRUM WITH TYPE "C" WARNING LIGHT
- TRAFFIC LANE DIRECTION
- REMOVING PAVEMENT MARKING

STATE PROJECT NUMBER: 6999-10-75	HWY: WESTON AVENUE	COUNTY: MARATHON	TRAFFIC CONTROL - STAGE 1	SHEET NO: 89	E

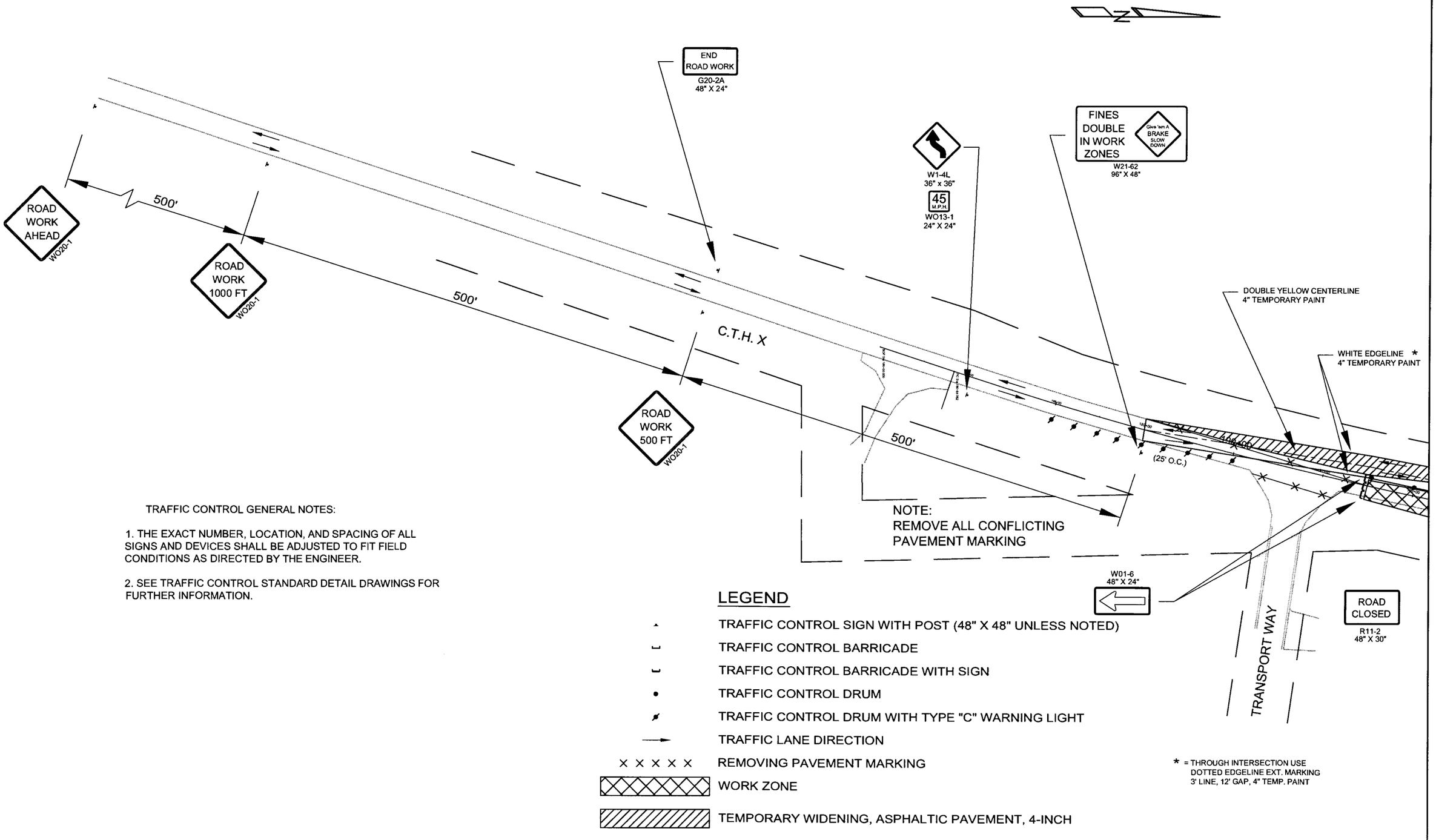

TRAFFIC CONTROL GENERAL NOTES:

1. THE EXACT NUMBER, LOCATION, AND SPACING OF ALL SIGNS AND DEVICES SHALL BE ADJUSTED TO FIT FIELD CONDITIONS AS DIRECTED BY THE ENGINEER.

2. SEE TRAFFIC CONTROL STANDARD DETAIL DRAWINGS FOR FURTHER INFORMATION.

LEGEND

- TRAFFIC CONTROL SIGN WITH POST (48" X 48" UNLESS NOTED)
- TRAFFIC CONTROL BARRICADE
- TRAFFIC CONTROL BARRICADE WITH SIGN
- TRAFFIC CONTROL DRUM
- TRAFFIC CONTROL DRUM WITH TYPE "C" WARNING LIGHT
- TRAFFIC LANE DIRECTION
- X X X X X REMOVING PAVEMENT MARKING
- WORK ZONE
- TEMPORARY WIDENING, ASPHALTIC PAVEMENT, 4-INCH

* = THROUGH INTERSECTION USE DOTTED EDGELINE EXT. MARKING 3' LINE, 12' GAP, 4" TEMP. PAINT

STATE PROJECT NUMBER: 6999-10-75	HWY: WESTON AVENUE	COUNTY: MARATHON	TRAFFIC CONTROL STAGE 2	SHEET NO: 90	E

P:\DRAFT\32290200 DOT WESTON AVE\STAGING PLAN.dwg, Layout2, 04/01/2004 10:41:44 AM

P:\DRAFT\32290200 DOT WESTON AVE\STAGING PLAN.dwg, Layout3, 04/01/2004 10:41:51 AM

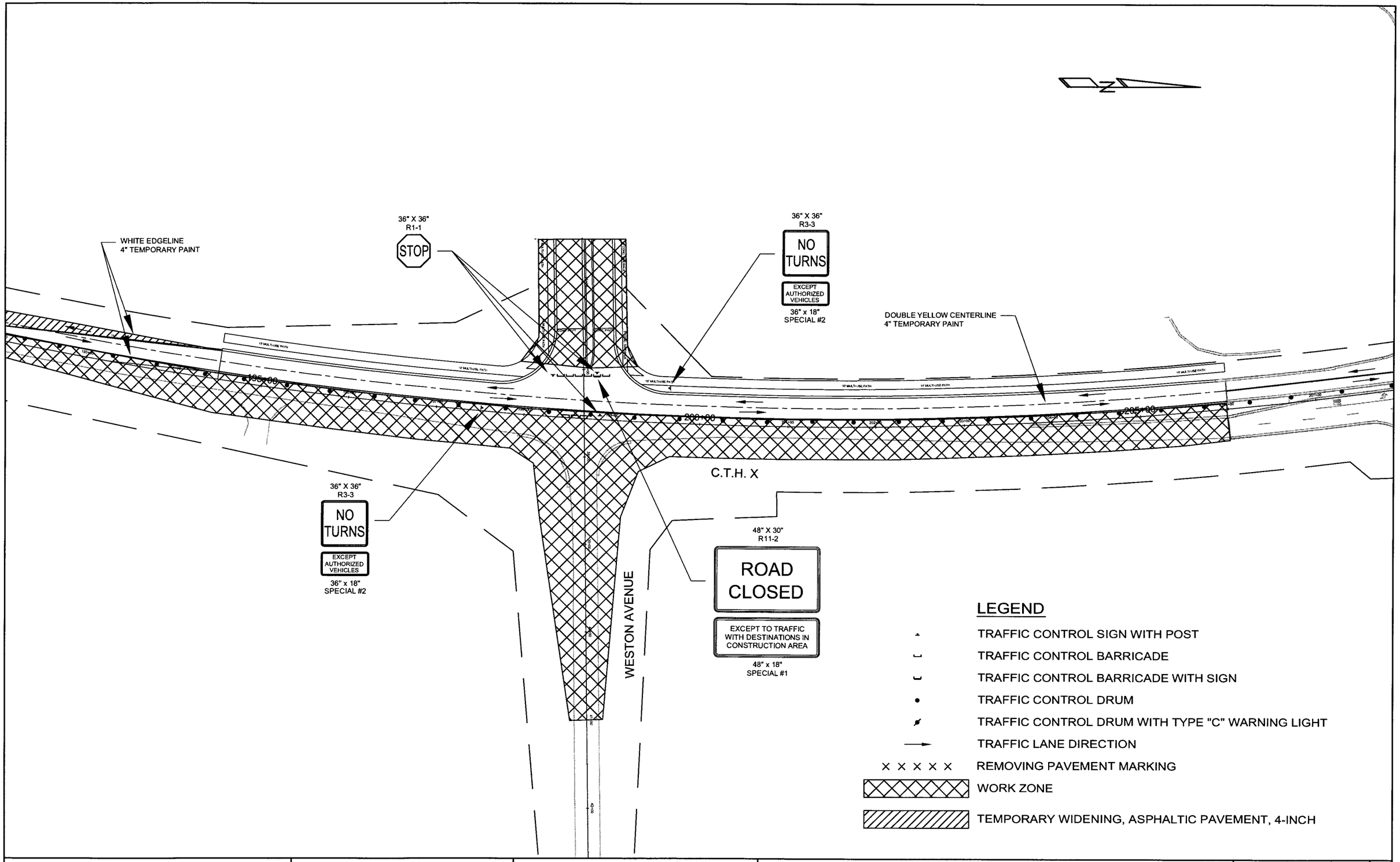

STATE PROJECT NUMBER: 6999-10-75	HWY: WESTON AVENUE	COUNTY: MARATHON	TRAFFIC CONTROL STAGE 2	SHEET NO: 91	E

P:\DRAFT\32290200 DOT WESTON AVE\STAGING PLAN.dwg, Layout4, 04/01/2004 10:41:58 AM

WESTVIEW BLVD

ACCESS TO:
KEITH'S KAR SALES
R10-61(MOD.)
60" X 30"
M06-1
21" X 15"

FINES DOUBLE IN WORK ZONES
Give 'em A BRAKE SLOW DOWN
W21-62
96" X 48"

W04-2L

ROAD WORK 250 FT
W020-1

ROAD WORK 500 FT
W020-1

ROAD WORK AHEAD
W020-1

S.T.H. 29 (OFF RAMP)

250'

250'

220+00

215+00

210+00

C.T.H. X

150'

250'

S.T.H. 29 (ON RAMP)

LEFT LANE CLOSED AHEAD
W020-5

SEE CROSSOVER DETAIL SHEET

END ROAD WORK
G20-2A
48" X 24"

LEGEND

- TRAFFIC CONTROL SIGN WITH POST (48" X 48" UNLESS NOTED)
- TRAFFIC CONTROL BARRICADE
- TRAFFIC CONTROL BARRICADE WITH SIGN
- TRAFFIC CONTROL DRUM
- TRAFFIC CONTROL DRUM WITH TYPE "C" WARNING LIGHT
- TRAFFIC LANE DIRECTION
- × × × × × REMOVING PAVEMENT MARKING

STATE PROJECT NUMBER: 6999-10-75	HWY: WESTON AVENUE	COUNTY: MARATHON	TRAFFIC CONTROL STAGE 2	SHEET NO: 92	E

P:\DRAFT\32290200 DOT WESTON AVE\STAGING PLAN.dwg, Layout1, 04/01/2004 10:41:34 AM

WESTVIEW BLVD

C.T.H. X

PROVIDE MIN. 70' OPENING IN DRUM LINE FOR NORTHBOUND TURNS TO WESTVIEW BLVD

ACCESS TO: KEITH'S KAR SALES
R10-61(MOD.)
60" X 30"
MO6-1
21" X 15"

DOUBLE YELLOW CENTERLINE
4" TEMPORARY PAINT

YELLOW EDGELINE
4" TEMPORARY PAINT

207+00
208+00
209+00
210+00
211+00
212+00
213+00

PC
PT
R = 300'
41'
48'
12'

CLOSED
CLOSED

DOTTED EDGE LINE EXTENSION MARKING
(3' LINE, 12' GAP) 4" TEMPORARY PAINT

WO1-3R

25 M.P.H.
WO13-1
24" X 24"

NOTE:
REMOVE ALL TEMPORARY PAVEMENT MARKINGS FROM PHASE 1 NOT NEEDED IN PHASE 2.

SIGNS ON TYPE 3 BARRICADES

WO1-6
48" X 24" (A)

R11-2
48" X 30"
ROAD CLOSED (B)

R11-2
48" X 30"
LANE CLOSED (C)

LEGEND

- TRAFFIC CONTROL SIGN WITH POST (48" X 48" UNLESS NOTED)
- TRAFFIC CONTROL BARRICADE
- TRAFFIC CONTROL BARRICADE WITH SIGN
- TRAFFIC CONTROL DRUM
- TRAFFIC CONTROL DRUM WITH TYPE "C" WARNING LIGHT
- TRAFFIC LANE DIRECTION
- X X X X X REMOVING PAVEMENT MARKING

STATE PROJECT NUMBER: 6999-10-75	HWY: WESTON AVENUE	COUNTY: MARATHON	TRAFFIC CONTROL - STAGE 2	SHEET NO: 93	E

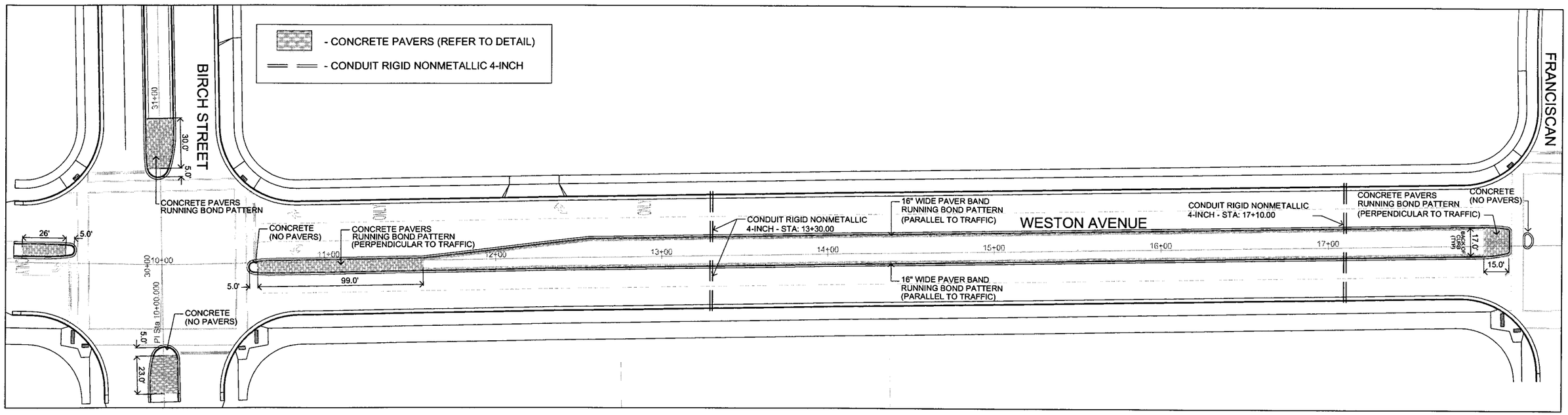

MEDIAN BETWEEN BIRCH STREET & FRANCISCAN WAY

0 15' 30' 60'

NORTH

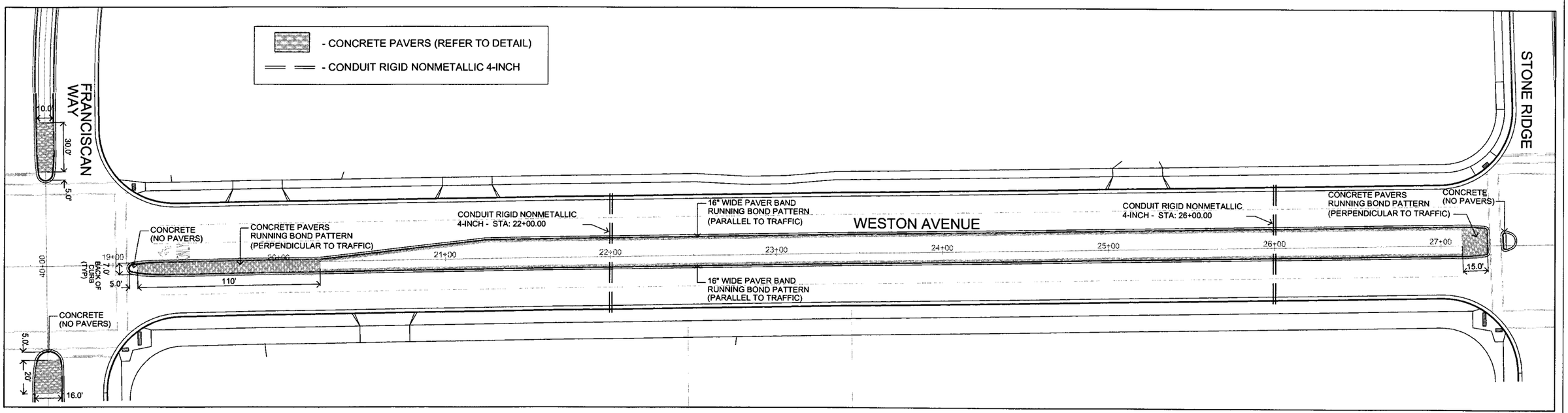

MEDIAN BETWEEN FRANCISCAN WAY & STONE RIDGE DRIVE

0 15' 30' 60'

NORTH

STATE PROJECT NUMBER: 6999-10-05	HWY: WESTON AVENUE	COUNTY: MARATHON	CONCRETE PAVER PLAN	SHEET NO: 94	E

P:\DRAFT\32290200.DOT.WESTON.AVE\D.FARBER\03-204-L1.dwg, Layout1, 4/2/2004 10:58:49 AM

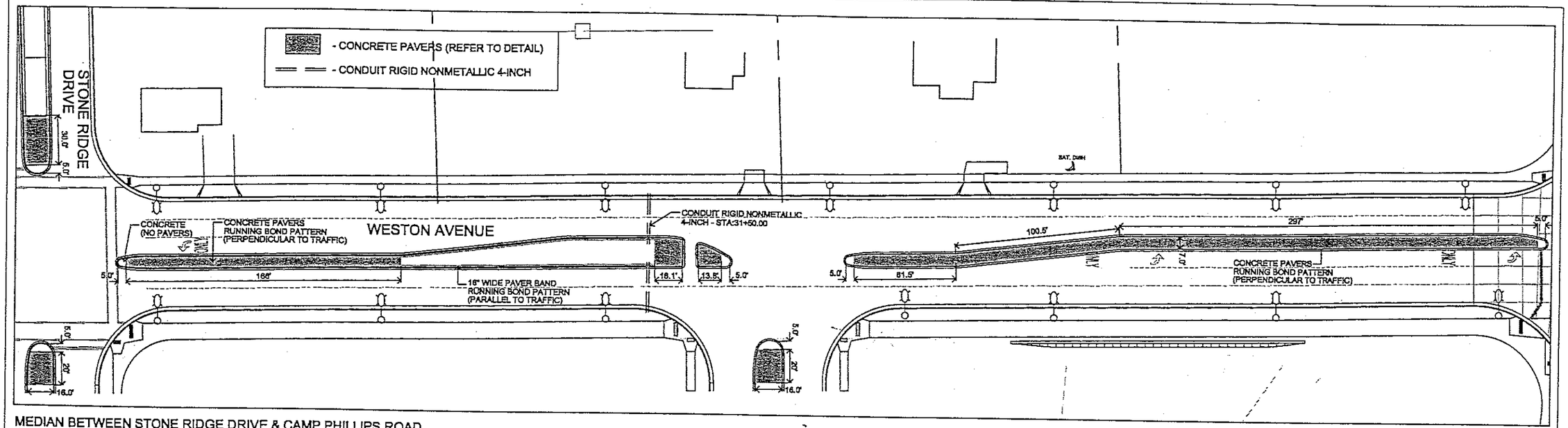

MEDIAN BETWEEN STONE RIDGE DRIVE & CAMP PHILLIPS ROAD

0 15' 30' 60'

NORTH

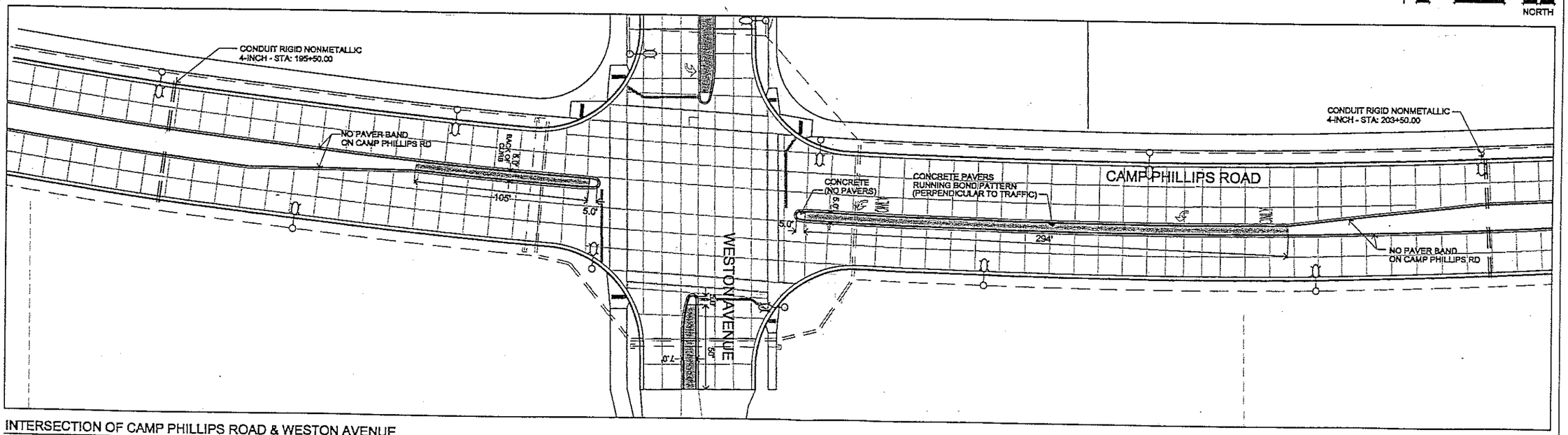

INTERSECTION OF CAMP PHILLIPS ROAD & WESTON AVENUE

0 15' 30' 60'

NORTH

REV. 7/16/04

STATE PROJECT NUMBER: 6999-10-05	HWY: WESTON AVENUE	COUNTY: MARATHON	CONCRETE PAVER PLAN	SHEET NO: 95	E

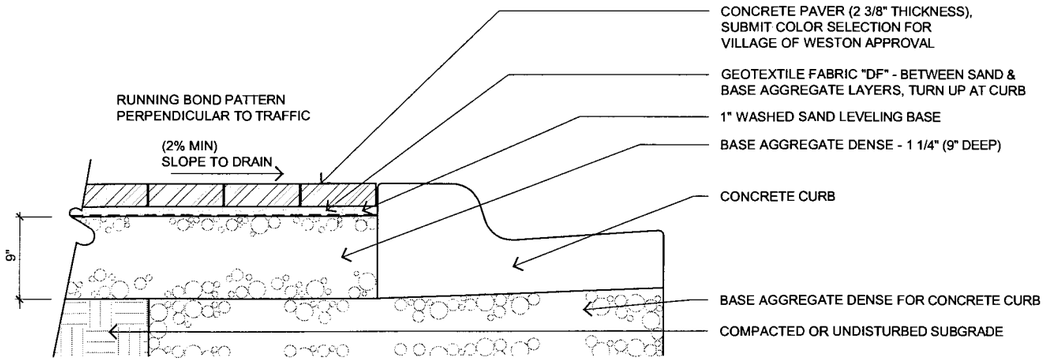

A CONCRETE PAVER AT CURB

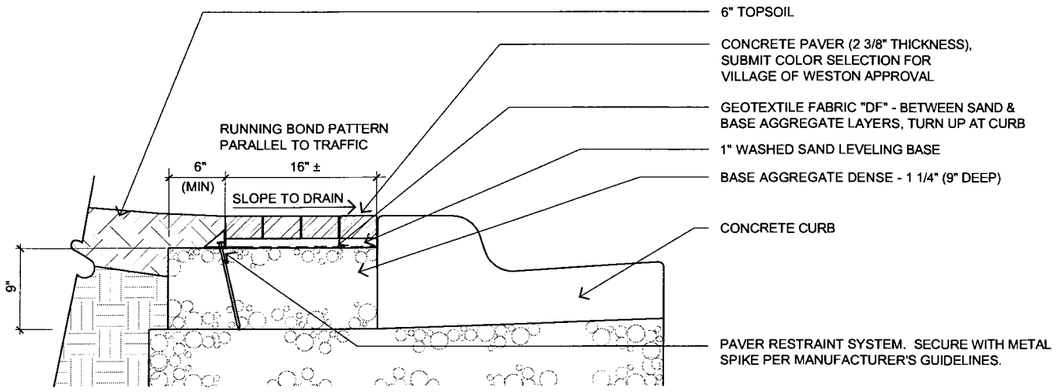

B 16" CONCRETE PAVER BAND

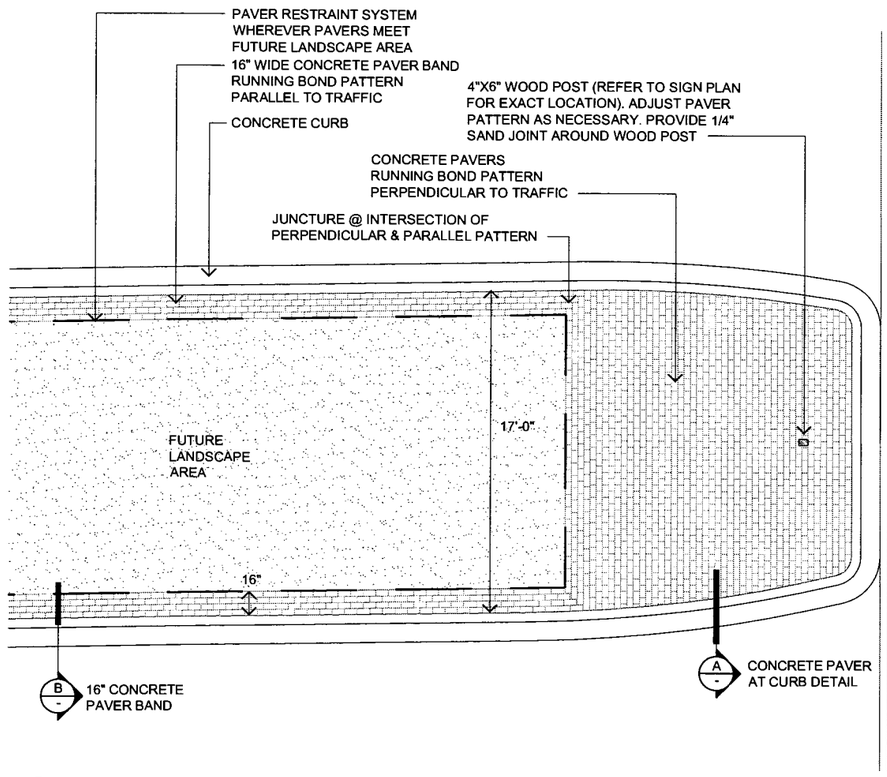

C ENLARGEMENT PLAN - CONCRETE PAVERS AT MEDIAN NOSE (TYPICAL)

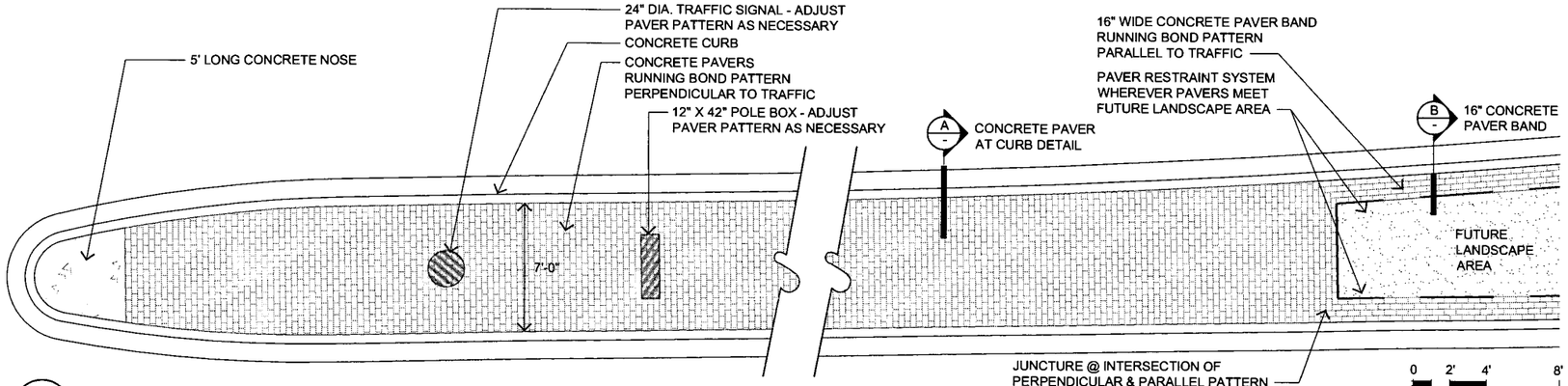

D ENLARGEMENT PLAN - CONCRETE PAVERS AT MEDIAN NOSE (TYPICAL)

CONCRETE PAVERS NOTES

1. PAVER SIZE = HOLLAND (6CM) 3-7/8" X 7-7/8" X 2-3/8" (TYP)
2. PAVER COLOR = "RED/BROWN BLEND"
3. PAVER PATTERN = RUNNING BOND
4. JOINT BETWEEN PAVERS SHALL BE AN AVERAGE BETWEEN 1/16" TO 3/16". NOT
5. TO EXCEED 1/4" WIDE. INSTALL PERIMETER RETAINAGE EDGING AS PER MANUFACTURERS INSTRUCTIONS & RECOMMENDATIONS.

P:\DRAFT\32290200.DOT.WESTON.AVE\D.FARBER\03-204-L3.dwg, Layout1, 4/2/2004 11:00:41 AM

STATE PROJECT NUMBER: 6999-10-05	HWY: WESTON AVENUE	COUNTY: MARATHON	CONCRETE PAVER DETAILS	SHEET NO: 96	E

DATE 07APR04

E S T I M A T E O F Q U A N T I T I E S

LINE NUMBER	ITEM	ITEM DESCRIPTION	UNIT	TOTAL	6999-10-75 QUANTITY
0010	108.4300	RBC PROGRESS SCHEDULE	EACH	1.000	1.000
0020	201.0115	CLEARING	ACRE	0.100	0.100
0030	201.0120	CLEARING	ID	839.000	839.000
0040	201.0215	GRUBBING	ACRE	0.790	0.790
0050	201.0220	GRUBBING	ID	490.000	490.000
0060	203.0100	REMOVING SMALL PIPE CULVERTS	EACH	15.000	15.000
0070	204.0150	REMOVING CURB & GUTTER	LF	715.000	715.000
0080	204.0155	REMOVING CONCRETE SIDEWALK	SY	5.550	5.550
0090	204.0170	REMOVING FENCE	LF	388.000	388.000
0100	204.0205	REMOVING UTILITY POLES	EACH	3.000	3.000
0110	204.0230	REMOVING BUILDING (STATION) 01. 11+84, RT	LS	1.000	1.000
0120	204.0250	ABANDONING MANHOLES	EACH	1.000	1.000
0130	204.0260	ABANDONING INLETS	EACH	2.000	2.000
0140	204.0270	ABANDONING CULVERT PIPES	EACH	3.000	3.000
0150	205.0100	EXCAVATION COMMON	CY	34,945.000	34,945.000
0160	206.3000	EXCAVATION FOR STRUCTURES RETAINING WALLS (STRUCTURE) 01. R-37-034	LS	1.000	1.000
0170	301.0100.S	QMP BASE AGGREGATE	TON	30,751.000	30,751.000
0180	305.0120	BASE AGGREGATE DENSE 1 1/4-INCH	TON	30,751.000	30,751.000
0190	311.0110	BREAKER RUN	TON	34,543.000	34,543.000
0200	415.0090	CONCRETE PAVEMENT 9-INCH	SY	8,285.800	8,285.800
0210	416.0160	CONCRETE DRIVEWAY 6-INCH	SY	278.100	278.100
0220	455.0115	ASPHALTIC MATERIAL PG64-22	TON	190.000	190.000
0230	455.0120	ASPHALTIC MATERIAL PG64-28	TON	152.000	152.000
0240	455.0605	TACK COAT	GAL	611.400	611.400
0250	460.1103	HMA PAVEMENT TYPE E-3	TON	6,339.000	6,339.000
0260	460.2000	INCENTIVE DENSITY HMA PAVEMENT	DOL	4,060.000	4,060.000
0270	460.3000	QMP HMA MIXTURE	TON	6,339.000	6,339.000
0280	465.0120	ASPHALTIC SURFACE DRIVEWAYS AND FIELD ENTRANCES	TON	24.000	24.000
0290	465.0125	ASPHALTIC SURFACE TEMPORARY	TON	309.200	309.200
0300	513.4080	RAILING TUBULAR SPECIAL (STRUCTURE) 01. R-37-034	LS	1.000	1.000
0310	522.1012	APRON ENDWALLS FOR CULVERT PIPE REINFORCED CONCRETE 12-INCH	EACH	2.000	2.000
0320	522.1036	APRON ENDWALLS FOR CULVERT PIPE REINFORCED CONCRETE 36-INCH	EACH	1.000	1.000
0330	522.1042	APRON ENDWALLS FOR CULVERT PIPE REINFORCED CONCRETE 42-INCH	EACH	1.000	1.000
0340	523.0129	CULVERT PIPE REINFORCED CONCRETE HORIZONTAL ELLIPTICAL CLASS HE-III 29X45-INCH	LF	126.000	126.000
0350	523.0529	APRON ENDWALLS FOR CULVERT PIPE REINFORCED CONCRETE HORIZONTAL ELLIPTICAL 29X45-INCH	EACH	1.000	1.000
0360	524.0624	APRON ENDWALLS FOR CULVERT PIPE SALVAGED 24-INCH	EACH	1.000	1.000
0370	532.0300.S	WALL MODULAR BLOCK MECHANICALLY STABILIZED EARTH	SF	1,685.000	1,685.000
0380	601.0405	CONCRETE CURB & GUTTER 18-INCH TYPE A	LF	2,219.000	2,219.000
0390	601.0407	CONCRETE CURB & GUTTER 18-INCH TYPE D	LF	5,493.000	5,493.000
0400	601.0409	CONCRETE CURB & GUTTER 30-INCH TYPE A	LF	2,348.000	2,348.000
0410	601.0411	CONCRETE CURB & GUTTER 30-INCH TYPE D	LF	5,412.000	5,412.000
0420	602.0405	CONCRETE SIDEWALK 4-INCH	SF	52,745.000	52,745.000
0430	602.0415	CONCRETE SIDEWALK 6-INCH	SF	1,563.000	1,563.000

97

DATE 07APR04

E S T I M A T E O F Q U A N T I T I E S

LINE NUMBER	ITEM	ITEM DESCRIPTION	UNIT	TOTAL	6999-10-75 QUANTITY
0440	602.0501.S	CURB RAMP DETECTABLE WARNING FIELD	SF	288.000	288.000
0450	606.0300	RIPRAP HEAVY	CY	370.000	370.000
0460	607.0600.S	STORM SEWER PIPE (INCH) 01. 42-INCH CORRUGATED POLYETHYLENE	LF	392.000	392.000
0470	608.0312	STORM SEWER PIPE REINFORCED CONCRETE CLASS III 12-INCH	LF	1,134.000	1,134.000
0480	608.0315	STORM SEWER PIPE REINFORCED CONCRETE CLASS III 15-INCH	LF	443.500	443.500
0490	608.0318	STORM SEWER PIPE REINFORCED CONCRETE CLASS III 18-INCH	LF	132.000	132.000
0500	608.0324	STORM SEWER PIPE REINFORCED CONCRETE CLASS III 24-INCH	LF	895.000	895.000
0510	608.0330	STORM SEWER PIPE REINFORCED CONCRETE CLASS III 30-INCH	LF	678.000	678.000
0520	608.0336	STORM SEWER PIPE REINFORCED CONCRETE CLASS III 36-INCH	LF	293.000	293.000
0530	608.0342	STORM SEWER PIPE REINFORCED CONCRETE CLASS III 42-INCH	LF	182.000	182.000
0540	611.0103	CATCH BASINS TYPE 2	EACH	66.000	66.000
0550	611.0201	MANHOLES TYPE 1	EACH	3.000	3.000
0560	611.0210	MANHOLES TYPE 3	EACH	11.000	11.000
0570	611.0420	RECONSTRUCTING MANHOLES	EACH	8.000	8.000
0580	611.0530	MANHOLE COVERS TYPE J	EACH	13.000	13.000
0590	611.0612	INLET COVERS TYPE C	EACH	4.000	4.000
0600	611.0624	INLET COVERS TYPE H	EACH	64.000	64.000
0610	611.8110	ADJUSTING MANHOLE COVERS	EACH	18.000	18.000
0620	611.9800.S	PIPE GRATES	EACH	2.000	2.000
0630	612.0406	PIPE UNDERDRAIN WRAPPED 6-INCH	LF	15,900.000	15,900.000
0640	612.0902.S	INSULATION BOARD POLYSTYRENE (INCH) 01. 3-INCH	SY	33.820	33.820
0650	614.0620.S	MARKER POSTS CULVERT END FLEXIBLE	EACH	5.000	5.000
0660	619.1000	MOBILIZATION	EACH	1.000	1.000
0670	620.0300	CONCRETE MEDIAN SLOPED NOSE	SF	901.300	901.300
0680	621.1100	LANDMARK REFERENCE MONUMENTS AND CAST IRON COVERS	EACH	2.000	2.000
0690	624.0100	WATER	MGAL	426.680	426.680
0700	625.0100	TOPSOIL	SY	12,429.000	12,429.000
0710	625.0500	SALVAGED TOPSOIL	SY	9,941.000	9,941.000
0720	627.0200	MULCHING	SY	22,370.000	22,370.000
0730	628.1505	SILT FENCE DELIVERED	LF	4,635.000	4,635.000
0740	628.1510	SILT FENCE INSTALLED	LF	4,635.000	4,635.000
0750	628.1520	SILT FENCE MAINTENANCE	LF	4,635.000	4,635.000
0760	628.1905	MOBILIZATIONS EROSION CONTROL	EACH	2.000	2.000
0770	628.1910	MOBILIZATIONS EMERGENCY EROSION CONTROL	EACH	1.000	1.000
0780	628.2005	EROSION MAT DELIVERED CLASS I TYPE A	SY	528.000	528.000
0790	628.3005	EROSION MAT INSTALLED CLASS I TYPE A	SY	528.000	528.000
0800	628.7005	INLET PROTECTION TYPE A	EACH	70.000	70.000
0810	628.7010	INLET PROTECTION TYPE B	EACH	2.000	2.000
0820	628.7015	INLET PROTECTION TYPE C	EACH	46.000	46.000
0830	628.7020	INLET PROTECTION TYPE D	EACH	20.000	20.000
0840	629.0210	FERTILIZER TYPE B	CWT	7.500	7.500
0850	630.0110	SEEDING MIXTURE NO. 10	LB	134.200	134.200
0860	630.0140	SEEDING MIXTURE NO. 40	LB	447.400	447.400
0870	630.0200	SEEDING TEMPORARY	LB	167.800	167.800
0880	634.0616	POSTS WOOD 4X6-INCH X 16-FT	EACH	28.000	28.000

98

DATE 07APR04

E S T I M A T E O F Q U A N T I T I E S

LINE NUMBER	ITEM	ITEM DESCRIPTION	UNIT	TOTAL	6999-10-75 QUANTITY
0890	634.0618	POSTS WOOD 4X6-INCH X 18-FT	EACH	6.000	6.000
0900	637.0202	SIGNS REFLECTIVE TYPE II	SF	435.260	435.260
0910	638.2602	REMOVING SIGNS TYPE II	EACH	23.000	23.000
0920	638.3000	REMOVING SMALL SIGN SUPPORTS	EACH	23.000	23.000
0930	642.5000	FIELD OFFICE TYPE B (PROJECT) 6999-10-75	EACH	1.000	1.000
0940	643.0100	TRAFFIC CONTROL (PROJECT) 6999-10-75	EACH	1.000	1.000
0950	643.0300	TRAFFIC CONTROL DRUMS	DAYS	10,716.000	10,716.000
0960	643.0420	TRAFFIC CONTROL BARRICADES TYPE III	DAYS	6,612.000	6,612.000
0970	643.0705	TRAFFIC CONTROL WARNING LIGHTS TYPE A	DAYS	6,840.000	6,840.000
0980	643.0715	TRAFFIC CONTROL WARNING LIGHTS TYPE C	DAYS	3,268.000	3,268.000
0990	643.0900	TRAFFIC CONTROL SIGNS	DAYS	8,816.000	8,816.000
1000	643.1000	TRAFFIC CONTROL SIGNS FIXED MESSAGE	SF	46.000	46.000
1010	645.0120	GEOTEXTILE FABRIC TYPE HR	SY	246.700	246.700
1020	645.0140	GEOTEXTILE FABRIC TYPE SAS	SY	38,862.000	38,862.000
1030	646.0106	PAVEMENT MARKING EPOXY 4-INCH	LF	4,169.000	4,169.000
1040	646.0226	PAVEMENT MARKING CHANNELIZING EPOXY 8-INCH	LF	1,311.000	1,311.000
1050	646.0600	REMOVING PAVEMENT MARKINGS	LF	4,031.000	4,031.000
1060	647.0166	PAVEMENT MARKING ARROWS EPOXY TYPE 2	EACH	13.000	13.000
1070	647.0196	PAVEMENT MARKING ARROWS EPOXY TYPE 5	EACH	2.000	2.000
1080	647.0356	PAVEMENT MARKING WORDS EPOXY	EACH	12.000	12.000
1090	647.0566	PAVEMENT MARKING STOP LINE EPOXY 18-INCH	LF	442.000	442.000
1100	647.0606	PAVEMENT MARKING ISLAND NOSE EPOXY	EACH	16.000	16.000
1110	647.0746	PAVEMENT MARKING DIAGONAL EPOXY 24-INCH	LF	230.000	230.000
1120	647.0776	PAVEMENT MARKING CROSSWALK EPOXY 12-INCH	LF	2,838.000	2,838.000
1130	649.0200	TEMPORARY PAVEMENT MARKING REFLECTIVE PAINT 4-INCH	LF	14,127.000	14,127.000
1140	651.3050.S	TRAFFIC SIGNAL CONTROLLER FULLY ACTUATED 8-PHASE	EACH	1.000	1.000
1150	652.0225	CONDUIT RIGID NONMETALLIC SCHEDULE 40 2-INCH	LF	12,454.000	12,454.000
1160	652.0235	CONDUIT RIGID NONMETALLIC SCHEDULE 40 3-INCH	LF	5,703.000	5,703.000
1170	652.0340	CONDUIT RIGID NONMETALLIC SCHEDULE 80 4-INCH	LF	420.000	420.000
1180	652.0800	CONDUIT LOOP DETECTOR	LF	3,100.000	3,100.000
1190	653.0135	PULL BOXES STEEL 24X36-INCH	EACH	56.000	56.000
1200	653.0140	PULL BOXES STEEL 24X42-INCH	EACH	51.000	51.000
1210	653.0145	PULL BOXES STEEL 24X48-INCH	EACH	1.000	1.000
1220	654.0101	CONCRETE BASES TYPE 1	EACH	8.000	8.000
1230	654.0102	CONCRETE BASES TYPE 2	EACH	16.000	16.000
1240	654.0106	CONCRETE BASES TYPE 6	EACH	42.000	42.000
1250	654.0215	CONCRETE CONTROL CABINET BASES TYPE 9	EACH	1.000	1.000
1260	654.0217	CONCRETE CONTROL CABINET BASES TYPE 9 SPECIAL	EACH	2.000	2.000
1270	655.0205	CABLE TRAFFIC SIGNAL 3-12 AWG	LF	675.000	675.000
1280	655.0260	CABLE TRAFFIC SIGNAL 12-14 AWG	LF	1,970.000	1,970.000
1290	655.0410	COMMUNICATION CABLE INSTALLED IN CONDUIT	LF	3,500.000	3,500.000
1300	655.0515	ELECTRICAL WIRE TRAFFIC SIGNALS 10 AWG	LF	1,245.000	1,245.000
1310	655.0610	ELECTRICAL WIRE LIGHTING 12 AWG	LF	6,750.000	6,750.000
1320	655.0625	ELECTRICAL WIRE LIGHTING 6 AWG	LF	17,178.000	17,178.000
1330	655.0630	ELECTRICAL WIRE LIGHTING 4 AWG	LF	16,045.000	16,045.000
1340	655.0635	ELECTRICAL WIRE LIGHTING 2 AWG	LF	14,592.000	14,592.000
1350	655.0700	LOOP DETECTOR LEAD IN CABLE	LF	3,790.000	3,790.000

99

DATE 07APR04

ESTIMATE OF QUANTITIES

LINE NUMBER	ITEM	ITEM DESCRIPTION	UNIT	TOTAL	6999-10-75 QUANTITY
1360	655.0800	LOOP DETECTOR WIRE	LF	4,700.000	4,700.000
1370	656.0200	ELECTRICAL SERVICE METER BREAKER PEDESTAL (LOCATION) 01. CTH X & WESTON AVE.	LS	1.000	1.000
1380	657.0100	PEDESTAL BASES	EACH	4.000	4.000
1390	657.0255	TRANSFORMER BASES STANDARD 11 1/2-INCH BOLT CIRCLE	EACH	62.000	62.000
1400	657.0315	POLES TYPE 4	EACH	4.000	4.000
1410	657.0325	POLES TYPE 6	EACH	14.000	14.000
1420	657.0395.S	POLES (TYPE) 01. 2	EACH	4.000	4.000
1430	657.0425	TRAFFIC SIGNAL STANDARDS ALUMINUM 15-FT	EACH	4.000	4.000
1440	657.0595.S	TROMBONE ARMS (LENGTH) 01. 15-FT	EACH	4.000	4.000
1450	657.0610	LUMINAIRE ARMS SINGLE MEMBER 4 1/2-INCH CLAMP 6-FT	EACH	58.000	58.000
1460	658.0110	TRAFFIC SIGNAL FACE 3-12 INCH VERTICAL	EACH	12.000	12.000
1470	658.0155	TRAFFIC SIGNAL FACE 3-12 INCH HORIZONTAL	EACH	4.000	4.000
1480	658.0215	BACKPLATES SIGNAL FACE 3 SECTION 12-INCH	EACH	16.000	16.000
1490	658.0412	PEDESTRIAN SIGNAL FACE 12-INCH	EACH	8.000	8.000
1500	658.0500	PEDESTRIAN PUSH BUTTONS	EACH	8.000	8.000
1510	658.5069	SIGNAL MOUNTING HARDWARE (LOCATION) 01. CTH X & WESTON AVE.	LS	1.000	1.000
1520	690.0100	SAWING EXISTING PAVEMENT	LF	199.000	199.000
1530	SPV.0030	SPECIAL 01. FERTILIZER FOR LAWN TYPE TURF	CWT	9.790	9.790
1540	SPV.0060	SPECIAL 01. LUMINAIRES SPECIAL HPS 150W	EACH	58.000	58.000
1550	SPV.0060	SPECIAL 02. TRAFFIC CONTROL COVERING EXISTING SIGNS	EACH	1.000	1.000
1560	SPV.0060	SPECIAL 03. POLES TYPE 6M	EACH	40.000	40.000
1570	SPV.0060	SPECIAL 04. LIGHTING CONTROLLER	EACH	2.000	2.000
1580	SPV.0120	SPECIAL 01. WATER FOR SEEDED AREAS	MGAL	299.100	299.100
1590	SPV.0165	SPECIAL 01. CONCRETE PAVERS	SF	14,418.000	14,418.000
1600	SPV.0180	SPECIAL 01. PREPARATION FOR LAWN TYPE TURF	SY	12,429.000	12,429.000

100

CLEARING AND GRUBBING

STREET	STA. TO STA.	CLEARING 201.0120 IN. DIA.	GRUBBING 201.0220 IN. DIA.	CLEARING 201.0115 ACRE	GRUBBING 201.0215 ACRE
WESTON AVE.	10+21 RT - 34+00 RT	503	178	-	0.69
WESTON AVE.	13+87 LT - 36+41 LT	336	312	0.10	0.10
		839	**490**	**0.10**	**0.79**

REMOVING AND ABANDONING CULVERTS

STREET	STA. LOCATION	DIA. IN	LENGTH FT	TYPE	203.0100 REMOVING SMALL CULVERT PIPE EACH	204.0270 ABANDONING CULVERT PIPE EACH
WESTON AVE.	9+54, RT	18	30	CMP	1	-
WESTON AVE.	9+75, CTR	18	48	CMP	1	-
WESTON AVE.	12+26, LT	12	42	CPP	1	-
WESTON AVE.	15+02, LT	18	30	CPP	1	-
WESTON AVE.	15+84, RT	12	34	DIP	1	-
WESTON AVE.	15+84, LT	12	36	DIP	1	-
WESTON AVE.	18+85, LT	12	38	CPP	1	-
WESTON AVE.	25+18, LT	24	32	CPP	1	-
WESTON AVE.	25+69, RT	12	22	CPP	1	-
WESTON AVE.	30+31, RT	24	30	CPP	1	-
WESTON AVE.	32+08, LT	18	30	CMP	1	-
WESTON AVE.	33+44, LT	18	22	CMP	1	-
WESTON AVE.	35+00, CTR	42	68	CMP	-	1
WESTON AVE.	38+20, CTR	30	78	CMP	-	2
BIRCH ST.	30+95, RT	12	40	CPP	1	
C.T.H. X	195+00, RT	48	34	CMP	1	-
C.T.H. X	195+34, LT	18	40	CMP	1	-
	TOTAL				**15**	**3**

204.0150 REMOVING CURB AND GUTTER

STREET	STA. LOCATION	TO	STA. LOCATION	L.F.
WESTON AVE.	36+91.5, 17' RT	-	37+29.5, 58' RT	62
WESTON AVE.	36+96, 18' LT	-	37+38, 71' LT	72
WESTON AVE.	37+72, 75' RT	-	38+34, 17' RT	94.5
WESTON AVE.	37+82, 52' LT	-	38+21, 13.5' LT	61
STONE RIDGE DR.	50+30	-	51+40	425
			TOTAL	**715**

204.0155 REMOVING CONCRETE SIDEWALK

STREET	STA. LOCATION	TO	STA. LOCATION	S.Y.
WESTON AVE.	26+66, 33' LT	-	26+66, 43' LT	5.55
			TOTAL	**5.55**

204.0170 REMOVING FENCE

STREET	STA. LOCATION	TO	STA. LOCATION	L.F.
WESTON AVE.	7+50	-	9+13	162
WESTON AVE.	25+25	-	26+15	124
WESTON AVE.	28+75	-	29+12	37
WESTON AVE.	30+32	-	30+50	65
			TOTAL	**388**

204.0205 REMOVING UTILITY POLE(STREET LIGHTS)

STREET	STA. LOCATION	EACH
WESTON AVE.	21+78, 49' RT	1
WESTON AVE.	27+50, 42' LT	1
WESTON AVE.	28+11, 41' LT	1
	TOTAL	**3**

204.0230 REMOVING BUILDING

STREET	STA. LOCATION	LUMP SUM
WESTON AVE.	11+84, RT	1
	TOTAL	**1**

ABANDONING INLETS & MANHOLES

STREET	STA. LOCATION	204.0250 ABANDONING MANHOLES EACH	204.0260 ABANDONING INLETS EACH
C.T.H. X	203+75.5, 4' RT	-	1
C.T.H. X	203+75.5, 4' LT	-	1
WESTON AVE.	27+63, 36' LT	1	-
	TOTAL	**1**	**2**

205.0100 EXCAVATION COMMON

STREET	STATION	TO	STATION	205.0100 EXCAVATION COMMON CUT C.Y.	FILL + 30% C.Y.
WESTON AVE.	7+00	-	41+00	23,837	7,463
BIRCH ST.	27+00	-	32+00	2,996	133
FRANCISCAN WAY	39+22	-	40+92	934	23
STONE RIDGE DR.	49+22	-	50+92	1,087	21
C.T.H. X	191+50	-	206+00	6,091	7,108
			TOTAL	**34,945**	14,748

301.0100.S QMP BASE AGGREGATE

30,751 TONS

305.0120 BASE AGGREGATE DENSE 1 1/4-INCH

STREET	STATION	TO	STATION	C.Y.	TONS
WESTON AVE.	7+00	-	9+62	655.67	1,311.34
BIRCH ST.	27+50	-	32+00	1,327.96	2,655.92
WESTON AVE.	10+38	-	18+23	2,621.94	5,243.88
FRANCISCAN WAY	39+18	-	41+05	650.57	1,301.14
WESTON AVE.	18+96	-	27+43	2,798.06	5,596.12
STONE RIDGE DR.	49+18	-	51+40	781.42	1,562.84
WESTON AVE.	28+19	-	36+52	2,860.27	5,720.54
C.T.H. X	191+50	-	206+00	3,079.94	6,159.88
WESTON AVE.	38+66	-	41+00	524.92	1,049.84
DRIVEWAYS				74.82	149.64
				TOTAL	**30,751**

311.0110 BREAKER RUN

STREET	STATION	TO	STATION	C.Y.	TONS
WESTON AVE.	7+00	-	9+62	670.8	1,341.7
BIRCH ST.	27+50	-	32+00	1,344.6	2,689.3
WESTON AVE.	10+38	-	18+23	2,498.0	4,995.9
FRANCISCAN WAY	39+18	-	41+05	644.7	1,289.4
WESTON AVE.	18+96	-	27+43	2,681.8	5,363.5
STONE RIDGE DR.	49+18	-	51+40	766.8	1,533.6
WESTON AVE.	28+19	-	36+52	2,777.3	5,554.6
C.T.H. X	194+50	-	206+00	5,327.8	10,655.6
WESTON AVE.	38+66	-	41+00	559.9	1,119.8
			TOTAL		**34,543**

415.0090 CONCRETE PAVEMENT 9-INCH

STREET	STA. LOCATION	TO	STA. LOCATION	S.Y.
C.T.H. X	194+50	-	206+00	8,285.8
			TOTAL	**8,285.8**

416.0160 CONCRETE DRIVEWAY 6-INCH

STREET	S.Y.
WESTON AVE.	251.7
BIRCH ST.	26.4
TOTAL	**278.1**

ASPHALTIC PAVEMENT

STREET	STA. - STA.	455.0115 ASPHALTIC MATERIAL PG64-22 TON	455.0120 ASPHALTIC MATERIAL PG64-28 TON	455.0605 TACK COAT GAL	460.1103 HMA PAVEMENT TYPE E-3 TON	465.0120 ASPHALTIC DRIVEWAY & FIELD ENT. TON	465.0125 ASPHALTIC SURFACE TEMPORARY TON
WESTON AVE.	7+00 - 10+50	34.6	27.7	104.9	1,153.49	3.74	-
WESTON AVE.	10+50 - 19+00	44.9	35.9	136.2	1,497.90	-	-
WESTON AVE.	19+00 - 28+25	50.2	40.1	152.2	1,673.68	-	-
WESTON AVE.	28+25 - 36+53	38.1	30.5	115.6	1,271.35	2.31	-
WESTON AVE.	38+70 - 41+00	9.4	7.5	28.6	314.57	5.45	-
C.T.H. X	191+50 - 194+50	12.8	10.3	38.9	427.85	12.47	-
C.T.H. X- TEMP. LANE	194+50 - 206+00	-	-	35.1	-	-	309.2
	TOTALS	**190**	**152**	**611.4**	**6,339**	**24**	**309.2**

QMP HMA PAVEMENT

	460.2000 INCENTIVE DENSITY HMA PAVEMENT DOL	460.3000 QMP HMA MIXTURE TON
TOTALS	4,060	6,339

CONCRETE CURB & GUTTER TYPE A

STREET	STATION	TO	STATION	601.0409 30-INCH RIGHT	601.0409 30-INCH LEFT	601.0405 18-INCH MEDIAN
C.T.H. X	194+50	-	198+28	-	414.5	-
C.T.H. X	194+50	-	198+45	451.7	-	-
C.T.H. X	194+50	-	198+05	-	-	711.0
WESTON AVE.	36+52	-	36+92	-	-	80.0
WESTON AVE.	38+19	-	38+70	-	-	101.0
C.T.H. X	198+98	-	206+00	-	740.2	-
C.T.H. X	199+12	-	206+00	741.8	-	-
C.T.H. X	199+36	-	206+00	-	-	1,327.0
			SUBTOTALS	1,193.5	1,154.7	
			TOTAL	2,348		2,219

REINFORCED CONCRETE APRON END WALLS FOR CULVERT PIPE

STREET	STA. LOCATION	522.1012 APRON ENDWALL FOR CULVERT PIPE 12-INCH EACH	522.1036 APRON ENDWALL FOR CULVERT PIPE 36-INCH EACH	522.1042 APRON ENDWALL FOR CULVERT PIPE 42-INCH EACH	524.0624 SALVAGED APRON ENDWALL FOR CULVERT PIPE 24-INCH EACH
WESTON AVE.	36+36, 76' RT	-	1	-	-
WESTON AVE.	39+50, 42' RT	1	-	-	-
WESTON AVE.	39+50, 40' LT	1	-	-	-
C.T.H. X	194+00, 47' RT	-	-	1	-
C.T.H. X	199+63, 78' LT	-	-	-	1
	TOTALS	2	1	1	1

CONCRETE CURB & GUTTER TYPE D

STREET	STATION	TO	STATION	601.0411 30-INCH RIGHT	601.0411 30-INCH LEFT	601.0407 18-INCH MEDIAN
WESTON AVE.	9+10	-	9+61	-	77.7	-
WESTON AVE.	9+10	-	9+67	89.0	-	-
WESTON AVE.	9+10.5	-	9+42	-	-	63.0
BIRCH ST.	29+17	-	29+45	-	-	56.0
BIRCH ST.	30+58	-	32+00	-	-	284.8
BIRCH ST.	30+81.5	-	32+00	118.4	-	-
BIRCH ST.	30+85	-	32+00	-	114.8	-
WESTON AVE.	10+36	-	18+24	849.7	70.5	-
WESTON AVE.	10+54	-	18+08.5	-	-	1,516.5
WESTON AVE.	10+80	-	18+27	-	732.7	-
FRANCISCAN WAY	39+18	-	39+43	-	-	51.0
FRANCISCAN WAY	40+57	-	41+05	-	-	96.0
FRANCISCAN WAY	40+82	-	41+05	23.0	23.0	-
WESTON AVE.	18+93	-	27+44	-	786.1	-
WESTON AVE.	18+96	-	27+45	872.6	-	-
WESTON AVE.	19+15	-	27+38	-	-	1,652.0
STONE RIDGE DR	49+18	-	49+43	-	-	50.4
STONE RIDGE DR.	50+57	-	51+00	-	-	86.2
STONE RIDGE DR.	50+81	-	51+00	19.3	-	-
STONE RIDGE DR.	50+83	-	51+00	-	16.7	-
WESTON AVE.	28+16	-	36+52	-	791.7	-
WESTON AVE.	28+17	-	36+52	826.8	-	-
WESTON AVE.	28+34	-	36+52	-	-	1,637.0
			SUBTOTALS	2,798.8	2,613.2	-
			TOTALS	5,412		5,493

REINFORCED CONCRETE, HORIZONTAL ELLIPTICAL CULVERT PIPE AND APRON ENDWALL

	523.0129 CULVERT PIPE 29" X 45" LF	523.0529 APRON ENDWALL 29" X 45" EACH
TOTALS	126	1

CONCRETE SIDEWALK

STREET	STA. LOCATION	TO	STA. LOCATION	602.0405 CONCRETE SIDEWALK 4-INCH S.F.	602.0415 CONCRETE SIDEWALK 6-INCH S.F.
WESTON AVE.	9+11, LT	-	9+53, LT	431.3	
WESTON AVE.	8+89, RT	-	9+59, RT	1,013.0	
BIRCH ST.	29+17	-	32+00	1,098.8	150.0
WESTON AVE.	10+43, LT	-	18+20, LT	4,138.2	150.0
WESTON AVE.	10+43, RT	-	18+17, RT	8,447.3	
FRANCISCAN WAY	40+82	-	41+05	116.8	
WESTON AVE.	19+05, LT	-	27+39, LT	3,903.6	450.0
WESTON AVE.	28+28, LT	-	29+00, LT	266.6	90.3
WESTON AVE.	19+03, RT	-	27+38, RT	8,671.8	300.0
STONE RIDGE DR.	49+18	-	51+00	136.4	
WESTON AVE.	28+24, RT	-	37+09, RT	9,486.4	300.0
WESTON AVE.	29+00, LT	-	37+19, LT	4,584.6	122.2
WESTON AVE.	38+19, LT	-	38+70, LT	243.9	
WESTON AVE.	38+00, RT	-	38+70, RT	643.8	
C.T.H. X	194+49, LT	-	197+66, LT	3,161.3	
C.T.H. X	199+60, LT	-	206+00, LT	6,400.7	
			TOTALS	52,745	1,563

602.0501.S CURB RAMP DETECTABLE WARNING FIELD

STREET	STA. LOCATION	SF
BIRCH ST.	INTERSECTION	64
FRANCISCAN WAY	INTERSECTION	64
STONE RIDGE DR.	INTERSECTION	64
C.T.H. X	INTERSECTION	80
C.T.H. X	205+93, LT	16
	TOTAL	288

606.0300 RIPRAP HEAVY

STREET	STATION TO STATION	C.Y.
C.T.H. X	194+20, RT	15.5
C.T.H. X	195+82, LT - 197+91, LT	285.5
C.T.H. X	199+21, LT - 200+03, LT	69
	TOTAL	370

STORM SEWER PIPE SUMMARY

	608.0312 12- INCH RCP CLASS III L.F.	608.0315 15-INCH RCP CLASS III L.F.	608.0318 18-INCH RCP CLASS III L.F.	608.0324 24-INCH RCP CLASS III L.F.	608.0330 30-INCH RCP CLASS III L.F.	608.0336 36-INCH RCP CLASS III L.F.	608.0342 42-INCH RCP CLASS III L.F.	607.0600.S 42-INCH CORREGATED POLYETHYLENE L.F.
TOTALS	1,134	443.5	132	895	678	293	182	392

CATCH BASINS AND MANHOLES

STREET	STATION TO STATION	611.0103 CATCH BASINS TYPE 2 EACH	611.0612 INLET COVERS TYPE C EACH	611.0624 INLET COVERS TYPE H EACH	611.0201 MANHOLES TYPE 1 EACH	611.0210 MANHOLES TYPE 3 EACH	611.0420 RECONSTRUCTION MANHOLE EACH	611.0530 MANHOLE COVERS TYPE J EACH
WESTON AVE.	8+00 - 10+35	10	2	8	2	-	-	2
WESTON AVE.	10+35 - 15+50	4	-	4	1	-	-	1
WESTON AVE.	15+50 - 23+00	12	-	12	-	1	1	1
WESTON AVE.	23+00 - 26+00	4	-	4	-	-	-	-
WESTON AVE.	26+00 - 31+00	12	-	12	-	2	-	3
WESTON AVE.	31+00 - 38+00	8	-	8	-	3	2	3
WESTON AVE.	38+00 - 40+00	4	-	4	-	-	1	-
C.T.H. X	194+00 - 195+00	4	-	4	-	1	1	1
C.T.H. X	195+00 - 200+00	-	2	-	-	3	-	-
C.T.H. X	201+00 - 206+00	8	-	8	-	1	3	2
		66	4	64	3	11	8	13

611.8110 ADJUSTING MANHOLE COVERS

STREET	TYPE	EACH
WESTON AVE.	SANITARY	12
WESTON AVE.	STORM	6
	TOTAL	18

611.9800.S PIPE GRATES

STREET	PIPE SIZE	EACH
WESTON AVE.	36"	1
C.T.H. X	42"	1
	TOTAL	2

612.0406 PIPE UNDERDRAIN WRAPPED, 6-INCH

STREET	STATION	TO	STATION	L.F.
WESTON AVE.	9+04	-	38+74	11,880
C.T.H. X	194+55	-	198+00	1,380
C.T.H. X	199+40	-	206+00	2,640
			TOTAL	15,900

612.0902.S INSULATION BOARD POLYSTYRENE (3-INCH THICK)

STREET	STATION	TO	STATION	S.Y.
WESTON AVE.	7+00	-	10+50	5.34
BIRCH ST.	27+50	-	32+00	1.78
WESTON AVE.	10+50	-	19+00	7.12
FRANCISCAN WAY	39+00	-	41+00	1.78
WESTON AVE.	19+00	-	28+25	1.78
STONE RIDGE DR.	49+00	-	51+00	1.78
WESTON AVE.	28+25	-	36+53	10.68
WESTON AVE.	38+70	-	41+00	3.56
			TOTAL	33.82

614.0620.S MARKER POST FOR CULVERT END FLEXIBLE

STREET	STA. LOCATION	EACH
WESTON AVE.	36+36, 76' RT	1
WESTON AVE.	39+50, 42' RT	1
WESTON AVE.	39+50, 40' LT	1
C.T.H. X	194+00, 47' RT	1
C.T.H. X	199+63, 78' LT	1
	TOTAL	5

CONCRETE MEDIAN SLOPED NOSE

STREET	STATION	620.0300 MEDIAN S.F.
WESTON AVE.	9+42	48.1
BIRCH ST.	29+45	78.8
BIRCH ST.	30+58	72.8
WESTON AVE.	10+57	47.7
WESTON AVE.	18+17	47.6
FRANCISCAN WAY	39+43	80.5
FRANCISCAN WAY	40+57	57.6
WESTON AVE.	19+15	41.4
WESTON AVE.	27+39	59.3
STONE RIDGE DR.	49+43	81.0
STONE RIDGE DR.	50+57	81.9
WESTON AVE.	28+34	41.2
WESTON AVE.	36+92	41.6
C.T.H. X	198+06	40.2
C.T.H. X	199+36	40.2
WESTON AVE.	38+19	41.4
	TOTALS	901.3

621.1100 LANDMARK REFERENCE MONUMENTS & CAST IRON COVERS

STREET	STATION	LOCATION	EACH
WESTON AVE.	10+00	0' RT	1
WESTON AVE.	36+76.76	0' RT	1
		TOTAL	2

624.0100 WATER (DUST SUPPRESSION)

STREET	STATION	TO	STATION	S.F.	MGAL
WESTON AVE.	7+00	-	9+62	13585	16.57
BIRCH ST.	27+50	-	32+00	27229	33.22
WESTON AVE.	10+38	-	18+23	50584	61.71
FRANCISCAN WAY	39+18	-	41+05	13055	15.93
WESTON AVE.	18+96	-	27+43	54306	66.25
STONE RIDGE DR.	49+18	-	51+40	15528	18.94
WESTON AVE.	28+19	-	36+52	56241	68.61
C.T.H X	191+50	-	206+00	107888	131.61
WESTON AVE.	38+66	-	41+00	11338	13.83
			TOTAL		426.68

LAWN AREAS

STREET	SPV.0120.01 WATER FOR SEEDED AREAS MGAL	625.0100 TOPSOIL S.Y.	625.0500 SALVAGED TOPSOIL S.Y.	627.0200 MULCHING S.Y.	629.0210 FERTILIZER TYPE B CWT.	630.0140 SEEDING MIXTURE 40 LB.	630.0110 SEEDING MIXTURE 10 L.B.	630.0110 SEEDING MIXTURE 10 L.B.	630.0200 TEMPORARY SEEDING LB.	SPV.0180.01 PREPARATION FOR LAWN TYPE TURF S.Y.	SPV.0030.01 FERTILIZER FOR LAWN TYPE TURF CWT.
WESTON AVE.											
7+00 - 10+00	11.7	487	-	487	-	17.5	-	-	6.6	487	0.31
10+00 - 18+60	72.6	3,016	-	3,016	-	108.6	-	-	40.7	3,016	1.90
18+60 - 27+81	64.8	2,691	-	2,691	-	96.9	-	-	36.3	2,691	1.70
27+81 - 36+00	61.2	2,542	-	2,542	-	91.5	-	-	34.3	2,542	1.60
38+70 - 41+00	1.9	79	-	79	-	2.8	-	-	1.1	79	0.05
BIRCH ST.											
28+80 -32+00	23.7	985	-	985	-	35.5	-	-	13.3	985	0.62
FRANCISCAN WAY											
39+22 - 40+92	5.5	227	-	227	-	8.2	-	-	3.1	227	0.14
STONE RIDGE DR.											
49+22 - 50+92	6.2	258	-	258	-	9.3	-	-	3.5	258	0.16
C.T.H. X											
191+50 - 206+00	51.6	2,144	-	2,144	-	77.2	-	-	28.9	2,144	1.35
UNDISTRIBUTED	-	-	-		1.50	111.9	33.6	33.6	41.9	-	1.96

RURAL SEEDING

WESTON AVE. - South of Path											
7+00 - 10+00	-	-	429	429	0.27	-	5.8	5.8	-	-	-
12+50 - 18+60	-	-	568	568	0.36	-	7.7	7.7	-	-	-
18+60 - 27+81	-	-	648	648	0.41	-	8.7	8.7	-	-	-
27+81 - 36+00	-	-	864	864	0.54	-	11.7	11.7	-	-	-
38+70 - 41+00	-	-	875	875	0.55	-	11.8	11.8	-	-	-
BIRCH ST.					0.00						
28+80 -32+00 SW Quadrant	-	-	384	384	0.24	-	5.2	5.2	-	-	-
C.T.H. X					0.00						
194+50 - 198+70	-	-	5,456	5,456	3.44	-	73.7	73.7	-	-	-
199+19 - 201+07 NW Quad.	-	-	717	717	0.45	-	9.7	9.7	-	-	-
TOTALS	**299.1**	**12,429**	**9,941**	**22,370**	**7.50**	**447.4**	**134.2**	**134.2**	**167.8**	**12,429**	**9.79**

SILT FENCE

STREET	STATION - STATION	628.1505 SILT FENCE DELIVERED L.F.	628.1510 SILT FENCE INSTALLED L.F.	628.1520 SILT FENCE MAINTENANCE L.F.
WESTON AVE.	7+52 - 9+44, RT	228	228	228
WESTON AVE.	11+17 - 17+85, RT	675	675	675
WESTON AVE.	17+85 - 19+36, RT	191	191	191
WESTON AVE.	19+36 - 19+91, RT	56	56	56
WESTON AVE.	22+74 - 31+00, RT	853	853	853
WESTON AVE.	31+00 - 35+95, RT	521	521	521
WESTON AVE.	33+70 - 36+30, LT	268	268	268
BIRCH ST.	26+88 - 29+17, LT	258	258	258
BIRCH ST.	26+88 - 28+70, RT	211	211	211
C.T.H. X	191+20 - 197+85, LT	699	699	699
C.T.H. X	199+35 - 206+00, LT	675	675	675
	TOTALS	**4,635**	**4,635**	**4,635**

EROSION MAT

STREET	STATION/LOCATION	628.2005 EROSION MAT DELIVERED CLASS I TYPE A S.Y.	628.3005 EROSION MAT INSTALLED CLASS I TYPE A S.Y.
WESTON AVE.	33+70 - 33+90, RT	10.0	10.0
WESTON AVE.	34+25 - 35+75, LT	246.7	246.7
WESTON AVE.	35+30 - 35+50, RT	10.0	10.0
C.T.H. X	192+40 - 194+08, RT	261.3	261.3
	TOTALS	**528**	**528**

EROSION CONTROL MOBILIZATION

LOCATION	628.1905 MOBILIZATION L.S.	628.1910 EMERGENCY MOBILIZATION L.S.
WESTON	2	-
UNDISTRIBUTED	-	1
TOTAL	**2**	**1**

INLET PROTECTION

STREET	STATION TO STATION	628.7005 TYPE A EACH	628.7010 TYPE B EACH	628.7015 TYPE C EACH	628.7020 TYPE D EACH
WESTON AVE.	8+00 - 19+00	26	-	14	12
WESTON AVE.	19+00 - 31+00	16	-	16	-
WESTON AVE.	31+00 - 41+00	14	-	8	4
C.T.H. X	199+00 - 202+00	14	2	8	4
	TOTALS	**70**	**2**	**46**	**20**

PERMANENT SIGNS

SIGN NO.	SIGN CODE	MESSAGE	SIZE	637.0202 SIGNS REFLECTIVE TYPE II S.F.	634.0616 WOOD POSTS 4" X 6" 16-FT	634.0618 WOOD POSTS 4" X 6" 18-FT	REMARKS	LOCATION	
								STATION	OFFSET
ROAD SIGNS									
1-01	W6-3	TWO-WAY TRAFFIC	36 X 36	9.00	-	1		7+08	20' L
1-02	W-6-1	DIVIDED HIGHWAY	36 X 36	9.00	-	1		7+08	20' R
1-03	R2-1	SPEED LIMIT 35 MPH	24 X 30	5.00	-	1		8+40	32' L
1-04	W4-2R	LANE REDUCTION TRANSITION	36 X 36	9.00	-	-	ON LIGHT POLE	9+25	43' L
1-05	R4-7	KEEP RIGHT	24 X 30	5.00	1	-		9+10	6' L
1-06	R1-1	STOP	30 X 30	4.86	1	-		9+38	7' L
1-06A	R1-3	4-WAY	12 X 6	0.50	-	-	WITH 1-06	-	-
1-07	R1-1	STOP	30 X 30	4.86	-	-	ON LIGHT POLE	9+30	38' R
1-07A	R1-3	4-WAY	12 X 6	0.50	-	-	WITH 1-07	-	-
1-08	R1-1	STOP	30 X 30	4.86	1	-		9+52	62' L
1-08A	R1-3	4-WAY	12 X 6	0.50	-	-	WITH 1-08	-	-
1-09	R1-1	STOP	30 X 30	4.86	1	-		10+00	62' L
1-09A	R1-3	4-WAY	12 X 6	0.50	-	-	WITH 1-09	-	-
1-10	R4-7	KEEP RIGHT	24 X 30	5.00	-	-	WITH 1-06	-	-
1-11	R4-7	KEEP RIGHT	24 X 30	5.00	-	-	WITH 1-09	-	-
1-12	R4-7	KEEP RIGHT	24 X 30	5.00	-	-	WITH 1-14	-	-
1-13	R4-7	KEEP RIGHT	24 X 30	5.00	-	-	WITH 1-18	-	-
1-14	R1-1	STOP	30 X 30	4.86	1	-		10+00	59' R
1-14A	R1-3	4-WAY	12 X 6	0.50	-	-	WITH 1-14	-	-
1-15	R4-7	KEEP RIGHT	24 X 30	5.00	1	-		10+05	80' R
1-16	R1-1	STOP	30 X 30	4.86	1	-		10+42	60' R
1-16A	R1-3	4-WAY	12 X 6	0.50	-	-	WITH 1-16	-	-
1-17	R1-1	STOP	30 X 30	4.86	1	-	ON LIGHT POLE	10+61	45' L
1-17A	R1-3	4-WAY	12 X 6	0.50	-	-	WITH 1-17	-	-
1-18	R1-1	STOP	30 X 30	4.86	1	-		10+61	3' R
1-18A	R1-3	4-WAY	12 X 6	0.50	-	-	WITH 1-18	-	-
1-19	R2-1	SPEED LIMIT 35 MPH	24 X 30	5.00	-	-	ON LIGHT POLE	10+73	38' R
1-20	R3-7R	RIGHT LANE MUST TURN RIGHT	30 X 30	6.25	-	-	ON LIGHT POLE	13+59	40' L
1-21	R3-7R	RIGHT LANE MUST TURN RIGHT	30 X 30	6.25	-	-	ON LIGHT POLE	12+15	42' L
1-22	R7-1D	NO PARKING	18 X 24	3.00	-	-	ON LIGHT POLE	12+15	38' R
2-1	R7-1D	NO PARKING	18 X 24	3.00	1	-		15+18	40' L
2-2	R2-1	SPEED LIMIT 35 MPH	24 X 30	5.00	-	-	ON LIGHT POLE	16+44	42' L
2-3	R1-1	STOP	30 X 30	4.86	1	-		18+18	60' L
2-4	R1-1	STOP	30 X 30	4.86	1	-		18+60	58' L
2-5	R4-7	KEEP RIGHT	24 X 30	5.00	1	-		18+08	2' L
2-6	R4-7	KEEP RIGHT	24 X 30	5.00	-	-	WITH 2-4	-	-
2-7	R4-7	KEEP RIGHT	24 X 30	5.00	-	-	WITH 2-8	-	-
2-8	R1-1	STOP	30 X 30	4.86	1	-		18+08	60' R
2-9	R1-1	STOP	30 X 30	4.86	1	-		19+02	60' R
2-10	R4-7	KEEP RIGHT	24 X 30	5.00	1	-		19+21	2' R
2-11	R2-1	SPEED LIMIT 35 MPH	24 X 30	5.00	-	-	ON LIGHT POLE	19+32	38' R
2-12	R7-1D	NO PARKING	18 X 24	3.00	-	-	ON LIGHT POLE	21+00	38' R
SUBTOTALS OF SHEET 1				**180.82**	**16**	**3**			

STATE PROJECT NUMBER: 6999-10-75	HWY: WESTON AVENUE	COUNTY: MARATHON	MISCELLANEOUS QUANTITIES	SHEET NO: 108	E

FILE NAME: P:\32290200\DOT\WESTON AVE\MSBORDER.PRT ORIGINATOR: REV. DATE: PLOT DATE:

PERMANENT SIGNS

SIGN NO.	SIGN CODE	MESSAGE	SIZE	637.0202 SIGNS REFLECTIVE TYPE II S.F.	634.0616 WOOD POSTS 4" X 6" 16-FT	634.0618 WOOD POSTS 4" X 6" 18-FT	REMARKS	LOCATION	
								STATION	OFFSET
	ROAD SIGNS								
3-01	R7-1D	NO PARKING	18 X 24	3.00	1	-	ON LIGHT POLE	25+46	42' L
3-02	R2-1	SPEED LIMIT 35 MPH	24 X 30	5.00	-	-	ON LIGHT POLE	25+89	42' L
3-03	R1-1	STOP	30 X 30	4.86	1	-		27+35	59' L
3-04	R4-7	KEEP RIGHT	24 X 30	5.00	1	-		27+25	2' L
3-05	R1-1	STOP	30 X 30	4.86	1	-		27+71	62' L
3-06	R4-7	KEEP RIGHT	24 X 30	5.00	-	-	WITH 3-05	-	-
3-07	R4-7	KEEP RIGHT	24 X 30	5.00	-	-	WITH 3-08	-	-
3-08	R1-1	STOP	30 X 30	4.86	1	-		27+71	61' R
3-09	R1-1	STOP	30 X 30	4.86	1	-		28+23	60' R
3-10	R4-7	KEEP RIGHT	24 X 30	5.00	1	-		28+38	2' R
3-11	R2-1	SPEED LIMIT 35 MPH	24 X 30	5.00	-	-	ON LIGHT POLE	28+52	38' R
3-12	R7-1D	NO PARKING	18 X 24	3.00	-	-	ON LIGHT POLE	31+24	38' R
4-01	W3-3	SIGNAL AHEAD	36 X 36	9.00	-	-	ON LIGHT POLE	33+00	38' R
4-02	R3-55L	LEFT TURN LANE	24 X 30	5.00	1	-		32+96	3' R
4-03	R7-1D	NO PARKING	18 X 24	3.00	-	-	ON LIGHT POLE	34+17	40' L
4-04	R2-1	SPEED LIMIT 35 MPH	24 X 30	5.00	-	-	ON LIGHT POLE	35+54	40' L
5-01	R4-7	KEEP RIGHT	24 X 30	5.00	-	-	ON SIGNAL POLE	36+75	7' L
5-02	R4-7	KEEP RIGHT	24 X 30	5.00	-	-	ON SIGNAL POLE	37+52	70' R
5-03	R4-7	KEEP RIGHT	24 X 30	5.00	-	-	ON SIGNAL POLE	37+66	75' L
5-04	R4-7	KEEP RIGHT	24 X 30	5.00	-	-	ON SIGNAL POLE	38+27	1' R
5-05	R4-7	KEEP RIGHT	24 X 30	5.00	1	-		38+69	3' R
5-06	W4-2R	LANE REDUCTION TRANSITION	36 X 36	9.00	1	-		38+42	36' R
5-07	W6-3	TWO WAY TRAFFIC	36 X 36	9.00	-	1		41+00	21' R
5-08	W6-1	DIVIDED HIGHWAY	36 X 36	9.00	-	1		41+00	21' L
5-09	W3-3	SIGNAL AHEAD	36 X 36	9.00	-	1		42+00	21' L
6-01	W6-1	DIVIDED HIGHWAY	36 X 36	9.00	-	-	ON SIGNAL POLE	192+32	41' L
6-02	W6-3	TWO-WAY TRAFFIC	36 X 36	9.00	-	-	ON SIGNAL POLE	191+31	42' R
6-03	W3-3	SIGNAL AHEAD	36 X 36	9.00	-	-	ON SIGNAL POLE	194+34	42' R
6-04	R2-1	SPEED LIMIT 35 MPH	24 X 30	5.00	-	-	WITH 6-03	-	-
6-05	R4-7	KEEP RIGHT	24 X 30	5.00	1	-		194+53	3' R
6-06	W6-2	DIVIDED HIGHWAY ENDS	36 X 36	9.00	-	-	ON LIGHT POLE	195+40	41' L
6-07	W4-2R	LANE REDUCTION TRANSITION	36 X 36	9.00	-	-	ON LIGHT POLE	197+20	41' L
6-08	R7-1D	NO PARKING	18 X 24	3.00	-	-	ON LIGHT POLE	196+32	41' R
7-01	R2-1	SPEED LIMIT 45 MPH	24 X 30	5.00	-	-	ON LIGHT POLE	197+21	41' L
7-02	R2-1	SPEED LIMIT 35 MPH	24 X 30	5.00	-	-	ON LIGHT POLE	200+45	39' R
7-03	R7-1D	NO PARKING	18 X 24	3.00	-	-	ON LIGHT POLE	202+45	40' R
8-01	R3-55L	LEFT TURN LANE	24 X 30	5.00	1	-		203+54	4' L
8-02	R7-1D	NO PARKING	18 X 24	3.00	-	-	ON LIGHT POLE	205+47	41' L
SUBTOTALS OF SHEET 2				**217.44**	**12**	**3**			

PERMANENT SIGNS

SIGN NO.	SIGN CODE	MESSAGE	SIZE	637.0202 SIGNS REFLECTIVE TYPE II S.F.	634.0616 WOOD POSTS 4" X 6" 16-FT	634.0618 WOOD POSTS 4" X 6" 18-FT	REMARKS	LOCATION	
								STATION	OFFSET
	BIKE ROUTE SIGNS								
1-2B(1)	D11-1	BIKE ROUTE & SYMBOL	24 X 18	3.00	-	-	ON LIGHT POLE	9+29	38' R
1-2B(2)	M7-1	ARROW (UP)	9 X 12	0.75	-	-	WITH 1-2B(1)	-	-
1-3B	R1-1	STOP	18 X 18	1.75	-	-	ON LIGHT POLE	10+74	38' R
1-4B(1)	D11-1	BIKE ROUTE & SYMBOL	24 X 18	3.00	-	-	ON LIGHT POLE	10+74	38' R
1-4B(2)	M7-1	ARROW (UP)	9 X 12	0.75	-	-	WITH 1-4B(1)	-	-
2-2B(1)	D11-1	BIKE ROUTE & SYMBOL	24 X 18	3.00	-	-	ON LIGHT POLE	17+87	30' R
2-2B(2)	M7-1	ARROW (UP)	9 X 12	0.75	-	-	WITH 2-2B(1)	-	-
2-5B(1)	D11-1	BIKE ROUTE & SYMBOL	24 X 18	3.00	-	-	WITH 2-4B	-	-
2-5B(2)	M7-1	ARROW (UP)	9 X 12	0.75	-	-	WITH 2-4B	-	-
3-2B(1)	D11-1	BIKE ROUTE & SYMBOL	24 X 18	3.00	-	-	ON LIGHT POLE	27+09	38' R
3-2B(2)	M7-1	ARROW (UP)	9 X 12	0.75	-	-	WITH 3-2B(1)	-	-
3-5B(1)	D11-1	BIKE ROUTE & SYMBOL	24 X 18	3.00	-	-	WITH 3-4B	-	-
3-5B(2)	M7-1	ARROW (UP)	9 X 12	0.75	-	-	WITH 3-4B	-	-
4-2B(1)	D11-1	BIKE ROUTE & SYMBOL	24 X 18	3.00	-	-	WITH 4-1B	-	-
4-2B(2)	M7-1	ARROW (DOUBLE)	9 X 12	0.75	-	-	WITH 4-2B(1)	-	-
4-2B(3)	M7-1	ARROW (UP)	9 X 12	0.75	-	-	WITH 4-2B(1)	-	-
7-2B(1)	D11-1	BIKE ROUTE & SYMBOL	24 X 18	3.00	-	-	WITH 7-1B	-	-
7-2B(2)	M7-1	ARROW (UP)	9 X 12	0.75	-	-	WITH 7-1B	-	-
7-2B(3)	M7-1	ARROW (RIGHT)	12 X 9	0.75	-	-	WITH 7-1B	-	-
7-4B(1)	D11-1	BIKE ROUTE & SYMBOL	24 X 18	3.00	-	-	ON SIGNAL POLE	199+43	43' L
7-4B(2)	M7-1	ARROW (UP)	9 X 12	0.75	-	-	WITH 7-4B(1)	-	-
SUBTOTALS OF SHEET 3				**37.00**	**0**	**0**			

PERMANENT SIGNS

SIGN NO.	SIGN CODE	MESSAGE	SIZE				REMARKS	LOCATION	
								STATION	OFFSET
CROSS WALK PUSH BUTTON SIGNS - FOR INFORMATION ONLY									
5-1X	R10-3B	CROSS WALK INFORMATION	9 X 12		-	-	ON SIGNAL POLE	36+68	38' R
5-2X	R10-3B	CROSS WALK INFORMATION	9 X 12		-	-	ON SIGNAL POLE	97+87	42' L
5-3X	R10-3B	CROSS WALK INFORMATION	9 X 12		-	-	ON SIGNAL POLE	36+72	42' L
5-4X	R10-3B	CROSS WALK INFORMATION	9 X 12		-	-	ON SIGNAL POLE	199+42	42' L
5-5X	R10-3B	CROSS WALK INFORMATION	9 X 12		-	-	ON SIGNAL POLE	38+28	42' L
5-6X	R10-3B	CROSS WALK INFORMATION	9 X 12		-	-	ON SIGNAL POLE	38+28	42' L
5-7X	R10-3B	CROSS WALK INFORMATION	9 X 12		-	-	ON SIGNAL POLE	38+20	38' R
5-8X	R10-3B	CROSS WALK INFORMATION	9 X 12		-	-	ON SIGNAL POLE	38+20	38' R
SUBTOTALS OF SHEET 1				**180.82**	**16**	**3**			
SUBTOTALS OF SHEET 2				**217.44**	**12**	**3**			
SUBTOTALS OF SHEET 3				**37.00**	**0**	**0**			
PROJECT TOTALS				**435.26**	**28**	**6**			

REMOVING SMALL SIGN AND SUPPORTS

STREET		638.2602 SIGNS TYPE II EACH	638.3000 SIGN SUPPORTS EACH
WESTON AVE.		20	20
BIRCH STREET		1	1
C.T.H. X		2	2
	TOTAL	23	23

645.0140 GEOTEXTILE FABRIC, TYPE SAS

STREET	STATION	TO	STATION	S.Y.
WESTON AVE.	7+00	-	9+62	1,509.40
BIRCH ST.	27+50	-	32+00	3,025.45
WESTON AVE.	10+38	-	18+23	5,620.48
FRANCISCAN WAY	39+18	-	41+05	1,450.59
WESTON AVE.	18+96	-	27+43	6,034.03
STONE RIDGE DR.	49+18	-	51+40	1,725.32
WESTON AVE.	28+19	-	36+52	6,249.01
C.T.H. X	194+50	-	206+00	11,987.66
WESTON AVE.	38+66	-	41+00	1,259.81
			TOTAL	38,862

TRAFFIC CONTROL SUMMARY

LOCATION		643.0300 DRUMS DAYS	643.0420 BARRICADES TYPE III DAYS	643.0705 WARNING LIGHTS TYPE A DAYS	643.0715 WARNING LIGHTS TYPE C DAYS	643.0900 SIGNS DAYS	SPV.0060.02 COVERING SIGNS EACH	643.1000 SIGNS FIXED MESSAGE SF
WESTON AVE.		-	608	1,216	-	912	-	25
BIRCH ST.		-	1,368	2,128	-	912	-	6
STONE RIDGE DR.		-	912	1,824	-	912	-	-
C.T.H. X		8,664	2,128	-	3,192	4,560	1	15
UNDISTRIBUTED		1,520	-	-	-	-	-	-
STAGE II ONLY: ADDITIONAL TRAFFIC CONTROL								
WESTON AVE.		-	988	1,672	-	988	-	-
BIRCH ST.		-	-	-	-	-	-	-
STONE RIDGE DR.		-	-	-	-	-	-	-
C.T.H. X		532	608	-	76	532	-	-
	TOTALS	10,716	6,612	6,840	3,268	8,816	1	46

645.0120 GEOTEXTILE FABRIC, TYPE HR

STREET	STATION TO STATION		S.Y.
C.T.H. X	194+20, RT		10.3
C.T.H. X	195+82, LT - 197+91, LT		190.3
C.T.H. X	199+21, LT - 200+03, LT		46.0
		TOTAL	246.7

PAVEMENT MARKINGS EPOXY

STREET	FROM - TO	646.0106 4 INCH EPOXY WHITE L.F.	646.0106 4 INCH EPOXY YELLOW L.F.	646.0226 CHANNELIZING 8 INCH WHITE L.F.	647.0166 ARROWS EPOXY TYPE 2 EACH	647.0196 ARROWS EPOXY TYPE 5 EACH	647.0356 WORDS EPOXY EACH	647.0566 STOP LINE 18 INCH WHITE L.F.	647.0606 ISLAND NOSE EPOXY EACH	647.0746 DIAGONAL 24 INCH YELLOW L.F.	647.0776 CROSSWALK 12 INCH WHITE L.F.
WESTON AVE.	7+00 - 9+45	-	422	33	1	-	1	39	-	-	-
WESTON AVE.	9+45 - 10+52	-	335	-	-	-	-	63	4	-	692
WESTON AVE.	10+52 - 18+00	342	-	200	3	-	3	39	-	-	-
WESTON AVE.	18+00 - 19+15	-	-	-	-	-	-	62	4	-	681
WESTON AVE.	19+15 - 27+25	395	-	116	1	-	1	-	-	-	-
WESTON AVE.	27+25 - 28+35	130	158	-	-	-	-	64	4	56	696
WESTON AVE.	28+35 - 37+00	419	-	470	3	-	3	43	1	-	-
WESTON AVE.	37+00 - 38+10	-	-	-	-	-	-	-	-	-	769
WESTON AVE.	38+10 - 41+00	13	461	53	1	-	1	44	1	-	-
C.T.H. X	191+50 - 194+50	150	600	-	-	-	-	-	-	174	-
C.T.H. X	194+50 - 198+15	180	-	114	2	2	1	44	1	-	-
C.T.H. X	198+15 - 213+50	564	-	325	2	-	2	44	1	-	-
	TOTALS	2,193	1,976	**1,311**	**13**	**2**	**12**	**442**	**16**	**230**	**2,838**
			4,169								

PAVEMENT MARKINGS

STAGE	STREET	FROM - TO	646.0600 REMOVING PAVEMENT MARKINGS L.F.	649.0200 TEMPORARY PAVEMENT WHITE MARKINGS L.F.	649.0200 TEMPORARY PAVEMENT YELLOW MARKINGS L.F.
1	C.T.H. X	189+00 - 206+00	395	3,228	3,400
1	C.T.H. X	206+00 - 213+50	100	57	857
2	C.T.H. X	189+00 - 206+00	268	2,250	3,400
2	C.T.H. X	206+00 - 213+50	3,268	45	890
		TOTALS	**4,031**	5,580	8,547
				14,127	

CONDUIT RIGID NONMETALLIC SCHEDULE 40

INTERSECTION		652.0225 2-INCH L.F.	652.0235 3-INCH L.F.
BIRCH ST.		274	1,046
FRANCISCAN WAY		422	1,016
STONE RIDGE DR.		326	1,018
	TOTALS	**1,022**	**3,080**

ADDITIONAL QUANTITIES SHOWN ON SIGNAL & LIGHTING PLANS

652.0340 CONDUIT RIGID NONMETALLIC SCHEDULE 80 4-INCH

STREET	STA. LOCATION	L.F.
WESTON AVE.	13+30.00	60
WESTON AVE.	17+10.00	60
WESTON AVE.	22+00.00	60
WESTON AVE.	26+00.00	60
WESTON AVE.	31+50.00	60
CAMP PHILLIPS RD	195+50.00	60
CAMP PHILLIPS RD	203+50.00	60
	TOTAL	**420**

TRAFFIC DETECTOR LOOPS

LOCATION		SIZE	DISTANCE FROM PULL BOX	652.0800 CONDUIT LOOP DETECTOR LF
BIRCH ST. INTERSECTION				
WESTON AVE.	9+43.88, 3.5' RT	6 X 20	8	68
WESTON AVE.	9+70.33, 55.35' LT	6 X 20	9	70
WESTON AVE.	9+82.32, 55.82' LT	6 X 20	13	78
BIRCH ST.	31+76.3, 21.5' LT	6 X 20	10	72
WESTON AVE.	10+16.26, 54.4' RT	6 X 20	13	78
WESTON AVE.	10+28.26, 54.6' RT	6 X 20	10	72
WESTON AVE.	10+56.35, 7.5' LT	6 X 20	7	66
WESTON AVE.	12+36.35, 23.5' LT	6 X 18	6	60
FRANCISCAN WAY INTERSECTION				
WESTON AVE.	16+25.8, 18.5' RT	6 X 18	7	62
WESTON AVE.	18+35.29, 56.58' LT	6 X 20	9	70
WESTON AVE.	18+47.29, 56.58' LT	6 X 20	8	68
FRANCISCAN WAY	41+76, 19' LT	6 X 20	10	72
WESTON AVE.	18+75.29, 55.5' RT	6 X 20	12	76
WESTON AVE.	18+87.3, 55.5' RT	6 X 20	9	70
WESTON AVE.	19+12.55, 7.5' LT	6 X 20	7	66
WESTON AVE.	20+92.55, 23.5' LT	6 X 18	8	64
STONE RIDGE DR. INTERSECTION				
WESTON AVE.	25+45.79, 18.75' RT	6 X 18	7	62
WESTON AVE.	27+52.77, 55.5' LT	6 X 20	9	70
WESTON AVE.	27+64.77, 55.5' LT	6 X 20	13	78
WESTON AVE.	27+96.67, 55.5' RT	6 X 20	12	76
WESTON AVE.	28+08.67, 55.5' RT	6 X 20	10	72
WESTON AVE.	28+32.44, 7.5' LT	6 X 20	8	68
WESTON AVE.	30+12.32, 23.5' LT	6 X 18	9	70
			TOTAL	**1,608**

ADDITIONAL QUANTITIES SHOWN ON SIGNAL & LIGHTING PLANS

PULL BOXES

INTERSECTION	653.0135 PULL BOXES STEEL 24 X 36 EACH	653.0140 PULL BOXES STEEL 24 X 42 EACH
BIRCH ST.	2	13
FRANCISCAN WAY	3	13
STONE RIDGE DR.	2	13
TOTALS	7	39

ADDITIONAL QUANTITIES SHOWN ON SIGNAL & LIGHTING PLANS

690.0100 SAWING EXISTING PAVEMENT

STREET	STATION	L.F.
WESTON AVE.	7+00	24
WESTON AVE.	41+00	28
C.T.H. X	191+50	24
BIRCH ST.	27+50	22
BIRCH ST.	32+00	65
STONE RIDGE DR.	51+00	36
	TOTAL	199

SPV.0165.01 CONCRETE PAVERS

STREET	STA., LOCATION			S.F.
BIRCH ST.		INTERSECTION		1,692
WESTON AVE.	11+56	-	17+93	1,692
FRANCISCAN WAY		INTERSECTION		1,584
WESTON AVE.	20+25	-	27+13	1,836
STONE RIDGE DR.		INTERSECTION		2,160
WESTON AVE.	30+00	-	33+96	1,062
C.T.H. X		INTERSECTION		4,392
			TOTAL	14,418

NEW ITEMS

ITEM DESCRIPTION	ITEM CODE	PROP. LN.	ITEM TYPE	UNIT	PROPOSED QTY.	UNIT PRICE	DOLLAR VALUE
POSTS TUBULAR STEEL 2"x2"x12'	634.0812	1630	CHANGE ORDER	EACH	32	99.40	$ 3,180.80
POSTS TUBULAR STEEL 2"x2"x14'	634.0814	1635	"	"	6	105.00	$ 630.00
TEMP. PVT MARKING REMOVABLE TAPE 4-IN	649.0460	1605	"	LF	7,450	1.20	$ 8,940.00
BASE AGGREGATE OPEN GRADED	310.0110	1610	"	TON	1,800	10.00	$ 18,000
APR ENDWLS FOR CULVERT PIPE STEEL 42-IN	521.1042	1615	"	EACH	1	1,150.00	$ 1,150.00
PIPE GRATES FOR APRON ENDWALLS FOR CULVERT PIPE STEEL 42-IN	611.9800.S	1620	"	EACH	1	800.00	$ 800.00
CURB RAMP DETECTABLE WARNING FIELD	602.0561.S	1625	"	SF	368.00	44.10	$ 16,228.80
SPECIAL FOLDING STOP SIGNS, 30"x30", TYPE II REFLECTIVE	SPV.0060	1640	"	EACH	4	134.50	$ 538.00
SPECIAL 02 NON-CONFORMING GEOTEXTILE FABRIC, TYPE 5AS	SPV.0180	1645	"	SY	28,185.48	0.07500	$ 2,112.41

CONTROLLERS

LIGHTING CONTROLLERS SPV.0060.04	LOCATION STATION	LOCATION OFFSET	SERVICE SIZE	CONCRETE CONTROL CABINET BASES TYPE 9 SPECIAL 654.0217 (EACH)	SERVES	NOTES
CONTROLLER #1	9+33	64.0LT	200A, 120/240 VOLTS	1	WESTON AVE.	1
CONTROLLER #2	199+53	78.0RT	200A, 120/240 VOLTS	1	CTH X & WESTON AVE.	1

NOTES

1 CONTRACTOR SHALL OBTAIN 200 AMP, 1 PHASE, 120/240 VOLT UNDERGROUND SERVICE TO THE CONTROLLER FROM THE UTILITY.

CONDUIT AND ELECTRICAL WIRE SCHEDULE (CONTROLLER #1)

ROUTE		CONDUIT RIGID NONMETALLIC SCHEDULE 40					ELECTRICAL WIRE LIGHTING								NOTES
		LENGTH	2-INCH (652.0225)		3-INCH (652.0235)		LENGTH	6 AWG (655.0625)		4 AWG (655.0630)		2 AWG (655.0635)			
FROM	TO	(LF)	NO.	TOTAL (LF)	NO.	TOTAL (LF)	(LF)	NO.	TOTAL (LF)	NO.	TOTAL (LF)	NO.	TOTAL (LF)		
9+08 (42LT)	9+08 (40RT)	82			1	82									1
CIRCUIT 1A															
CONTROLLER #1	PB1-1	25	1	25	2	50	25	3	75	3	75				
PB1-1	PB1-2	40			2	80	40	3	120	3	120				
PB1-2	PB1-3	40			2	80	40	3	120	3	120				
PB1-2	PB1-4	57	1	57			57	3	171	3	171				
PB1-4	LIGHT 1-3	7	1	7			7	3	21	3	21				
LIGHT 1-3	PB1-4	7					7	3	21	3	21				
PB1-4	LIGHT 1-5	136	1	136			136	3	408	3	408				
LIGHT 1-5	LIGHT 1-7	143	1	143			143	3	429	3	429				
LIGHT 1-7	LIGHT 1-9	143	1	143			143	3	429	3	429				
LIGHT 1-9	LIGHT 1-11	143	1	143			143	3	429	3	429				
LIGHT 1-11	PB1-5	137	1	137			137	3	411	3	411				
PB1-5	LIGHT 1-13	6	1	6			6	3	18	3	18				
LIGHT 1-13	PB1-5	6					6	3	18	3	18				
PB1-5	PB1-6	58	1	58			58	3	174	3	174				
PB1-6	PB1-7	36	2	72			36	3	108	3	108				
PB1-7	PB1-8	38	2	76			38	3	114	3	114				
PB1-8	PB1-9	53	1	53			53	3	159	3	159				
PB1-9	LIGHT 1-15	7	1	7			7	3	21	3	21				
LIGHT 1-15	PB1-9	7					7	3	21	3	21				
PB1-9	LIGHT 1-17	146	1	146			146	3	438	3	438				
LIGHT 1-17	LIGHT 1-19	123	1	123			123	3	369	2	246				
CIRCUIT 1B															
CONTROLLER #1	PB1-10	25			3	75	25	3	75			3	75		
PB1-10	LIGHT 1-1	7	1	7			7	3	21			3	21		
LIGHT 1-1	PB1-10	7					7	3	21			3	21		
PB1-10	PB1-11	81			2	162	81	3	243			3	243		
PB1-11	LIGHT 1-2	10	1	10			10	3	30			3	30		
LIGHT 1-2	PB1-11	10					10	3	30			3	30		
PB1-11	PB1-12	62			2	124	62	3	186			3	186		
PB1-12	PB1-13	40	2	80			40	3	120			3	120		
PB1-13	PB1-14	40	2	80			40	3	120			3	120		
PB1-14	PB1-15	58	1	58			58	3	174			3	174		
PB1-15	LIGHT 1-4	7	1	7			7	3	21			3	21		
LIGHT 1-4	PB1-15	7					7	3	21	3	21				
PB1-15	LIGHT 1-6	136	1	136			136	3	408	3	408				
LIGHT 1-6	LIGHT 1-8	143	1	143			143	3	429	3	429				
LIGHT 1-8	LIGHT 1-10	143	1	143			143	3	429	3	429				
LIGHT 1-10	LIGHT 1-12	143	1	143			143	3	429	3	429				
LIGHT 1-12	PB1-16	137	1	137			137	3	411	3	411				
PB1-16	LIGHT 1-14	6	1	6			6	3	18	3	18				
LIGHT 1-14	PB1-16	6					6	3	18	3	18				
PB1-16	PB1-17	57	1	57			57	3	171	3	171				
PB1-17	PB1-18	40			2	80	40	3	120	3	120				
PB1-18	PB1-19	40			2	80	40	3	120	3	120				
PB1-19	PB1-20	57	1	57			57	3	171	3	171				
PB1-20	LIGHT 1-16	7	1	7			7	3	21	3	21				
LIGHT 1-16	PB1-20	7					7	3	21	3	21				
PB1-20	LIGHT 1-18	146					146	3	438	3	438				
LIGHT 1-18	LIGHT 1-20	123	1	123			123	3	369	2	246				
TOTALS				2,526		813			8,709		7,422		1,041		

NOTES

1 THIS CONDUIT SHALL BE USED FOR UTILITY SERVICE CONDUCTORS.

LIGHTING BASES, POLES, LUMINAIRE ARMS & LUMINIARES (CONTROLLER #1)

LIGHT NO.	LOCATION STATION	LOCATION OFFSET	CONCRETE BASES TYPE 2 654.0102	CONCRETE BASES TYPE 6 654.0106	TRANSFORMER BASES STANDARD 11 1/2-INCH BOLT CIRCLE 657.0205	POLES TYPE 6M 35-FOOT (SPECIAL) SPV.0060.03	LUMINAIRES SPECIAL HPS 150W SPV.0060.01	LUMINAIRE ARMS SINGLE MEMBER 4 1/2-INCH CLAMP 6-FOOT 657.0610	ELECTRICAL WIRE LIGHTING 12 AWG 655.0610
1-1	9+26	43.0LT	1		1	1	1	1	125
1-2	9+26	38.0RT	1		1	1	1	1	125
1-3	10+74	43.0LT	1		1	1	1	1	125
1-4	10+74	38.0RT	1		1	1	1	1	125
1-5	12+16	43.0LT		1	1	1	1	1	125
1-6	12+16	38.0RT		1	1	1	1	1	125
1-7	13+59	43.0LT		1	1	1	1	1	125
1-8	13+59	38.0RT		1	1	1	1	1	125
1-9	15+02	43.0LT		1	1	1	1	1	125
1-10	15+02	38.0RT		1	1	1	1	1	125
1-11	16+45	43.0LT		1	1	1	1	1	125
1-12	16+45	38.0RT		1	1	1	1	1	125
1-13	17+88	43.0LT	1		1	1	1	1	125
1-14	17+88	38.0RT	1		1	1	1	1	125
1-15	19+32	43.0LT	1		1	1	1	1	125
1-16	19+32	38.0RT	1		1	1	1	1	125
1-17	20+85	43.0LT		1	1	1	1	1	125
1-18	20+85	38.0RT		1	1	1	1	1	125
1-19	22+09	43.0LT		1	1	1	1	1	125
1-20	22+09	38.0RT		1	1	1	1	1	125
TOTALS			8	12	20	20	20	20	2,500

PULL BOXES STEEL (CONTROLLER #1)

NO.	LOCATION STATION	LOCATION OFFSET	SIZE 24X36-INCH 653.0135	NOTES
PB1-1	9+56	73.0LT	1	
PB1-2	10+00	75.0LT	1	
PB1-3	10+38	76.0LT	1	
PB1-4	10+80	43.0LT	1	
PB1-5	17+81	43.0LT	1	
PB1-6	18+23	83.0LT	1	
PB1-7	18+60	82.0LT	1	
PB1-8	18+98	82.0LT	1	
PB1-9	19+39	43.0LT	1	
PB1-10	9+19	43.0LT	1	
PB1-11	9+19	38.0RT	1	
PB1-12	9+63	81.0RT	1	
PB1-13	10+00	80.0RT	1	
PB1-14	10+40	80.0RT	1	
PB1-15	10+80	38.0RT	1	
PB1-16	17+81	38.0RT	1	
PB1-17	18+20	80.0RT	1	
PB1-18	18+60	80.0RT	1	
PB1-19	19+00	80.0RT	1	
PB1-20	19+39	38.0RT	1	
TOTALS			20	

NOTES

3

LEVELS ON - 1,2,3,4,5,6,7,8,9,10,11,12,13,14,15,16,17,18,19,20,21,22,23,24,25,26,27,28,29,30,31,32,33,34,35,36,37,38,39,40,41,42,43,44,45,46,47,48,49,50,51,52,53,54,55,56,57,59,60,63

CONDUIT AND ELECTRICAL WIRE SCHEDULE (CONTROLLER #2)

ROUTE		CONDUIT RIGID NONMETALLIC SCHEDULE 40					ELECTRICAL WIRE LIGHTING							
		LENGTH	2-INCH (652.0225)		3-INCH (652.0235)		LENGTH	6 AWG (655.0625)		4 AWG (655.0630)		2 AWG (655.0635)		
FROM	TO	(LF)	NO.	TOTAL (LF)	NO.	TOTAL (LF)	(LF)	NO.	TOTAL (LF)	NO.	TOTAL (LF)	NO.	TOTAL (LF)	NOTES
199+25 (85.5RT)	198+39 (90.5RT)	88			1									1
197+70 (54.0LT)	197+70 (39.0RT)	93			1									1
CIRCUITS 1&2														
CONTROLLER #2	PB2-1	7	1	7	5	35	7					5	35	
PB2-1	PB2-2	25			2	50	25					5	125	
PB2-2	PB2-3	90			2	180	90					5	450	
PB2-2	PB2-4	80			2	160	80					5	400	
PB2-4	PB2-5	83	2	166			83					5	415	
PB2-5	LIGHT 1-1	55	1	55			55					5	275	
LIGHT 1-1	LIGHT 2-3	178	1	178			178					5	890	
LIGHT 2-3	LIGHT 1-5	200	1	200			200					5	1,000	
LIGHT 1-5	LIGHT 2-7	200	1	200			200					5	1,000	
CIRCUITS 3&4														
CONTROLLER #2	PB2-1	7					7					5	35	
PB2-1	PB2-2	25					25					5	125	
PB2-2	PB2-3	90					90					5	450	
PB2-2	PB2-4	80					80					5	400	
PB2-4	LIGHT 3-2	147	1	147			147					5	735	
LIGHT 3-2	LIGHT 4-4	198	1	198			198					5	990	
LIGHT 4-4	LIGHT 3-6	200	1	200			200					5	1,000	
CIRCUIT 5A														
CONTROLLER #2	PB2-1	7					7			3	21			
PB2-1	PB2-6	37			2	74	37			3	111			
PB2-6	LIGHT 5-1	79	1	79			79			3	237			
LIGHT 5-1	LIGHT 5-3	200	1	200			200			3	600			
LIGHT 5-3	LIGHT 5-5	200	1	200			200			3	600			
CIRCUIT 5B														
CONTROLLER #2	PB2-1	7					7			3	21			
PB2-1	PB2-6	37					37			3	111			
PB2-6	PB2-7	83			2	166	83			3	249			
PB2-7	LIGHT 5-2	176	1	176			176			3	528			
LIGHT 5-2	LIGHT 5-4	200	1	200			200			3	600			
LIGHT 5-4	LIGHT 5-6	197	1	197			197			3	591			
CIRCUIT 6														
CONTROLLER #2	PB2-1	7					7					9	63	
PB2-1	PB2-6	37					37					9	333	
PB2-6	PB2-7	83					83					9	747	
PB2-7	PB2-8	87	1	87			87					9	783	
PB2-8	LIGHT 6-1	9	1	9			9					6	54	
CIRCUIT 6A														
LIGHT 6-1	LIGHT 6-3	116	1	116			116	3	348			3	348	
LIGHT 6-3	LIGHT 6-5	116	1	116			116	3	348			3	348	
LIGHT 6-5	LIGHT 6-7	116	1	116			116	3	348			3	348	
LIGHT 6-7	LIGHT 6-9	150	1	150			150	3	450			3	450	
LIGHT 6-9	LIGHT 6-11	150	1	150			150	3	450	3	450			
LIGHT 6-11	PB2-9	140	1	140			140	3	420	3	420			
PB2-9	LIGHT 6-13	7	1	7			7	3	21	3	21			
LIGHT 6-13	PB2-9	7					7	3	21	3	21			
PB2-9	PB2-10	58	1	58			58	3	174	3	174			
PB2-10	PB2-11	39	2	78			39	3	117	3	117			
PB2-11	PB2-12	40	2	80			40	3	120	3	120			
PB2-12	PB2-13	53	1	53			53	3	159	3	159			
PB2-13	LIGHT 6-15	6	1	6			6	3	18	3	18			
LIGHT 6-15	PB2-13	6					6	3	18	3	18			
PB2-13	LIGHT 6-17	115	1	115			115	3	345	3	345			
LIGHT 6-17	LIGHT 6-19	121	1	121			121	3	363	3	363			
LIGHT 6-19	LIGHT 6-21	121	1	121			121	3	363	2	242			
CIRCUIT 6B														
LIGHT 6-1	PB2-8	9					9	3	27					
PB2-8	PB2-14	81	2	162			81	3	243			3	243	
PB2-14	LIGHT 6-2	121	1	121			121	3	363			3	363	
LIGHT 6-2	LIGHT 6-4	116	1	116			116	3	348			3	348	
LIGHT 6-4	LIGHT 6-6	116	1	116			116	3	348			3	348	
LIGHT 6-6	LIGHT 6-8	150	1	150			150	3	450			3	450	
LIGHT 6-8	LIGHT 6-10	150	1	150			150	3	450	3	450			
LIGHT 6-10	PB2-15	140	1	140			140	3	420	3	420			
PB2-15	LIGHT 6-12	7	1	7			7	3	21	3	21			
LIGHT 6-12	PB2-15	7					7	3	21	3	21			
PB2-15	PB2-16	57	1	57			57	3	171	3	171			
PB2-16	PB2-17	40	2	80			40	3	120	3	120			
PB2-17	PB2-18	40	2	80			40	3	120	3	120			
PB2-18	PB2-19	57	1	57			57	3	171	3	171			
PB2-19	LIGHT 6-14	7	1	7			7	3	21	3	21			
LIGHT 6-14	PB2-19	7					7	3	21	3	21			
PB2-19	LIGHT 6-16	115	1	115			115	3	345	3	345			
LIGHT 6-16	LIGHT 6-18	121	1	121			121	3	363	3	363			
LIGHT 6-18	LIGHT 6-20	121	1	121			121	3	363	2	242			
TOTALS				5,526		665			8,469		8,623		13,551	

NOTES

1 THIS CONDUIT SHALL BE USED FOR UTILITY SERVICE CONDUCTORS.

3

LEVELS ON - 1,2,3,4,5,6,7,8,9,10,11,12,13,14,15,16,17,18,19,20,21,22,23,24,25,26,27,28,29,30,31,32,33,34,35,36,37,38,39,40,41,42,43,44,45,46,47,48,49,50,51,52,53,54,55,56,57,59,60,63

STATE PROJECT NUMBER: 6999-10-75	HWY: WESTON AVENUE	COUNTY: MARATHON	MISCELLANEOUS QUANTITIES	SCALE, NONE	SHEET NO: 116	E

FILE NAME :

LIGHTING BASES, POLES, LUMINAIRE ARMS & LUMINIARES (CONTROLLER #2 & SIGNAL CONTROLLER)

LIGHT NO.	LOCATION STATION	LOCATION OFFSET	CONCRETE BASES TYPE 2 654.0102	CONCRETE BASES TYPE 6 654.0106	TRANSFORMER BASES STANDARD 11 1/2-INCH BOLT CIRCLE 657.0205	POLES TYPE 6M 35-FOOT (SPECIAL) SPV.0060.03	POLES TYPE 6 35-FOOT (STANDARD) 657.0325	LUMINAIRES SPECIAL HPS 150W SPV.0060.01	LUMINAIRE ARMS SINGLE MEMBER 4 1/2-INCH CLAMP 6-FOOT 657.0610	ELECTRICAL WIRE LIGHTING 12 AWG 655.0610	CABLE TRAFFIC SIGNAL 3-12 AWG 655.0205	NOTES
1-1	197+21	41.5LT		1	1		1	1	1	125		
1-5	193+41	41.5LT		1	1		1	1	1	125		
2-3	195+41	41.5LT		1	1		1	1	1	125		
2-7	191+41	41.5LT		1	1		1	1	1	125		
3-2	196+31	41.5RT		1	1		1	1	1	125		
3-6	192+33	41.5RT		1	1		1	1	1	125		
4-4	194+33	41.5RT		1	1		1	1	1	125		
5-1	200+46	41.5RT		1	1		1	1	1	125		
5-2	201+46	41.5LT		1	1		1	1	1	125		
5-3	202+46	41.5RT		1	1		1	1	1	125		
5-4	203+46	41.5LT		1	1		1	1	1	125		
5-5	204+46	41.5RT		1	1		1	1	1	125		
5-6	205+46	41.5LT		1	1		1	1	1	125		
6-1	36+48	43.0LT		1	1		1	1	1	125		
6-2	35+32	38.0RT		1	1	1		1	1	125		
6-3	35+32	43.0LT		1	1	1		1	1	125		
6-4	34+16	38.0RT		1	1	1		1	1	125		
6-5	34+16	43.0LT		1	1	1		1	1	125		
6-6	33+00	38.0RT		1	1	1		1	1	125		
6-7	33+00	43.0LT		1	1	1		1	1	125		
6-8	31+50	38.0RT		1	1	1		1	1	125		
6-9	31+50	43.0LT		1	1	1		1	1	125		
6-10	30+00	38.0RT		1	1	1		1	1	125		
6-11	30+00	43.0LT		1	1	1		1	1	125		
6-12	28+53	38.0RT	1		1	1		1	1	125		
6-13	28+53	43.0LT	1		1	1		1	1	125		
6-14	27+09	38.0RT	1		1	1		1	1	125		
6-15	27+09	43.0LT	1		1	1		1	1	125		
6-16	25+88	38.0RT		1	1	1		1	1	125		
6-17	25+88	43.0LT		1	1	1		1	1	125		
6-18	24+68	38.0RT		1	1	1		1	1	125		
6-19	24+68	43.0LT		1	1	1		1	1	125		
6-20	23+47	38.0RT		1	1	1		1	1	125		
6-21	23+47	43.0LT		1	1	1		1	1	125		
S-1-1	198+11.5	46.5RT						1	1		200	1,2
S-1-2	199+27	61.0RT						1	1		85	1,2
S-1-3	199+43	41.5LT						1	1		170	1,2
S-1-4	36+68	38.0RT						1	1		220	1,2
TOTALS			4	30	34	20	14	38	38	4,250	675	

NOTES

1 LUMINAIRE ARM AND LUMINAIRE SHALL BE MOUNTED ON TRAFFIC SIGNAL POLE PROVIDED BY SIGNAL CONTRACTOR.

2 LUMINAIRES SHALL BE WIRED FROM SIGNAL CONTROLLER USING TRAFFIC SIGNAL CABLE (3-12 AWG) ROUTED THROUGH THE TRAFFIC SIGNAL CONDUIT AND BOX SYSTEM.

PULL BOXES STEEL (CONTROLLER #2)

NO.	LOCATION STATION	LOCATION OFFSET	SIZE 24X36-INCH 653.0135	SIZE 24X48-INCH 653.0145	NOTES
PB2-1	199+48	72.0RT		1	
PB2-2	199+23	80.0RT	1		
PB2-3	198+37	86.5RT	1		
PB2-4	197+77	41.5RT	1		
PB2-5	197+77	41.5LT	1		
PB2-6	199+68	41.5RT	1		
PB2-7	199+68	41.5LT	1		
PB2-8	36+57	43.0LT	1		
PB2-9	28+61	43.0LT	1		
PB2-10	28+19	80.0LT	1		
PB2-11	27+80	80.0LT	1		
PB2-12	27+40	80.0RT	1		
PB2-13	27+03	43.0LT	1		
PB2-14	36+53	38.0RT	1		
PB2-15	28+60	38.0RT	1		
PB2-16	28+21	80.0RT	1		
PB2-17	27+81	80.0RT	1		
PB2-18	27+41	80.0RT	1		
PB2-19	27+03	38.0RT	1		
TOTALS			18	1	

NOTES

3

LEVELS ON = 1,2,3,4,5,6,7,8,9,10,11,12,13,14,15,16,17,18,19,20,21,22,23,24,25,26,27,28,29,30,31,32,33,34,35,36,37,38,39,40,41,42,43,44,45,46,47,48,49,50,51,52,53,54,55,56,57,58,59,60,63

STATE PROJECT NUMBER: 6999-10-75	HWY: WESTON AVENUE	COUNTY: MARATHON	MISCELLANEOUS QUANTITIES	SCALE, NONE	SHEET NO: 117	E

FILE NAME :

3

RECAP OF QUANTITIES (CONTROLLERS #1 & #2)

ITEM NUMBER	DESCRIPTION	CATEGORY QUANTITY	UNIT
	STANDARD ITEMS		
652.0225	CONDUIT RIGID NONMETALLIC SCHEDULE 40 2-INCH	8,052	LF
652.0235	CONDUIT RIGID NONMETALLIC SCHEDULE 40 3-INCH	1,478	LF
653.0135	PULL BOXES STEEL 24X36-INCH	38	EACH
653.0145	PULL BOXES STEEL 24X48-INCH	1	EACH
654.0102	CONCRETE BASES TYPE 2	12	EACH
654.0106	CONCRETE BASES TYPE 6	42	EACH
654.0217	CONCRETE CONTROL CABINET BASES TYPE 9 SPECIAL	2	EACH
655.0205	CABLE TRAFFIC SIGNAL 3-12 AWG	675	LF
655.0610	ELECTRICAL WIRE LIGHTING 12 AWG	6,750	LF
655.0625	ELECTRICAL WIRE LIGHTING 6 AWG	17,178	LF
655.0630	ELECTRICAL WIRE LIGHTING 4 AWG	16,045	LF
655.0635	ELECTRICAL WIRE LIGHTING 2 AWG	14,592	LF
657.0205	TRANSFORMER BASES STANDARD 11 1/2-INCH BOLT CIRCLE	54	EACH
657.0325	POLES TYPE 6	14	EACH
657.0610	LUMINAIRE ARMS SINGLE MEMBER 4 1/2-INCH CLAMP 6-FOOT	58	EACH
	SPECIAL ITEMS		
SPV.0060.04	LIGHTING CONTROLLERS	2	EACH
SPV.0060.03	POLES TYPE 6M	40	EACH
SPV.0060.01	LUMINAIRES SPECIAL HPS 150 WATTS	58	EACH

DETAILED QUANTITY BREAKDOWN SHOWN ELSEWHERE.

STATE PROJECT NUMBER: 6999-10-75	HWY: WESTON AVENUE	COUNTY: MARATHON	MISCELLANEOUS QUANTITIES	SCALE, NONE	SHEET NO: 118	E

LEVELS ON - 1,2,3,4,5,6,7,8,9,10,11,12,13,14,15,16,17,18,19,20,21,22,23,24,25,26,27,28,29,30,31,32,33,34,35,36,37,38,39,40,41,42,43,44,45,46,47,48,49,50,51,52,53,54,55,56,57,58,59,60,63

FILE NAME :

WISDOT/CADDS SHEET 42

CONDUIT

LOCATION	CONDUIT RIGID NONMETALLIC SCHEDULE 40 652.0225 2-INCH L.F.	652.0235 3-INCH L.F.	CONSTRUCTION METHOD
CB1-PB1	20	40	TRENCH
PB1-SB1	15	---	TRENCH
PB1-PB2	170	---	TRENCH
PB1-PB3	---	100	TRENCH
PB3-SB2	5	---	TRENCH
PB3-PB4	---	70	TRENCH
PB4-SB3	5	---	TRENCH
PB4-PB5	---	90	TRENCH
PB5-SB4	5	---	TRENCH
PB5-PB6	230	---	TRENCH
PB5-PB7	---	110	TRENCH
PB7-SB5	10	---	TRENCH
PB7-PB8	---	100	TRENCH
PB8-SB6	25	---	TRENCH
PB8-PB9	---	90	TRENCH
PB9-SB7	10	---	TRENCH
PB9-PB10	165	---	TRENCH
PB9-PB11	---	90	TRENCH
PB11-SB8	15	---	TRENCH
PB11-PB12	---	70	TRENCH
PB12-SB9	5	---	TRENCH
PB12-PB13	---	140	TRENCH
PB13-SB10	10	---	TRENCH
PB13-PB14	205	---	TRENCH
PB13-PB15	---	90	TRENCH
PB15-SB11	10	---	TRENCH
PB15-PB16	---	80	TRENCH
PB16-SB12	10	---	TRENCH
PB16-CB1	---	75	TRENCH
PB14-PB17	220	---	TRENCH
PB17-PB18	220	---	TRENCH
PB18-EXPB1	225	---	TRENCH
EXPB2-PB19	300	---	TRENCH
PB19-PB20	290	---	TRENCH
PB20-PB21	290	---	TRENCH
PB21-EXPB3	270	---	TRENCH
EXPB10-PB22	220	---	TRENCH
PB22-PB23	220	---	TRENCH
PB23-EXPB11	210	---	TRENCH
TOTALS	3380	1145	

TRAFFIC DETECTOR LOOPS

STATION*	OFFSET*	LOOP NO.	SIZE	NO. TURNS	DISTANCE FROM PULL BOX	652.0800 CONDUIT LOOP DETECTOR LF	655.0700 LOOP DETECTOR LEAD IN CABLE LF	655.0800 LOOP DETECTOR WIRE LF
197+80	03 RT	FUT.11	6 X 20	3	25	102	220	321
198+08	03 RT	FUT.12	6 X 20	3	5	62	220	195
201+63	21 LT	21	6 X 20	3	6	64	330	202
34+95	18 RT	41	6 X 18	3	5	58	480	183
36+51	03 RT	42	6 X 20	3	11	74	230	233
36+79	03 RT	43	6 X 20	3	6	64	230	202
36+51	14 RT	44	6 X 20	3	18	88	230	277
36+79	14 RT	45	6 X 20	3	16	84	230	265
36+51	25 RT	46	6 X 20	3	10	72	275	227
36+79	25 RT	47	6 X 20	3	9	70	275	221
199+59	03 LT	FUT.51	6 X 20	3	5	62	80	195
199+31	03 LT	FUT.52	6 X 20	3	5	62	80	195
195+78	21 RT	61	6 X 20	3	7	66	395	208
40+00	10 LT	81	6 X 14	3	10	60	205	189
38+42	08 LT	82	6 X 20	3	10	72	85	227
38+14	08 LT	83	6 X 20	3	5	62	85	195
38+42	19 LT	84	6 X 20	3	26	104	35	328
38+14	19 LT	85	6 X 20	3	25	102	35	321
38+42	30 LT	86	6 X 20	3	17	86	35	271
38+14	30 LT	87	6 X 20	3	13	78	35	246
					TOTALS	1492	3790	4700

* FINAL LOCATION TO BE DETERMINED BY ENGINEER IN THE FIELD

3

PULL BOXES

STATION*	LOCATION*	PB NO.	653.0135 PULLBOXES STEEL 24x36-INCH EACH	653.0140 PULLBOXES STEEL 24x42-INCH EACH
199+21	74 RT	PB1	-	1
40+00	29 LT	PB2	1	-
38+33	02 RT	PB3	-	1
198+38	81 RT	PB4	-	1
198+08	49 RT	PB5	-	1
195+78	40 RT	PB6	1	-
198+05	05 LT	PB7	-	1
198+03	55 LT	PB8	-	1
36+57	37 RT	PB9	-	1
34+95	35 RT	PB10	1	-
36+61	07 LT	PB11	-	1
36+65	42 LT	PB12	-	1
199+54	41 LT	PB13	-	1
201+62	39 LT	PB14	1	-
199+55	05 RT	PB15	-	1
199+56	42 RT	PB16	-	1
203+83	40 LT	PB17	1	-
206+03	40 LT	PB18	1	-
ADJACENT TO SHOULDER		PB19	1	-
ADJACENT TO SHOULDER		PB20	1	-
ADJACENT TO SHOULDER		PB21	1	-
ADJACENT TO SHOULDER		PB22	1	-
ADJACENT TO SHOULDER		PB23	1	-
		TOTAL	11	12

* FINAL LOCATION TO BE DETERMINED BY ENGINEER IN THE FIELD

CONCRETE BASES

STATION*	OFFSET*	SB NO.	654.0101 TYPE 1 EACH	654.0102 TYPE 2 EACH	654.0215 CONTROL CABINET TYPE 9 EACH
199+41	66 RT	CB1	---	---	1
199+27	61 RT	SB1	1	---	---
38+28	01 RT	SB2	1	---	---
38+28	38 RT	SB3	---	1	---
198+11	46 RT	SB4	1	---	---
197+96	05 LT	SB5	1	---	---
197+84	41 LT	SB6	---	1	---
36+68	38 RT	SB7	1	---	---
36+75	07 LT	SB8	1	---	---
36+72	43 LT	SB9	---	1	---
199+43	41 LT	SB10	1	---	---
199+44	05 RT	SB11	1	---	---
199+47	46 RT	SB12	---	1	---
		TOTALS	8	4	1

* FINAL LOCATION TO BE DETERMINED BY ENGINEER IN THE FIELD

GROUNDING CONDUCTORS

LOCATION	ELECTRICAL WIRE TRAFFIC SIGNALS 10 AWG 655.0515 (GREEN) L.F.	REMARKS
CB1-SB1	45	
SB1-SB2	85	
SB2-SB3	60	
SB3-SB4	65	
SB4-SB5	80	
SB5-SB6	95	
SB6-SB7	90	
SB7-SB8	80	
SB8-SB9	65	
SB9-SB10	95	
SB10-SB11	75	
SB11-SB12	70	
SB12-CB1	45	
CB1-PB1	45	PB BONDING JUMPERS
SB2-PB3	20	PB BONDING JUMPERS
SB3-PB4	15	PB BONDING JUMPERS
SB4-PB5	15	PB BONDING JUMPERS
SB5-PB7	20	PB BONDING JUMPERS
SB6-PB8	35	PB BONDING JUMPERS
SB7-PB9	20	PB BONDING JUMPERS
SB8-PB11	25	PB BONDING JUMPERS
SB9-PB12	15	PB BONDING JUMPERS
SB10-PB13	20	PB BONDING JUMPERS
SB11-PB15	20	PB BONDING JUMPERS
CB1-PB16	45	PB BONDING JUMPERS
TOTAL	1245	

3

STATE PROJECT NO: 6999-10-75	HWY: CTH X	COUNTY: MARATHON	MISCELLANEOUS QUANTITIES	SHEET NO: 120	E

FILE NAME : _____ PLOT DATE : _____ PLOT BY : _____ PLOT NAME : _____ ORG DATE : _____ ORIGINATOR : DIST _ PLOT SCALE : 1:1

CABLE TRAFFIC SIGNAL

LOCATION	655.0260 12-14 AWG L.F.
CB1-SB1	50
CB1-SB2	95
CB1-SB3	125
CB1-SB4	170
CB1-SB5	230
CB1-SB6	295
CB1-SB7	285
CB1-SB8	245
CB1-SB9	200
CB1-SB10	135
CB1-SB11	90
CB1-SB12	50
TOTALS	1970

LUMP SUM ITEMS

ITEM NUMBER	DESCRIPTION	QUANTITY
651.3050.S	TRAFFIC SIGNAL CONTROLLER, FULLY ACTUATED, 8-PHASE	1 LS
656.0200	ELECTRICAL SERVICE METER BREAKER PEDESTAL, INTERSECTION OF CTH X & WESTON AVENUE	1 LS
658.5069	SIGNAL MOUNTING HARDWARE, INTERSECTION OF CTH X & WESTON AVENUE	1 LS

3

SIGNAL BASES, POLES, MAST ARMS, AND LUMINAIRES

SB NO.	657.0100 PEDESTAL BASES EACH	657.0255 TRANSFORMER BASES STANDARD 11 1/2 INCH BOLT CIRCLE EACH	657.0395.S POLES, TYPE 2 EACH	657.0315 POLES, TYPE 4 EACH	657.0425 TRAFFIC SIGNAL STANDARD, ALUMINUM 15-FOOT EACH	657.0595.S TROMBONE ARMS 15-F00T EACH	658.0500 PEDESTRIAN PUSH BUTTONS EACH
SB1	---	1	---	1	---	---	2
SB2	1	---	---	---	1	---	---
SB3	---	1	1	---	---	1	2
SB4	---	1	---	1	---	---	---
SB5	1	---	---	---	1	---	---
SB6	---	1	1	---	---	1	1
SB7	---	1	---	1	---	---	1
SB8	1	---	---	---	1	---	---
SB9	---	1	1	---	---	1	1
SB10	---	1	---	1	---	---	1
SB11	1	---	---	---	1	---	---
SB12	---	1	1	---	---	1	---
TOTALS	4	8	4	4	4	4	8

INTERCONNECT

LOCATION	655.0410 COMMUNICATIONS CABLE INSTALLED IN CONDUIT L.F.
CB1-PB16	40
PB16-PB15	40
PB15-PB13	45
PB13-PB14	205
PB14-PB17	220
PB17-PB18	220
PB18-EXPB1	225
EXPB1-EXPB2	150
EXPB1 COIL	50
EXPB2-PB19	300
PB19-PB20	290
PB20-PB21	290
PB21-EXPB3	270
EXPB3 COIL	50
EXPB4 COIL	50
EXPB8-EXPB9	60
EXPB9-EXPB10	180
EXPB10-PB22	220
PB22-PB23	220
PB23-EXPB11	210
EXPB11-EXPB12	50
EXPB12-EXPB13	65
EXPB13 COIL	50
TOTALS	3500

TRAFFIC SIGNAL FACES

SB NO.	HEAD NO.	TYPE OF MOUNT	TRAFFIC SIGNAL FACES 658.0110 3-12 INCH VERTICAL R-Y-G EACH	TRAFFIC SIGNAL FACES 658.0155 3-12 INCH HORIZONTAL R-Y-G EACH	658.0215 BACKPLATES SIGNAL FACE 3 SECTION 12-INCH EACH	658.0412 PEDESTRIAN SIGNAL FACES, 12-INCH EACH
SB1	13	POST MOUNT, VERTICAL	1	---	1	---
	82	PEDESTRIAN MOUNT	---	---	---	1
SB2	10	POST MOUNT, VERTICAL	1	---	1	---
	16	POST MOUNT, VERTICAL	1	---	1	---
SB3	11	MAST ARM MOUNT, HORIZONTAL	---	1	1	---
	41	PEDESTRIAN MOUNT	---	---	---	1
SB4	1	POST MOUNT, VERTICAL	1	---	1	---
	62	PEDESTRIAN MOUNT	---	---	---	1
SB5	4	POST MOUNT, VERTICAL	1	---	1	---
	6	POST MOUNT, VERTICAL	1	---	1	---
SB6	7	MAST ARM MOUNT, HORIZONTAL	---	1	1	---
	21	PEDESTRIAN MOUNT	---	---	---	1
SB7	9	POST MOUNT, VERTICAL	1	---	1	---
	42	PEDESTRIAN MOUNT	---	---	---	1
SB8	12	POST MOUNT, VERTICAL	1	---	1	---
	14	POST MOUNT, VERTICAL	1	---	1	---
SB9	15	MAST ARM MOUNT, HORIZONTAL	---	1	1	---
	81	PEDESTRIAN MOUNT	---	---	---	1
SB10	5	POST MOUNT, VERTICAL	1	---	1	---
	22	PEDESTRIAN MOUNT	---	---	---	1
SB11	2	POST MOUNT, VERTICAL	1	---	1	---
	8	POST MOUNT, VERTICAL	1	---	1	---
SB12	3	MAST ARM MOUNT, HORIZONTAL	---	1	1	---
	61	PEDESTRIAN MOUNT	---	---	---	1
		TOTALS	12	4	16	8

CONVENTIONAL SIGNS AND ABBREVIATIONS

TOWN OR RANGE LINE
SECTION LINE
QUARTER LINE
SIXTEENTH LINE
NEW REFERENCE LINE
NEW R/W LINE
EXISTING R/W LINE
PROPERTY LINE — P.L.
CORPORATE LIMITS — NAME
LOT, TIE AND OTHER MINOR LINES
SLOPE INTERCEPT
UNDERGROUND FACILITY (GAS, TELEPHONE, ELEC. FIBER OPTIC, ETC.) — E (TYPE)
FENCE — x — x
T.I. LIMITS
RAILROAD
FOUNDATION — FND.
BUILDING — TYPE
CEMETARY

SERVICE PEDESTAL
FOUND IRON PIPE — IP
R/W MONUMENT
VALVE — GAS (TYPE)
SILO, MANHOLE, VENT SEPTIC VENT, WELL, ETC. — M.H.(TYPE)
BUSH
TREES (DECIDUOUS)
TREES (CONIFEROUS)
WOODS
HAZARDOUS UTILITY SITE — CAUTION
SECTION CORNER — T5N 5 4 8 9 R9E

	COMPENSABLE	NON-COMPENSABLE
POWER POLE	■	□
TELEPHONE POLE	⌀	⌀
SIGN	▮	▯

NO ACCESS (By Statutory Authority)
NO ACCESS (By Acquisition)
NO ACCESS (By Previous Acquistion)

AC.	ACRE
AH.	AHEAD
ALUM. MON.	ALUMINUM MONUMENT
ANT.	ANTENNA
A.P.	ACCESS POINT
B.	BARN
BK.	BACK
B.M.	BENCH MARK
C.	CHURCH
C./L.	CENTERLINE
CONC. MON.	CONCRETE MONUMENT
CONST.	CONSTRUCTION
C.P.	CULVERT PIPE
C.S.M.	CERTIFIED SURVEY MAP
D.	DEGREE OF CURVE
ETAL.	AND OTHERS
FRL.	FRACTIONAL
G.	GARAGE
H.	HOUSE
L.	LENGTH OF CURVE
L.C.	LONG CHORD OF CURVE
L.C.B.	LONG CHORD BEARING
Lt.	LEFT
MI.	MILE

P.	PAGE
P.C.	POINT OF CURVATURE
P.E.	PRIVATE ENTRANCE
PERM.	PERMANENT
P.I.	POINT OF INTERSECTION
P.T.	POINT OF TANGENCY
P.L.E.	PERMANENT LIMITED EASEMENT
R.	RADIUS
R.D.E.	RESTRICTED DEVELOPMENT EASEMENT
REM.	REMAINING
REST.	RESTAURANT
Rt.	RIGHT
R/W	RIGHT OF WAY
S.	SHED
S.D.	STORM DRAINAGE
S.F.	SQUARE FEET
STA.	STATION
T.	TANK
TAV.	TAVERN
TEMP.	TEMPORARY
T.I.	TEMPORARY INTEREST
VOL.	VOLUME
W	WALL

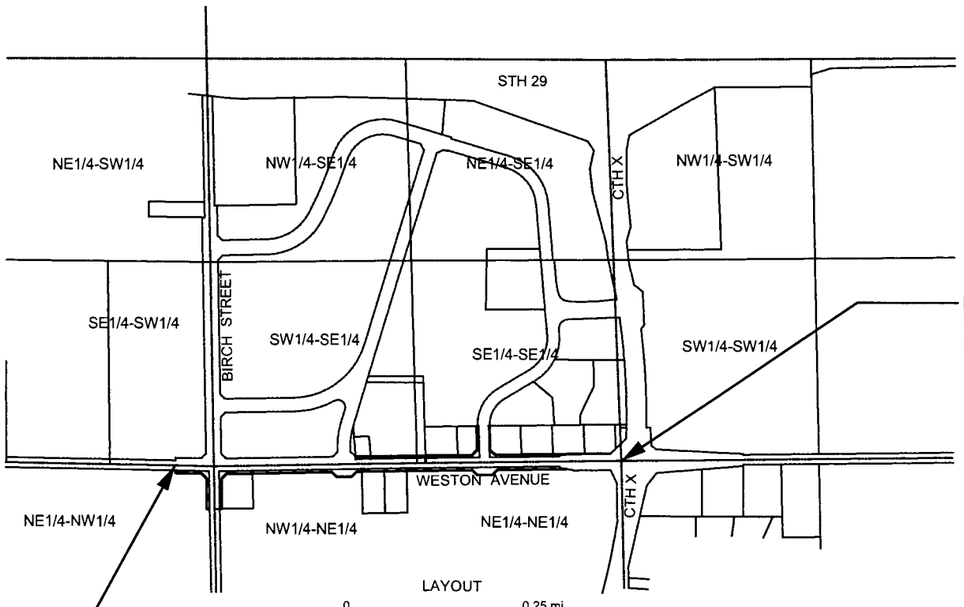

BEGIN RELOCATION ORDER
WESTON AVENUE
STA. 7+50.00

END RELOCATION ORDER
WESTON AVENUE
STA. 36+76.77

NET LENGTH OF CENTERLINE = 0.55 mi URBAN

NOTES

COORDINATES AND BEARINGS ON THIS PLAT ARE ORIENTED TO THE MARATHON COUNTY COORDINATE SYSTEM NAD 1983 (91) AND ARE GROUND BASED.

RIGHT OF WAY MONUMENTS ARE TYPE 2 AND ARE PLACED PRIOR TO OR AT THE TIME OF LAND TITLE TRANSFER.

RIGHT OF WAY BOUNDARIES ARE DEFINED WITH COURSES OF THE PERIMETER OF THE HIGHWAY LANDS REFERENCED TO THE U.S. PUBLIC LAND SURVEY OR OTHER LAND SURVEYS OF PUBLIC RECORD.

R/W PROJECT NUMBER	SHEET NUMBER	TOTAL SHEETS
FEDERAL PROJECT NUMBER	4.1	7

PLAT OF RIGHT OF WAY REQUIRED FOR

VILLAGE OF WESTON
WESTON AVENUE

APPROVED FOR
VILLAGE OF WESTON
MARATHON COUNTY, WI

BY

(Date)

ORIGINAL PLANS PREPARED BY
CENTRAL WISCONSIN ENGINEERS & ARCHITECTS, INC.

WISCONSIN
TODD G. MROCHEK
S-2260
WESTON
WI
LAND SURVEYOR

10/31/03
(Date)

Todd G. Mrochek
(Signature)

REVISION DATE
9-8-03
10-16-03
10-31-03 - ADDED P.L.E.
1-06-04 - REVISED SLOPE INTERCEPTS, REVISED 113TI

STATE OF WISCONSIN
DEPARTMENT OF TRANSPORTATION

APPROVED FOR DISTRICT OFFICE:

DATE:

123

P:\draft\32290200 weston weston-birch row\weston row WDOT.dwg, Title Sheet, 01/14/2004 07:43:17 AM

SCHEDULE OF LANDS & INTERESTS REQUIRED

AREAS SHOWN IN THE TOTAL ACRES COLUMN MAY BE APPROXIMATE AND ARE DERIVED FROM TAX ROLLS OR OTHER AVAILABLE SOURCES AND MAY NOT INCLUDE LANDS OF THE OWNER WHICH ARE NOT CONTIGUOUS TO THE AREA TO BE ACQUIRED.

PARCEL NUMBER	SHEET NUMBER	OWNER(S)	INTEREST REQUIRED	TOTAL ACRES	R/W REQUIRED AREA					TOTAL ACRES REMAINING	T.I. (SQ. FT.)	P.L.E. (SQ. FT.)
					NEW		EXISTING	TOTAL				
					ACRES	SQ. FT.		ACRES	SQ. FT.			
102	4.4	LIFE IS GOOD, LLC	FEE, ACCESS CONTROL AND T.I.	40.0 AC.	0.186 AC.	8089 SQ. FT.	-	0.186 AC.	8089 SQ. FT.	39.81 AC.	4064 SQ. FT.	
103	4.4	STEVEN S. STEHR & LOUIS F. ROURKE	FEE, ACCESS CONTROL AND T.I.	1.25 AC.	0.188 AC.	8184 SQ. FT.	-	0.188 AC.	8184 SQ. FT.	1.062 AC.	5147 SQ. FT.	
104	4.4, 4.5, 4.6	WESTVEST, LLC	FEE, ACCESS CONTROL AND T.I.	72.53 AC.	0.873 AC.	38036 SQ. FT.	-	0.873 AC.	38036 SQ. FT.	71.657 AC.	35419 SQ. FT.	
105	4.5	VENTURE OF WAUSAU, LLC	FEE, ACCESS CONTROL AND T.I.	1.980 AC.	0.115 AC.	5015 SQ. FT.	-	0.115 AC.	5015 SQ. FT.	1.865 AC.	5900 SQ. FT.	
106	4.5	MICHIGAN WISCONSIN PIPELINE COMPANY	FEE, ACCESS CONTROL AND T.I.	0.34 AC.	0.039 AC.	1700 SQ. FT.	-	0.039 AC.	1700 SQ. FT.	0.301 AC.	1000 SQ. FT.	
107	4.4-4.5	PUTNAM CAPITAL MANAGEMENT, LLC	FEE, ACCESS CONTROL AND T.I.	4.721 AC.	0.140 AC.	6096 SQ. FT.	-	0.140 AC.	6096 SQ. FT.	4.581 AC.	3594 SQ. FT.	
108	4.5	DEAN PROHASKA	FEE, ACCESS CONTROL AND T.I.	1.66 AC.	0.203 AC.	8834 SQ. FT.	-	0.203 AC.	8834 SQ. FT.	1.457 AC.	6508 SQ. FT.	
109	4.6	WESTVEST, LLC	FEE, ACCESS CONTROL AND T.I.	0.986 AC.	0.122 AC.	5315 SQ. FT.	-	0.122 AC.	5315 SQ. FT.	0.864 AC.	5412 SQ. FT.	
110	4.6	JEREMY M. KING	FEE, ACCESS CONTROL AND T.I.	0.981 AC.	0.081 AC.	3533 SQ. FT.	-	0.081 AC.	3533 SQ. FT.	0.900 AC.	2378 SQ. FT.	
111	4.6	MARK P. STASZAK, SUBJECT TO LIFE ESTATE OF MARY J. STASZAK	FEE, ACCESS CONTROL,P.L.E. & T.I.	1.808 AC.	0.033 AC.	1430 SQ. FT.	-	0.033 AC.	1430 SQ. FT.	1.775 AC.	6792 SQ. FT.	1500 SQ. FT.
112	4.7	PUTNAM CAPITAL MANAGEMENT, LLC	T.I.	2.384 AC.						2.384 AC.	4447 SQ. FT.	
113	4.7	STONE RIDGE DEVELOPMENT, LLC	T.I.	2.610 AC.						2.610 AC.	2842 SQ. FT.	
50	4.4	GENERAL TELEPHONE COMPANY	RELEASE OF RIGHTS									
51	4.4	GTE MTO, INC.	RELEASE OF RIGHTS									
52	4.4, 4.5, 4.6	GENERAL TELEPHONE COMPANY	RELEASE OF RIGHTS									
53	4.4, 4.5, 4.6	GTE NORTH	RELEASE OF RIGHTS									
54	4.5	MICHIGAN WISCONSIN PIPELINE CO.	RELEASE OF RIGHTS									
55	4.5	AMERICAN TRANSMISSION COMPANY., LLC	RELEASE OF RIGHTS									

LEVELS ON =

REVISION DATE	DATE: 3-31-03		HWY: WESTON AVE.	CONSTRUCTION PROJECT NUMBER 6999-10-75	PS&E SHEET NO: 4.2	
9-8-03, 10-16-03, 10-31-03, 1-06-04			COUNTY: MARATHON	STATE R/W PROJECT NUMBER	124	E

STH 29

NW1/4-SE1/4

NE1/4-SE1/4

NW1/4-SW1/4

NE1/4-SW1/4

SAINT CLARE BLVD.

MINISTRY PARKWAY

WESTVIEW BLVD.

SE1/4-SW1/4

SW1/4-SE1/4

SE1/4-SE1/4

SW1/4-SW1/4

STONE RIDGE DRIVE

(CAMP PHILLIPS ROAD)

BIRCH STREET

MINISTRY PARKWAY

FRANCISCAN WAY

BEGIN RELOCATION ORDER
WESTON AVENUE
7+50

107

106

107

108

109

110

111

112

113

WESTON AVENUE

END RELOCATON ORDER
WESTON AVENUE
36+76.77

NE1/4-NW1/4

102

103

104

105

104

NW1/4-NE1/4

NE1/4-NE1/4

CTH X

LEVELS ON =

REVISION DATE 9-8-03, 10-16-03, 10-31-03, 1-06-04	DATE: 3-31-03	SCALE, FEET 0 100 200 300	HWY: WESTON AVE.	CONSTRUCTION PROJECT NUMBER 6999-10-75	PS&E SHEET NO: 4.3
			COUNTY: MARATHON	STATE R/W PROJECT NUMBER	125 E

VILLAGE OF ROTHSCHILD

SE 1/4, SW 1/4
SEC. 20, T28N, R8E

S 1/4 CORNER
FOUND R.R. SPIKE
PER MON. RECORD
N - 175,703.93'
E - 293,608.55'

T 28 N
20
29
R 8 E

BIRCH STREET

SEC. LINE = ℄ N 01°12'42" W

33+00

32+00

VILLAGE OF WESTON

SW 1/4, SE 1/4
SEC. 20, T28N, R8E

52
GENERAL TELEPHONE COMPANY
VOL. 73, PG. 614
(PARCELS 106 AND 107)
VOL. 73, PG. 324 AND
VOL. 73, PG. 330
(PARCEL 108)
VOL. 73, PG. 325
(PARCEL 109)
VOL. 73, PG. 327
(PARCEL 110)
VOL. 73, PG. 326
(PARCEL 111)

53
GTE NORTH
DOC. #1196835 AND 1196840
(PARCEL 107)
DOC. #1196838 (PARCEL 108)
DOC. #1196836 (PARCEL 109)
DOC. #1196839 (PARCEL 110)
DOC. #1196837 (PARCEL 111)

LOT 1
VOL. 56 (CSM)
PAGE 83

107

PUTNAM CAPITAL MANAGEMENT, LLC

33+52.57
62.14' RT.

30+20.64
50.00' RT.

32+00
50.00' RT.

32+00
60.00' RT.

BUILDING

30+81.64
60.00' RT.

30+85.77
60.00' RT.

10+85.77
60.00' LT.

10+81.64
50.00' LT.

35.3'

1 A.P.

10' T.I.
SLOPES

EXISTING R/W

CHAIN LINK FENCE

18+14.79
98.14' LT.

18+14.79
82.00' LT.

17+78.65
60.00' LT.

17+82.79
50.00' LT.

FRANCISCAN WAY

85'

WESTON AVENUE

50'

R/W

7+48.02
50.00' LT.

7+48.02
33.00' LT.

9+14.75
50.00' LT.

2722.03'

7+00 8+00 9+00 11+00 12+00 13+00 14+00 15+00 16+00 17+00 18+00

SEC. LINE = ℄ N 88°59'10" W

SEC. LINE = ℄ N 89°02'34" E

2676.77'

722.88'

N 89°02'34" E

524.14'

S 89°02'34" W

216.34' EXISTING R/W S 88°59'10" E

SLOPE INTERCEPT

N 88°59'10" W NEW R/W 169.24'

RW8 7+51.93
33.00' RT.

N 01°00'50" E
17.00'

RW9 7+51.93
50.00' RT.

7+51.93
60.00' LT.

10' T.I.
SLOPES

RW10 9+21.17
50.00' RT.

9+17.14
60.00' RT.

29+17.14
60.00' LT.

RW11 29+21.17
50.00' LT.

51
33'X33' EASEMENT
GRANTED TO
GTE MTO, INC
PER DOC. #878051

50
GENERAL TELEPHONE COMPANY
VOL. 73, PG. 332
DOC. #607256

102

LIFE IS GOOD, LLC

NE 1/4, NW 1/4
SEC. 29, T28N, R8E

VILLAGE OF WESTON

T 28 N
19 20
30 29
R 8 E

SECTION CORNER
FALLS ON SANITARY MANHOLE
COVER. LOCATION ESTABLISHED
AS PER MON. RECORD TIES.
N - 175,703.93'
E - 293,608.55'

PI Sta 10+00
= PI 30+00

220.00'

10' T.I.
SLOPES

N 89°02'34" E

17.00'
S 01°14'30" E

EXISTING R/W

NEW R/W

170.84'

S 89°02'34" W

SHED TO BE
REMOVED

20' T.I.
SLOPES

S43°54'02"W
45.37'

1.4'
HOUSE

GARAGE

10+82.41
50.00' RT.

10+72.46
60.00' RT.

RW17

11+18.35
70.00' RT.

29+17.59
50.00' RT.

29+27.54
60.00' RT.

RW16

12+53.35
70.00' RT.

12+53.25
50.00' RT.

RW18

248.00'

29+00

28+00 = ℄ N 01°14'30" W

198.84'

N 01°14'30" W

S 01°14'30" E

200.89'

248.00'

NEW R/W

EXISTING R/W

10' T.I.
SLOPES

STEVEN S. STEHR
LOUIS F. ROURKE

103

LOT 1
VOL. 52 (CSM)
PAGE 110

P.L.
248.00'

27+18.70
60.00' RT.

27+18.75
50.00' RT.

RW15

17.00'
S 89°02'34" W

P.L.
220.00'

27+20.27
60.00' LT.

27+20.27
50.00' LT.

RW12

17.00'
S 88°45'30" W

RW13 27+20.27
33.00' LT.

5256.81'

33' 33'

27+00

33.00' RT.

RW14

T 28 N
29
32
R 8 E

FOUND R.R. SPIKE
AS PER MON. RECORD
N - 170,448.35'
E - 293,722.47'

104

WESTVEST, LLC

NW 1/4, NE 1/4
SEC. 29, T28N, R8E

VILLAGE OF WESTON

17+77.39
50.00' RT.

17+83.34
70.00' RT.

RW35

18+05.68
92.16' RT.

18+09.79
82.16' RT.

RW36

N 46°10'42" W
45.56'

10' T.I.
SLOPES

R/W COORDINATES

POINT NO.	NORTHING	EASTING
RW 8	175675.32	293359.94
RW 9	175658.32	293359.64
RW 10	175655.33	293528.85
RW 11	175624.03	293560.27
RW 12	175423.18	293564.63
RW 13	175423.55	293581.62
RW 14	175423.54	293647.64
RW 15	175423.83	293664.64
RW 16	175622.62	293660.33
RW 17	175655.31	293691.79
RW 18	175658.16	293862.60

SEE SHEET 5

LEVELS ON =

REVISION DATE	DATE: 3-31-03	SCALE, FEET	HWY: WESTON AVE.	CONSTRUCTION PROJECT NUMBER 6999-10-75	PS&E SHEET NO: 4.4	
9-8-03, 10-16-03, 10-31-03, 1-06-04		0 20 40 80	COUNTY: MARATHON	STATE R/W PROJECT NUMBER	126	E

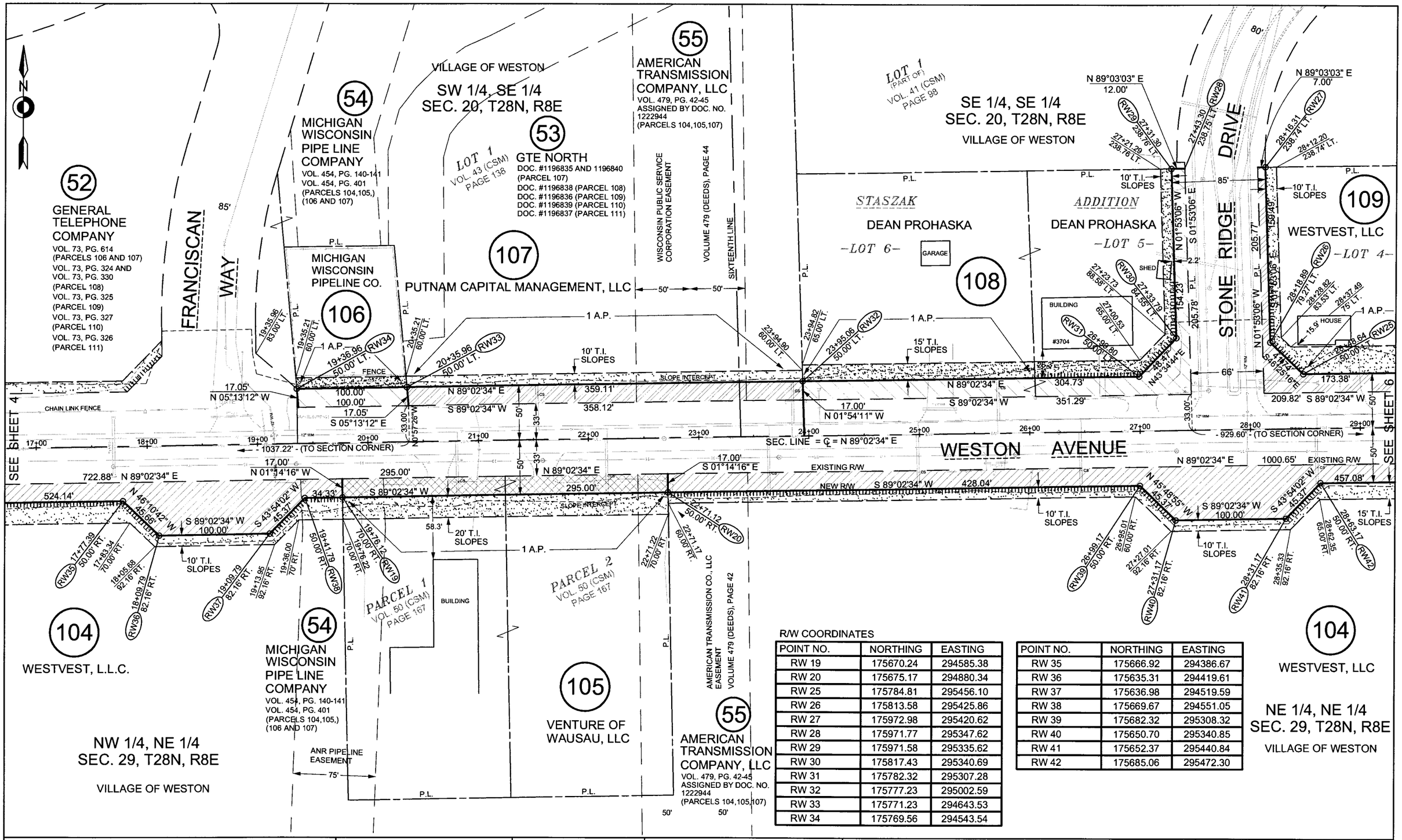

R/W COORDINATES

POINT NO.	NORTHING	EASTING
RW 19	175670.24	294585.38
RW 20	175675.17	294880.34
RW 25	175784.81	295456.10
RW 26	175813.58	295425.86
RW 27	175972.98	295420.62
RW 28	175971.77	295347.62
RW 29	175971.58	295335.62
RW 30	175817.43	295340.69
RW 31	175782.32	295307.28
RW 32	175777.23	295002.59
RW 33	175771.23	294643.53
RW 34	175769.56	294543.54

POINT NO.	NORTHING	EASTING
RW 35	175666.92	294386.67
RW 36	175635.31	294419.61
RW 37	175636.98	294519.59
RW 38	175669.67	294551.05
RW 39	175682.32	295308.32
RW 40	175650.70	295340.85
RW 41	175652.37	295440.84
RW 42	175685.06	295472.30

REVISION DATE 9-8-03, 10-16-03, 10-31-03, 1-06-04	DATE: 3-31-03	SCALE, FEET 0 20 40 80	HWY: WESTON AVE.	CONSTRUCTION PROJECT NUMBER 6999-10-75	PS&E SHEET NO: 4.5
			COUNTY: MARATHON	STATE R/W PROJECT NUMBER	127 E

LEVELS ON =

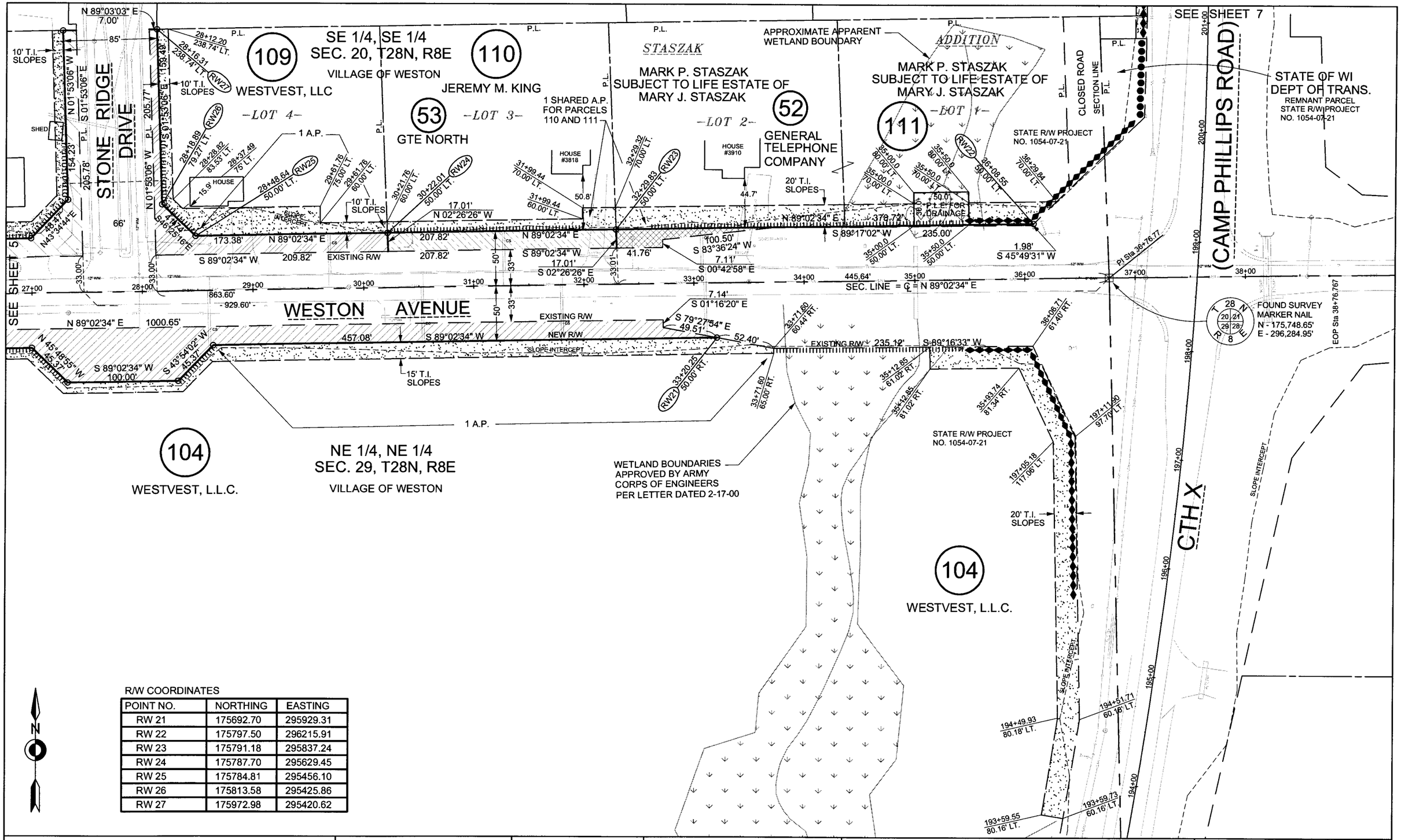

R/W COORDINATES

POINT NO.	NORTHING	EASTING
RW 21	175692.70	295929.31
RW 22	175797.50	296215.91
RW 23	175791.18	295837.24
RW 24	175787.70	295629.45
RW 25	175784.81	295456.10
RW 26	175813.58	295425.86
RW 27	175972.98	295420.62

REVISION DATE 9-8-03, 10-16-03, 10-31-03, 1-06-04	DATE: 3-31-03	SCALE, FEET 0 20 40 80	HWY: WESTON AVE.	CONSTRUCTION PROJECT NUMBER 6999-10-75	PS&E SHEET NO: 4.6
			COUNTY: MARATHON	STATE R/W PROJECT NUMBER	128 E

LEVELS ON =

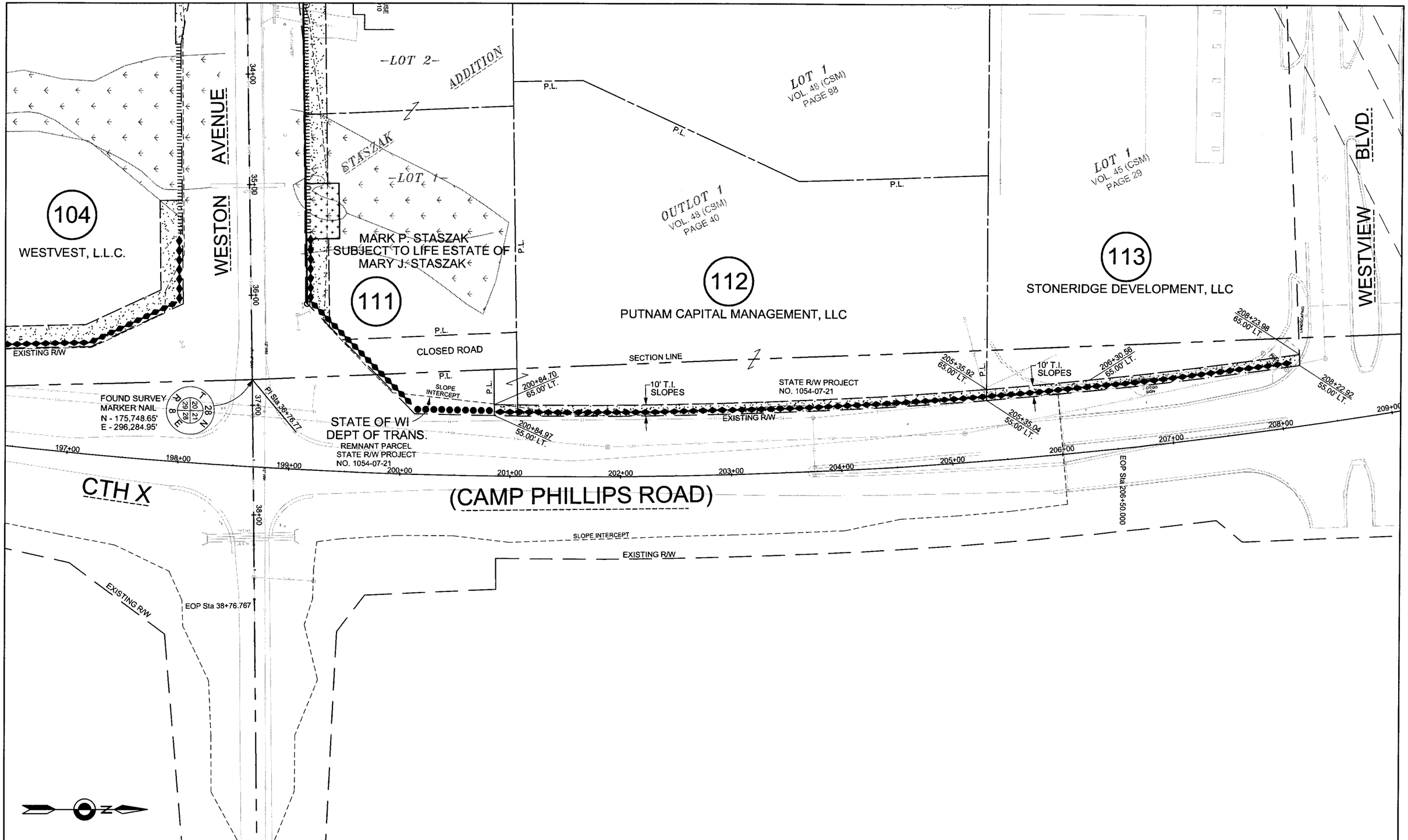

REVISION DATE 9-8-03, 10-16-03, 10-31-03, 1-06-04	DATE: 3-31-03	SCALE, FEET 0 20 40 80	HWY: WESTON AVE.	CONSTRUCTION PROJECT NUMBER 6999-10-75	PS&E SHEET NO: 4.7	
			COUNTY: MARATHON	STATE R/W PROJECT NUMBER	129	E

LEVELS ON =

BENCH MARK TABLE			
NO.	STATION	DESCRIPTION	ELEV.
1	9+39, 74' LT.	RR SPIKE IN PP 49AA78	1290.80

① TYPE 1 CURB RAMP
② TYPE 2 CURB RAMP

BIRCH STREET

BRUSH & SMALL TREES

BRUSH & SMALL TREES

STA 9+86
EXIST 18" CULVERT
PIPE TO BE REMOVED

WESTON AVENUE

STA 9+50, 27' RT
EXIST 12" CULVERT
PIPE TO BE REMOVED

ASPH

CONC 10' MULTI-USE PATH

CLOSE P.E.

BEGIN PROJECT
STA. 7+00
Y = 175,709.2343
X = 293,308.6010

PI Sta = 10+00.00
N = 175703.93
E = 293608.55
I = 01°58'16"L

PI Sta 10+00.000

LANDMARK REFERENCE MONUMENT

STA 30+95, 21' RT
EXIST 12" CULVERT
PIPE TO BE REMOVED

TI FOR SLOPES

SLOPE INTERCEPT

GRAVEL SURFACE

STA 12+24, LT
CONST GR CE

GRAVEL SURFACE

5' CONC. SIDEWALK

CAUTION

CONCRETE CURB AND GUTTER, 30", TYPE D

STA 12+24, 25' LT
EXIST 12" CULVERT
PIPE TO BE REMOVED

CONCRETE CURB AND GUTTER, 18", TYPE D

VALVE

10' MULTI-USE PATH

SHED

TO BE REMOVED

CLOSE P.E.

TI FOR SLOPES

SLOPE INTERCEPT

HOUSE
7701

BOP EL = 1291.59
EL = 1291.59

-1.265%

VPC STA = 12+00.00
VPC EL = 1285.26

7+00	7+50	8+00	8+50	9+00	9+50	10+00	10+50	11+00	11+50	12+00	12+50	13+00
1291.59	1290.96 / 1291.14	1290.32 / 1290.95	1289.69 / 1290.51	1289.06 / 1290.02	1288.43 / 1289.73	1287.80 / 1289.01	1287.16 / 1288.47	1286.53 / 1287.41	1285.90 / 1286.33	1285.26 / 1285.47	1284.64 / 1284.78	1284.04 / 1284.17

STATE PROJECT NUMBER: 6999-10-75	HWY: WESTON AVENUE	COUNTY: MARATHON	PLAN & PROFILE: WESTON AVENUE	SHEET NO: 130	E

P:\DRAFT\32290200 WDOT\RCp21001.dwg, Layout1, 04/01/2004 10:11:49 AM

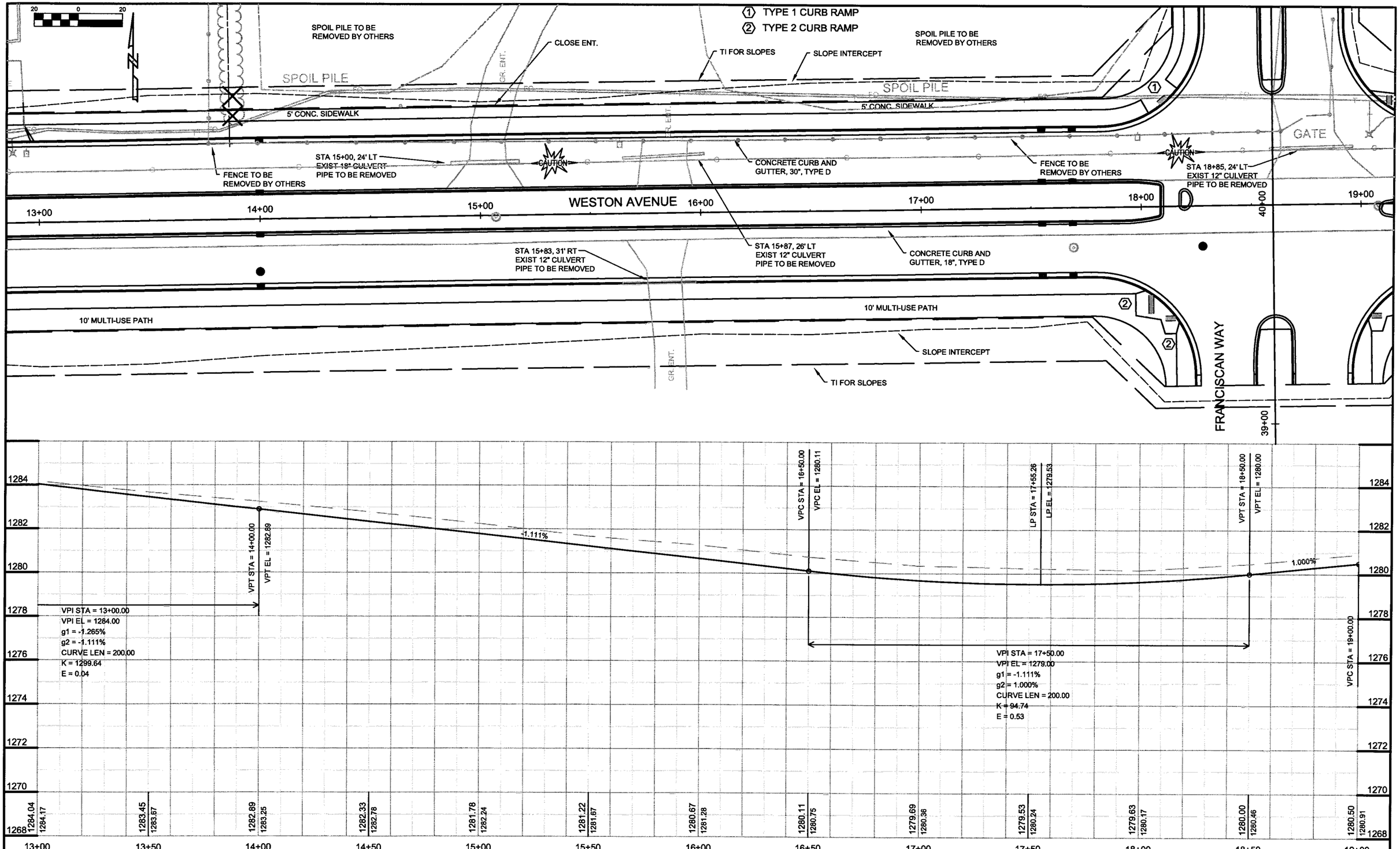

STATE PROJECT NUMBER: 6999-10-75	HWY: WESTON AVENUE	COUNTY: MARATHON	PLAN & PROFILE: WESTON AVENUE	SHEET NO: 13	E

P:\DRAFT\32290200 WDOT\RCp22001.dwg, Layout1, 04/01/2004 10:12:18 AM

ANR PIPELINE SUBSTATION

① TYPE 1 CURB RAMP
② TYPE 2 CURB RAMP

BENCH MARK TABLE			
NO.	STATION	DESCRIPTION	ELEV.
2	22+88, 49' LT.	RR SPIKE IN WEST ATC POLE	1280.62

STA 19+90, LT
CONST GR CE

STA 21+15, LT
CONST GR CE

TI FOR SLOPES

SLOPE INTERCEPT

22+52, 49.50' LT

22+82, 47.50' LT

23+06, 47.50' LT

23+36, 49.50' LT

8" STEEL

12" STEEL

GR CE

BRUSH & SMALL TREES

WOODED

GRAVEL SURFACE

5' CONC. SIDEWALK

CAUTION

CONCRETE CURB AND GUTTER, 30", TYPE D

WESTON AVENUE

19+00 20+00 21+00 22+00 23+00 24+00 25+00

CONCRETE CURB AND GUTTER, 18", TYPE D

10' MULTI-USE PATH

LP

SIGN

STA 20+60, RT
CONST GR CE

CLOSE C.E.

TI FOR SLOPES

SLOPE INTERCEPT

WOODED

30 0 30

N

VPI STA = 20+00.00
VPI EL = 1281.50
g1 = 1.000%
g2 = -1.143%
CURVE LEN = 200.00
K = 93.33
E = 0.54

1.000%

-1.143%

VPC EL = 1280.50

8" STEEL ANR PIPELINE

12" STEEL ANR PIPELINE

HP STA = 19+93.33
HP EL = 1280.97

VPT STA = 21+00.00
VPT EL = 1280.36

1284 1282 1280 1278 1276 1274 1272 1270 1268

19+00	19+50	20+00	20+50	21+00	21+50	22+00	22+50	23+00	23+50	24+00	24+50	25+00
1280.50	1280.87	1280.96	1280.79	1280.36	1279.79	1279.21	1278.64	1278.07	1277.50	1276.93	1276.36	1275.79
1280.91	1281.31	1281.46	1281.30	1280.89	1280.18	1279.60	1279.05	1278.51	1278.01	1277.37	1276.85	1276.37

STATE PROJECT NUMBER: 6999-10-75	HWY: WESTON AVENUE	COUNTY: MARATHON	PLAN & PROFILE: WESTON AVENUE	SHEET NO: 132	E

P:\DRAFT\32290200 WDOT\RCp23001.dwg, Layout1, 04/01/2004 10:12:48 AM

20 0 20

STA 25+20, LT
CONST GR PE

GR. P.E.

WOODED

5' CONC. SIDEWALK

STA 25+20, 23' LT
EXIST 24" CULVERT
PIPE TO BE REMOVED

CAUTION

CLOSE C.E.

LIGHT POLES TO
BE REMOVED

TI FOR SLOPES

SLOPE INTERCEPT

STA 28+95, LT
CONST GR PE

5' CONC. SIDEWALK

5' CO

CONCRETE CURB AND
GUTTER, 30", TYPE D

① TYPE 1 CURB RAMP
② TYPE 2 CURB RAMP

25+00 WESTON AVENUE 26+00 27+00 28+00 29+00 30+00 31+00

50-00

STA 25+70, 27' RT
EXIST 15" CULVERT
PIPE TO BE REMOVED

F.E.

CLOSE F.E.

10' MULTI-USE PATH

BRUSH & STUMPS

WOODED

STONE RIDGE
DRIVE

19+00

CONCRETE CURB AND
GUTTER, 18", TYPE D

STA 30+30, 25' RT
EXIST 24" CULVERT
PIPE TO BE REMOVED

CLOSE F.E.

10' MULTI-USE PATH

BRUSH & STUMPS

TI FOR SLOPES

SLOPE INTERCEPT

VPI STA = 27+00.00
VPI EL = 1273.50
g1 = -1.143%
g2 = -3.390%
CURVE LEN = 200.00
K = 88.99
E = 0.56

-1.143%

-3.390%

VPC STA = 26+00.00
VPC EL = 1274.64

VPT STA = 28+00.00
VPT EL = 1270.11

1278 1276 1274 1272 1270 1268 1266 1264 1262

1275.79 1276.37
1275.21 1275.89
1274.64 1275.28
1273.93 1274.48
1272.94 1273.40
1271.66 1271.98
1270.11 1270.54

25+00 25+50 26+00 26+50 27+00 27+50 28+00

1278 1276 1274 1272 1270 1268 1266 1264 1262 1260 1258 1256 1254

1268.41 1269.02
1266.72 1267.33
1265.02 1265.64
1263.33 1263.95
1261.63 1262.26
1259.94 1260.62

28+50 29+00 29+50 30+00 30+50 31+00

STATE PROJECT NUMBER: 6999-10-75	HWY: WESTON AVENUE	COUNTY: MARATHON	PLAN & PROFILE: WESTON AVENUE	SHEET NO: 133	E

P:\DRAFT\32290200 WDOT\RCp24001.dwg, Layout1, 04/01/2004 10:13:09 AM

20 0 20

STA 32+10, LT
CONST GR PE

STA 33+45, LT
CONST ASPH PE

SLOPE INTERCEPT

TI FOR SLOPES

TO BE MOVED
BY OTHERS

SAT. DISH

WETLANDS

WOODED

① TYPE 1 CURB RAMP
② TYPE 2 CURB RAMP

5' CONC. SIDEWALK

CONC PLANTER

CAUTION

WESTON AVENUE

CONCRETE CURB AND
GUTTER, 30", TYPE A

PI Sta = 36+76.77
PN = 175748.65
PE = 296284.95
PI = 00°16'41"R

CONC. PAVT

31+00 32+00 33+00 34+00 35+00 36+00 37+00

60.00

STA 32+10, 25' LT
EXIST 18" CULVERT
PIPE TO BE REMOVED

CONCRETE CURB AND
GUTTER, 30", TYPE D

STA 33+40, 25' LT
EXIST 18" CULVERT
PIPE TO BE REMOVED

CONCRETE CURB AND
GUTTER, 18", TYPE D

STA 35+00 EXIST
42" CULVERT PIPE
TO BE ABANDONED

CONCRETE CURB AND
GUTTER, 18", TYPE A

LANDMARK REFERENCE
MONUMENT

PI Sta 36+76.767

10' MULTI-USE PATH

BRUSH & STUMPS

TI FOR SLOPES

SLOPE INTERCEPT

STRUCTURE R-37-34 REQUIRED
(SEE STRUCTURE PLAN)

MEADOW ROCK
DRIVE

WETLANDS

VPC STA = 33+00.00
VPC EL = 1252.14

STRUCTURE R-37-34 REQUIRED
(SEE STRUCTURE PLAN)

LP STA = 34+95.77
LP EL = 1249.33

VPT STA = 35+30.00
VPT EL = 1249.45

-3.390%

0.700%

VPI STA = 34+30.00
VPI EL = 1248.75
g1 = -3.390%
g2 = 0.700%
CURVE LEN = 200.00
K = 48.89
E = 1.02

1260 1258 1256 1254 1252 1250 1248 1246 1244

1254 1252 1250 1248 1246 1244 1242 1240 1238

1259.94 1260.82 | 1258.24 1259.05 | 1256.55 1257.40 | 1254.85 1255.78 | 1253.16 1254.15 | 1251.50 1252.47 | 1250.27 1250.79 | 1249.54 1249.12 | 1249.33 1247.46 | 1249.59 1246.56 | 1249.94 1246.06 | 1250.29 1245.78 | 1250.64 1246.28

31+00 31+50 32+00 32+50 33+00 33+50 34+00 34+50 35+00 35+50 36+00 36+50 37+00

STATE PROJECT NUMBER: 6999-10-75	HWY: WESTON AVENUE	COUNTY: MARATHON	PLAN & PROFILE: WESTON AVENUE	SHEET NO: 134	E

REV. 7/16/04

① TYPE 1 CURB RAMP
② TYPE 2 CURB RAMP

WOODED
WOODED
WOODED
WOODED

10' MULTI-USE PATH
CONCRETE CURB AND GUTTER, 30", TYPE A
5' CONC. SIDEWALK
SLOPE INTERCEPT
5:1
18:1
CAUTION
CAUTION
CAUTION
99+00
CONCRETE CURB AND GUTTER, 18", TYPE A
CONC. PAVT
CONC. PAVT
37+00
38+00
39+00
40+00
41+00
42+00
43+00
WESTON AVENUE
STA 38+18 & 38+23
EXIST 30" CULVERT
PIPEs TO BE ABANDONED
14:1
CONC
ASPH
10' MULTI-USE PATH
SLOPE INTERCEPT
198+00
EOP Sta 43+00.00

Y = 175,753.6678
X = 296,708.1506
END PROJECT
STA. 41+00

20 0 20
N

1260
1258
1256
1254
1252
1250
1248
1246
1244

VPC STA = 38+50.00
VPC EL = 1251.69
VPT STA = 39+50.00
VPT EL = 1253.71
EOP STA = 41+00.00
EOP EL = 1258.71
3.335%
0.700%

VPI STA = 39+00.00
VPI EL = 1252.04
g1 = 0.700%
g2 = 3.335%
CURVE LEN = 100.00
K = 37.95
E = 0.33

37+00	37+50	38+00	38+50	39+00	39+50	40+00	40+50	41+00	41+50	42+00	42+50	43+00
1250.64 / 1246.28	1250.99 / 1247.69	1251.34 / 1249.06	1251.69 / 1250.58	1252.37 / 1252.23	1253.71 / 1254.00	1255.38 / 1255.62	1257.04 / 1257.20	1258.71	1260.15	1261.44	1262.51	1263.57

STATE PROJECT NUMBER: 6999-10-75	HWY: WESTON AVENUE	COUNTY: MARATHON	PLAN & PROFILE: WESTON AVENUE	SHEET NO: 135	E

P:\DRAFT\32290200 WDOT\RCp26001.dwg, Layout1, 04/01/2004 10:13:58 AM

BENCH MARK TABLE			
NO.	STATION	DESCRIPTION	ELEV.
3	191+05, 68' RT.	RR SPIKE IN PP 2808-28W10	1235.59

20 0 20

TI FOR SLOPES

SLOPE INTERCEPT

10' MULTI-USE PATH ASPH.

CONC. 10' MULTI-USE PATH

18" CMP

CAUTION

EDGE SHOULDER

STA 195+35, 44' LT
EXIST 18" CULVERT
PIPE TO BE REMOVED

CONCRETE CURB AND GUTTER, 30", TYPE A

190+00 191+00 192+00 193+00 194+00 C.T.H. X 195+00 196+00

CONCRETE CURB AND GUTTER, 18", TYPE A

TRANSPORT WAY

48" CMP

BEGIN CONSTRUCTION
STA. 191+50
Y = 175,039.1310
X = 296,264.0871

STA 195+00, 44' RT
EXIST 48" CULVERT
PIPE TO BE REMOVED

SLOPE INTERCEPT

VPI STA = 192+50.00
VPI EL = 1240.54
g1 = 2.500%
g2 = 1.800%
CURVE LEN = 200.00
K = 285.71
E = 0.17

BOP STA = 191+50.00
BOP EL = 1238.04

VPT STA = 193+50.00
VPT EL = 1242.34

2.500%

1.800%

1248 1246 1244 1242 1240 1238 1236 1234 1232

190+00	190+50	191+00	191+50	192+00	192+50	193+00	193+50	194+00	194+50	195+00	195+50	196+00
1234.26	1235.54	1236.80	1238.04	1239.25	1240.37	1241.40	1242.34	1243.24	1244.14	1245.04	1245.94	1246.84
			1238.04	1239.28	1240.46	1241.44	1242.37	1243.15	1243.97	1244.82	1245.24	1245.77

STATE PROJECT NUMBER: 6999-10-75	HWY: WESTON AVENUE	COUNTY: MARATHON	PLAN & PROFILE: C.T.H. X	SHEET NO: 136	E

P:\DRAFT\32290200 WDOTRCp04007.dwg, Layout1, 04/01/2004 10:16:31 AM

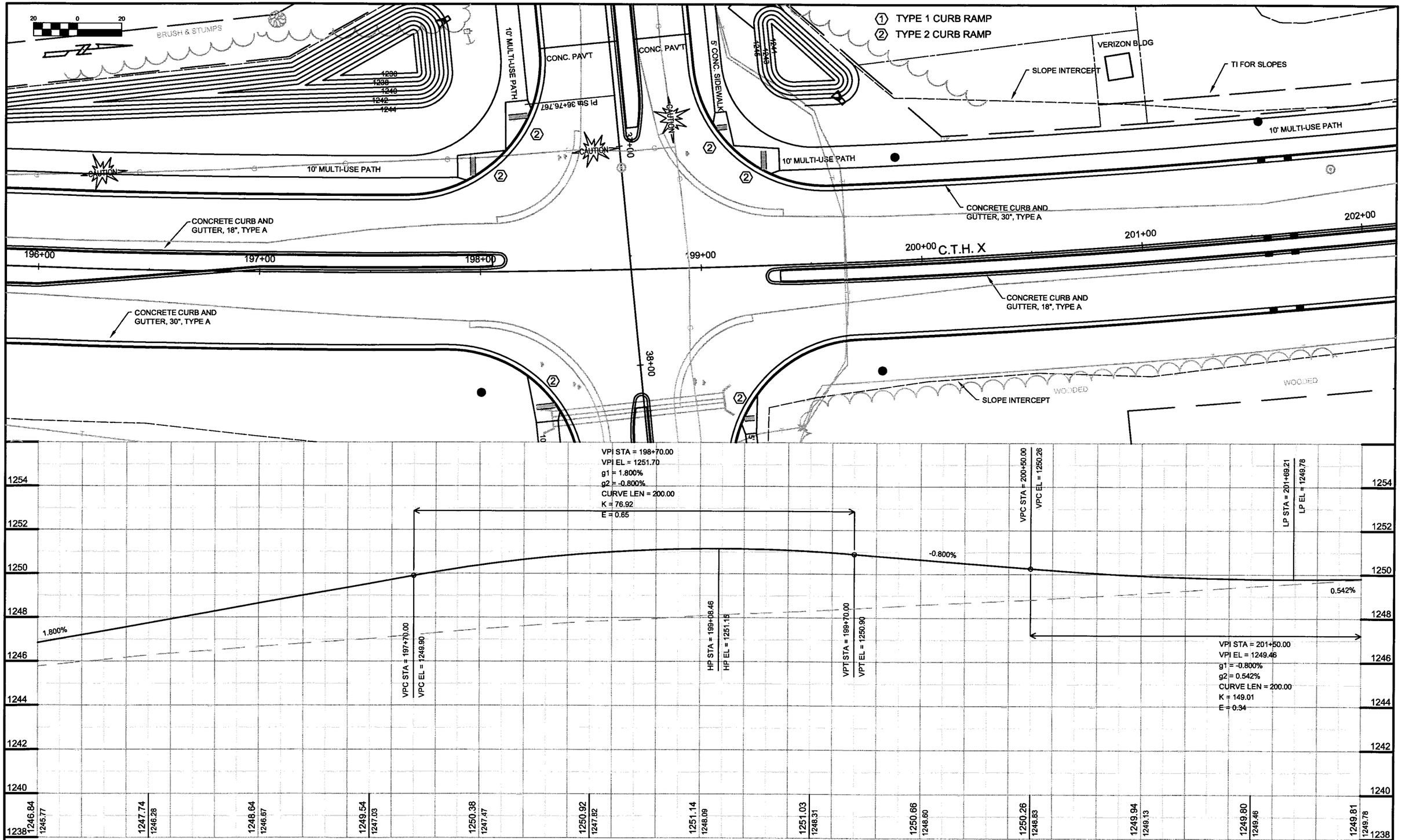

STATE PROJECT NUMBER: 6999-10-75	HWY: WESTON AVENUE	COUNTY: MARATHON	PLAN & PROFILE: C.T.H. X	SHEET NO: 137	E

P:\DRAFT\32290200 WDOT\RCp05007.dwg, Layout1, 04/01/2004 10:16:59 AM

BENCH MARK TABLE			
NO.	STATION	DESCRIPTION	ELEV.
4	205+21, 130' LT.	CHISELED SQUARE ON TOP OF 60" CONCRETE ENDWALL	1249.47

① TYPE 1 CURB RAMP
② TYPE 2 CURB RAMP

B.M. 4

TI FOR SLOPES

SLOPE INTERCEPT

10' MULTI-USE PATH

CONCRETE CURB AND GUTTER, 30", TYPE A

CITGO SIGN

LANDSCAPING

PED

202+00 203+00 204+00 205+00 206+00 208+00

C.T.H. X

EOP = 206+50.00
E = 296346.17
N = 176530.19207+00

CONCRETE CURB AND GUTTER, 18", TYPE A

PI Sta = 196+82.39
N = 175537.77
E = 296454.40
I = 24°34'24"L

SLOPE INTERCEPT

REMOVE SLOPED CURB (TYP.)

END CONSTRUCTION
STA. 206+00
Y = 176,480.4558
X = 296,351.3150

VPT STA = 202+50.00
VPT EL = 1250.00

0.542%

C/L MEDIAN

C/L LANES

EOP STA = 206+00.00
EOP EL = 1251.90

1256 1254 1252 1250 1248 1246 1244 1242 1240

1249.81 1249.78 | 1250.00 1250.11 | 1250.27 1250.41 | 1250.54 1250.70 | 1250.82 1251.35 | 1251.09 1251.69 | 1251.36 1252.01 | 1251.63 1252.27 | 1252.56 | 1252.85

202+00 202+50 203+00 203+50 204+00 204+50 205+00 205+50 206+00 206+50 207+00 207+50 208+00

STATE PROJECT NUMBER: 6999-10-75	HWY: WESTON AVENUE	COUNTY: MARATHON	PLAN & PROFILE: C.T.H. X	SHEET NO: 138	E

P:\DRAFT\3229020O WDOTRCp06007.dwg, Layout1, 04/01/2004 10:19:06 AM

20 0 20

① TYPE 1 CURB RAMP
② TYPE 2 CURB RAMP

MULTI-USE PATH

4" YELLOW SOLID, EPOXY

STA 9+86
EXIST 18" CULVERT
PIPE TO BE REMOVED

PI Sta 10+00.000

PI Sta = 30+00.00
N = 175703.93
E = 293608.55
I = 00°01'49"R

LANDMARK REFERENCE MONUMENT

STA 28+75, RT
CONST GR CE

BEGIN CONSTRUCTION
STA. 27+50

HOUSE 7701

SLOPE INTERCEPT
TI FOR SLOPES
5' CONST. EASEMENT
5' CONC. SIDEWALK

BIRCH STREET

CONCRETE CURB AND GUTTER, 30", TYPE D

STA 30+95, 21' RT
EXIST 12" CULVERT
PIPE TO BE REMOVED

CONCRETE CURB AND GUTTER, 18", TYPE D

CAUTION

5' CONC. SIDEWALK

SLOPE INTERCEPT
TI FOR SLOPES
GRAVEL SURFACE

STA 31+50, RT
CONST GR CE

END CONSTRUCTION
STA. 32+00

27+00 28+00 29+00 30+00 31+00 32+00

BOP STA = 27+50.00
BOP EL = 1282.86

2.141%

VPI STA = 29+70.50
VPI EL = 1287.58
VPI STA = 29+81.50
VPI EL = 1287.80
VPI STA = 29+92.50
VPI EL = 1287.96
VPI STA = 30+02.50
VPI EL = 1288.01
VPI STA = 30+12.50
VPI EL = 1287.96
VPI STA = 30+23.50
VPI EL = 1287.80
VPI STA = 30+34.50
VPI EL = 1287.58

-0.504%

VPC STA = 30+75.00
VPC EL = 1287.38
LP STA = 30+87.21
LP EL = 1287.35

VPT STA = 31+25.00
VPT EL = 1287.64

1.560%

VPI STA = 31+00.00
VPI EL = 1287.25
g1 = -0.504%
g2 = 1.560%
CURVE LEN = 50.00
K = 24.23
E = 0.13

EOP STA = 32+00.00
EOP EL = 1288.81

1292 1290 1288 1286 1284 1282 1280 1278 1276

26+50	27+00	27+50	28+00	28+50	29+00	29+50	30+00	30+50	31+00	31+50	32+00	32+50
1280.83	1281.82	1282.86	1283.93 / 1283.95	1285.00 / 1285.15	1286.07 / 1286.55	1287.14 / 1287.95	1287.54 / 1289.01	1287.50 / 1289.43	1287.38 / 1289.20	1288.03 / 1289.05	1288.81	1291.11

STATE PROJECT NUMBER: 6999-10-75	HWY: WESTON AVENUE	COUNTY: MARATHON	PLAN & PROFILE: BIRCH STREET	SHEET NO: 139	E

P:\DRAFT\32290200 WDOT\RCp03008.dwg, Layout1, 04/01/2004 10:19:44 AM

20 0 20

① TYPE 1 CURB RAMP
② TYPE 2 CURB RAMP

TI FOR SLOPES

SLOPE INTERCEPT

EOP = 41+08.58
E = 294466.41
N = 175826.86

CONCRETE CURB AND GUTTER, 18", TYPE D

FRANCISCAN WAY

BOP = 38+70.00
E = 294470.40
N = 175588.31

PI Sta = 40+00.00
N = 175718.29
E = 294468.23
I = 00°00'00" R

CONCRETE CURB AND GUTTER, 30", TYPE D

SLOPE INTERCEPT

BEGIN CONSTRUCTION
STA. 39+22

END CONSTRUCTION
STA. 41+05

10' MULTI-USE PATH

GRAVEL SURFACE

8" STEEL

18+00

19+00

39+00

40+00

41+00

42+00

43+00

CAUTION

GATE

BOP STA = 39+22.00
BOP EL = 1278.90

VPI STA = 39+70.50
VPI EL = 1279.88

VPI STA = 39+81.50
VPI EL = 1280.10

VPI STA = 39+92.50
VPI EL = 1279.88

VPI STA = 40+02.50
VPI EL = 1279.83

VPI STA = 40+12.50
VPI EL = 1279.88

VPI STA = 40+23.50
VPI EL = 1280.10

VPI STA = 40+34.50
VPI EL = 1279.88

VPC STA = 40+65.00
VPC EL = 1279.61

VPI STA = 40+90.00
VPI EL = 1279.36
g1 = -1.000%
g2 = 0.500%
CURVE LEN = 50.00
K = 33.33
E = 0.09

VPT STA = 41+15.00
VPC EL = 1279.48

2.021%

-0.885%

LP STA = 40+98.33
VPC EL = 1279.44

1277.72

1279.47
1278.94

1279.84
1280.54

1279.74
1281.24

1279.44
1280.32

1284
1282
1280
1278
1276
1274
1272
1270
1268

38+00 38+50 39+00 39+50 40+00 40+50 41+00 41+50 42+00 42+50 43+00 43+50

STATE PROJECT NUMBER: 6999-10-75	HWY: WESTON AVENUE	COUNTY: MARATHON	PLAN & PROFILE: FRANCISCAN WAY	SHEET NO: 40	E

P:\DRAFT\32290200 WDOT\RCp02009.dwg, Layout1, 04/01/2004 10:20:09 AM

20 0 20

① TYPE 1 CURB RAMP
② TYPE 2 CURB RAMP

STONE RIDGE DRIVE

BOP Sta 48+60.000

BOP = 48+60.00
E = 295391.81
N = 175593.71

PI Sta = 50+00.00
N = 175733.69
E = 295389.47
I = 00°55'40"L

49+00 50+00 51+00

27+00 28+00

LIGHT POLES TO BE REMOVED

TI FOR SLOPES
SLOPE INTERCEPT
4" WHITE SOLID, EPOXY
4" YELLOW SOLID, EPOXY
25' O.C.
CONCRETE CURB AND GUTTER, 30", TYPE D
CONCRETE CURB AND GUTTER, 18", TYPE D
EOP = 51+40.00
E = 295384.87
N = 175673.01
DIAGONAL MARKING EPOXY 24-INCH
94+00
TREES
8" 16" 18" 14"
SLOPE INTERCEPT
TI FOR SLOPES
CAUTION

BEGIN CONSTRUCTION
STA. 49+22

END CONSTRUCTION
STA. 51+00

VPI STA = 49+70.50
VPI EL = 1270.60
VPI STA = 49+81.50
VPI EL = 1270.82
VPI STA = 49+92.50
VPI EL = 1270.60
VPI STA = 50+02.50
VPI EL = 1270.55
VPI STA = 50+12.50
VPI EL = 1270.60
VPI STA = 50+23.50
VPI EL = 1270.82
VPI STA = 50+34.50
VPI EL = 1270.60
VPI STA = 51+00.00
VPI EL = 1271.17

1.031% 0.870% 1.675%

BOP STA = 49+22.00
BOP EL = 1270.10
EOP STA = 51+40.00
EOP EL = 1271.84

1269.70
1270.39 1270.56
1270.56 1271.09
1270.73 1271.49
1271.17 1271.89

1274 1272 1270 1268 1266 1264 1262 1260 1258

48+00 48+50 49+00 49+50 50+00 50+50 51+00 51+50 52+00 52+50 53+00 53+50

STATE PROJECT NUMBER: 6999-10-75	HWY: WESTON AVENUE	COUNTY: MARATHON	PLAN & PROFILE: STONE RIDGE DRIVE	SHEET NO: 41	E

P:\DRAFT\32290200 WDOT\RCp02010.dwg, Layout1, 04/01/2004 10:20:31 AM

20 0 20

① TYPE 1 CURB RAMP
② TYPE 2 CURB RAMP

CONCRETE CURB AND GUTTER, 30", TYPE D

CONCRETE CURB AND GUTTER, 18", TYPE D

BOP Sta 58+70.000

59+00

60+00

32+00

33+00

MEADOW ROCK DRIVE

BEGIN CONSTRUCTION
STA. 59+18

WESTON AVENUE

HOUSE 3818

GR. P.E.

BOP STA = 59+18.00
BOP EL = 1255.12

VPI STA = 39+70.50
VPI EL = 1255.59
VPI STA = 39+81.50
VPI EL = 1255.81
VPI STA = 39+92.50
VPI EL = 1255.59
VPI STA = 40+02.50
VPI EL = 1255.54
VPI STA = 40+12.50
VPI EL = 1255.59
VPI STA = 40+23.50
VPI EL = 1255.81
VPI STA = 40+34.50
VPI EL = 1255.59

0.889%

1252.91
1255.41
1253.73
1256.69

1260
1258
1256
1254
1252
1250
1248
1246
1244

55+50 56+00 56+50 57+00 57+50 58+00 58+50 59+00 59+50 60+00 60+50 61+00 61+50

REV. 7/16/04

STATE PROJECT NUMBER: 6999-10-05	HWY: WESTON AVENUE	COUNTY: MARATHON	PLAN & PROFILE: MEADOW ROCK DRIVE	SHEET NO: 141A	F

NOTE:
GRATE IS REVERSIBLE.

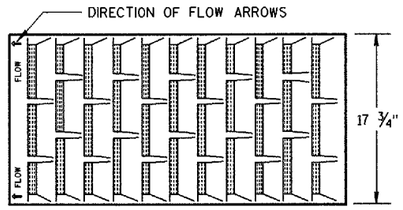

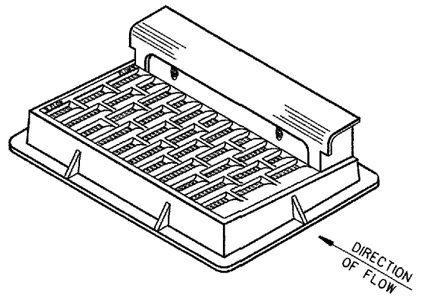

NOTE: CURB BOX HEIGHT ADJUSTABLE 6" TO 9"

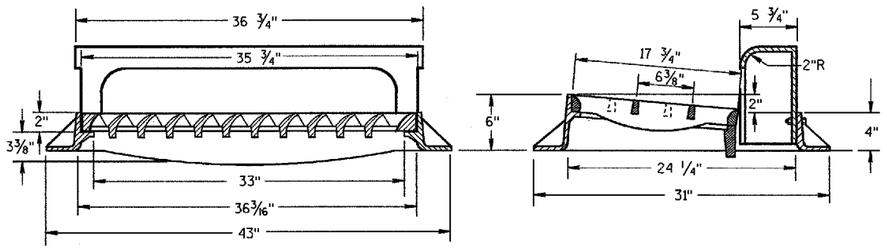

TYPE "H"

(APPROXIMATE WEIGHT 422 LBS.)
FRAME..... 175 LBS.
GRATE..... 138 LBS.
CURB BOX..... 109 LBS.

1 1/8" DIAGONAL BARS WITH 1 5/8" OPENINGS

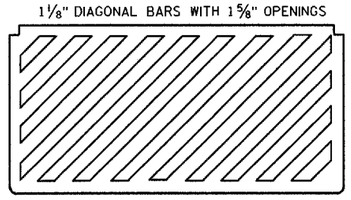

SPECIAL GRATE FOR TYPE "H" COVER

(MEASURES 35 1/4" X 17 3/4" X 2")
(APPROXIMATE WEIGHT 172 LBS.)
GRATE..... 172 LBS.

(NOTED AS TYPE H-S ON DRAINAGE TABLE)

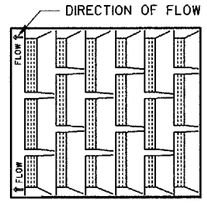

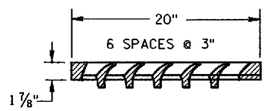

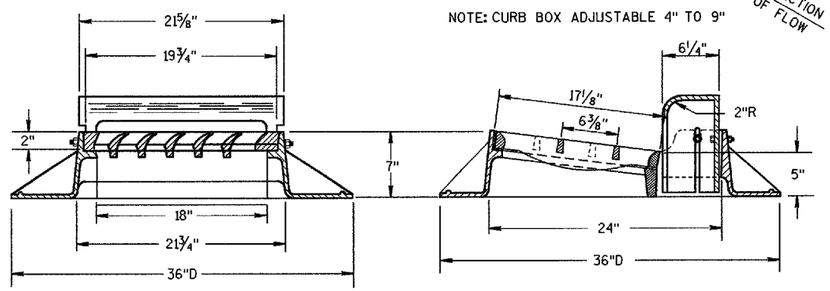

TYPE "A"

(APPROXIMATE WEIGHT 325 LBS.)
FRAME..... 157 LBS.
GRATE..... 84 LBS.
CURB BOX..... 84 LBS.

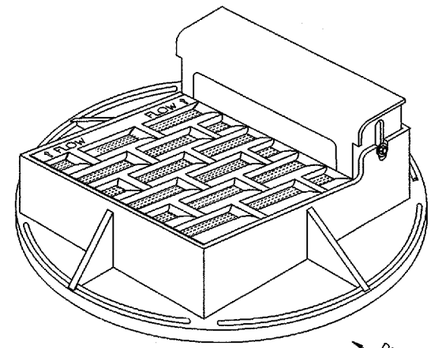

NOTE: CURB BOX ADJUSTABLE 4" TO 9"

NOTE:
GRATE IS REVERSIBLE.

1" DIAGONAL BARS
WITH 1 1/2" OPENINGS

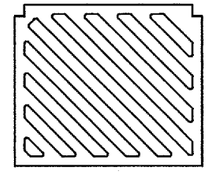

SPECIAL GRATE FOR TYPE "A" COVER

(MEASURES 19 3/4" X 17" X 1 7/8"
GRATE..... 84 LBS.

(NOTED AS TYPE A-S ON DRAINAGE TABLE)

GENERAL NOTES

DETAILS OF CONSTRUCTION, MATERIALS AND WORKMANSHIP NOT SHOWN ON THIS DRAWING SHALL CONFORM TO THE PERTINENT REQUIREMENTS OF THE STANDARD SPECIFICATIONS AND THE APPLICABLE SPECIAL PROVISIONS.

DETAIL DRAWINGS FOR PROPOSED ALTERNATE DESIGNS FOR CATCH BASIN, MANHOLE AND INLET COVERS SHALL BE SUBMITTED TO THE ENGINEER FOR APPROVAL PROVIDING THAT SUCH ALTERNATE DESIGNS MAKE PROVISION FOR EQUIVALENT CAPACITY AND STRENGTH.

ROUND FRAMES AND COVERS SHALL HAVE CONTINUOUSLY MACHINED BEARING SURFACES TO PREVENT ROCKING AND RATTLING.

THE ACTUAL WEIGHT OF COVERS MAY VARY WITHIN 5 PERCENT, PLUS OR MINUS, OF THE APPROXIMATE WEIGHT.

INLET COVERS
TYPE A, H, A-S, & H-S

STATE OF WISCONSIN
DEPARTMENT OF TRANSPORTATION

APPROVED
10/04/99
DATE
CHIEF ROADWAY DEVELOPMENT ENGINEER
FHWA

S.D.D. 8 A 5-16a

S.D.D. 8 A 5-16a

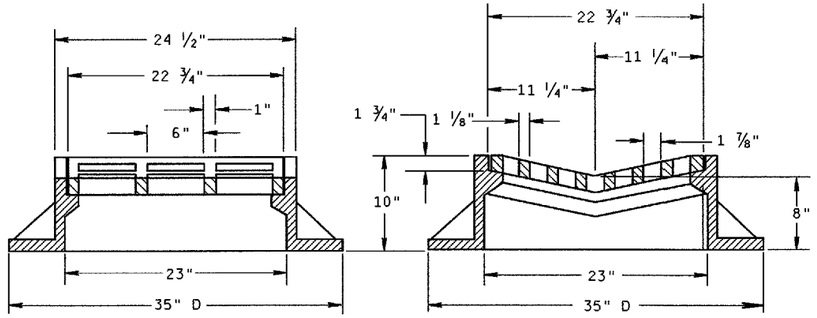

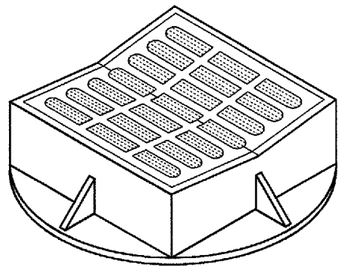

TYPE "B"

(APPROXIMATE WEIGHT 395 LBS.)

FRAME..... 285 LBS.
GRATE..... 110 LBS.

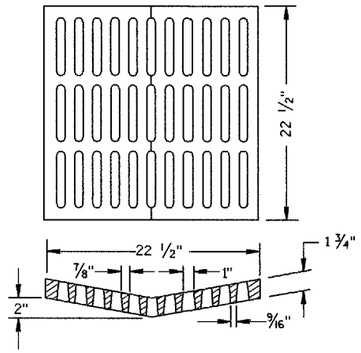

ALTERNATIVE GRATE FOR TYPE "B" COVER

(APPROXIMATE GRATE WEIGHT 125 LBS.)
GRATE.....125 LBS.

USE WHERE PEDESTRIAN OR BICYCLE TRAFFIC IS POSSIBLE.

NOTED AS TYPE B-A ON THE DRAINAGE TABLE

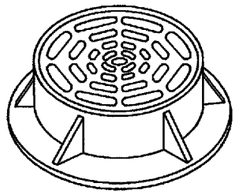

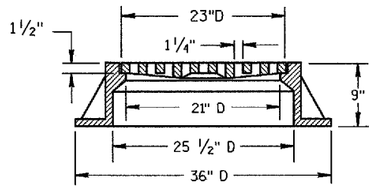

TYPE "C"

(APPROXIMATE WEIGHT 340 LBS.)

FRAME..... 235 LBS.
GRATE..... 105 LBS.

GENERAL NOTES

DETAILS OF CONSTRUCTION, MATERIALS AND WORKMANSHIP NOT SHOWN ON THIS DRAWING SHALL CONFORM TO THE PERTINENT REQUIREMENTS OF THE STANDARD SPECIFICATIONS AND THE APPLICABLE SPECIAL PROVISIONS.

DETAIL DRAWINGS FOR PROPOSED ALTERNATE DESIGNS FOR CATCH BASIN, MANHOLE AND INLET COVERS SHALL BE SUBMITTED TO THE ENGINEER FOR APPROVAL PROVIDING THAT SUCH ALTERNATE DESIGNS MAKE PROVISION FOR EQUIVALENT CAPACITY AND STRENGTH.

ROUND FRAMES AND COVERS SHALL HAVE CONTINUOUSLY MACHINED BEARING SURFACES TO PREVENT ROCKING AND RATTLING.

THE ACTUAL WEIGHT OF COVERS MAY VARY WITHIN 5 PERCENT, PLUS OR MINUS, OF THE APPROXIMATE WEIGHT.

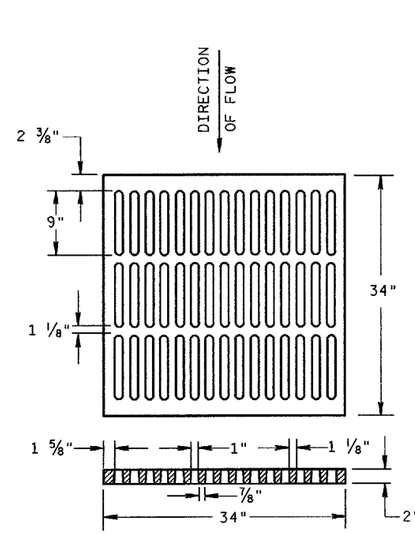

ALTERNATIVE TYPE "MS"

(APPROXIMATE GRATE WEIGHT 365 LBS.)
GRATE.....365 LBS.

USE WHERE PEDESTRIAN OR BICYCLE TRAFFIC IS PERMITTED

NOTED AS TYPE MS-A ON THE DRAINAGE TABLE

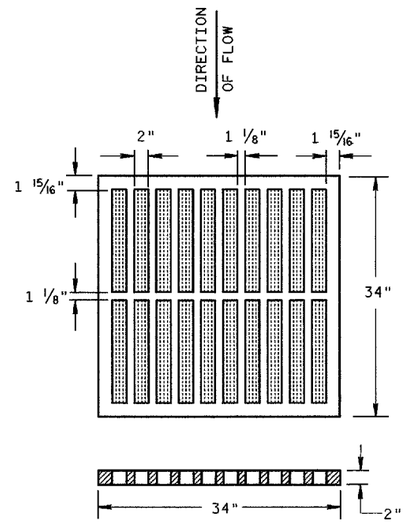

TYPE "MS"

(APPROXIMATE GRATE WEIGHT 270 LBS.)
GRATE.....270 LBS.

USE ON FREEWAYS AND EXPRESSWAYS

NOTED AS TYPE MS ON DRAINAGE TABLE

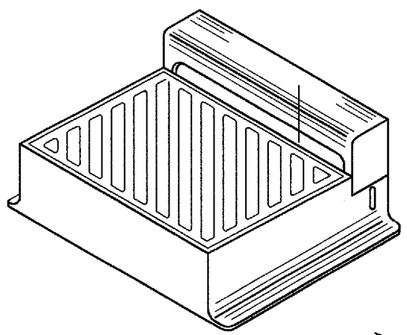

DIAGONAL SLOTS, SHALL BE ORIENTED TO THE DIRECTION OF FLOW AS ILLUSTRATED. GRATES ARE MANUFACTURED TO BE REVERSIBLE.

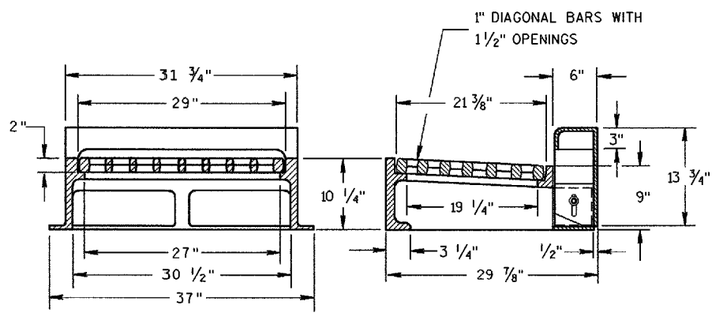

NOTE: CURB BOX HEIGHT ADJUSTABLE 6" TO 9"

TYPE "WM"

(APPROXIMATE WEIGHT 670 LBS.)

FRAME.....360 LBS.
GRATE..... 160 LBS.
CURB BOX..... 150 LBS.

INLET COVERS
TYPE B, B-A, C, MS, MS-A, & WM

STATE OF WISCONSIN
DEPARTMENT OF TRANSPORTATION

APPROVED 10/04/99
DATE

Roy L. Thinesen
CHIEF ROADWAY DEVELOPMENT ENGINEER

FHWA

S.D.D. 8 A 5-16b

S.D.D. 8 A 5-16b

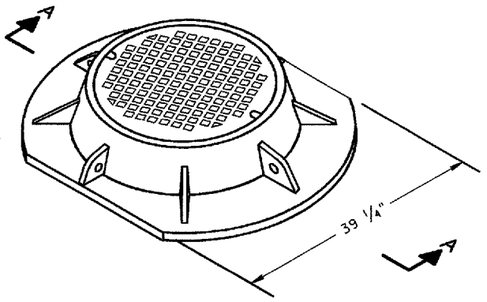

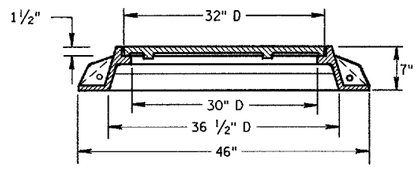

SECTION A-A

TYPE "K"

(APPROXIMATE WEIGHT 415 LBS.)

FRAME.....210 LBS.
LID.....205 LBS.

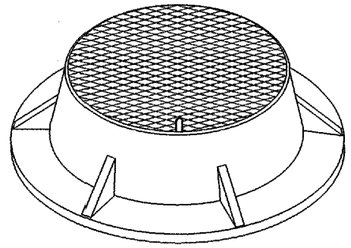

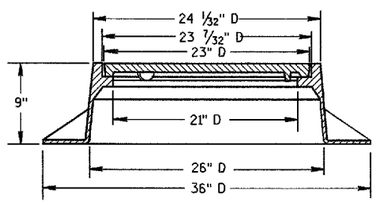

TYPE "J"

(APPROXIMATE WEIGHT 250 LBS.)

FRAME.....135 LBS.
LID.....115 LBS.

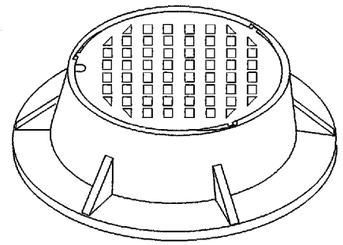

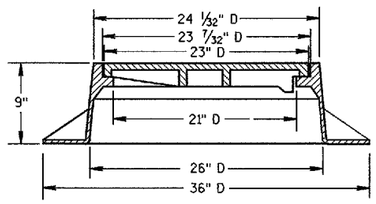

TYPE "J" SPECIAL

TYPE "B" NON-ROCKING SELF-SEAL LID

(APPROXIMATE WEIGHT 245 LBS.)

FRAME.....145 LBS.
LID.....100 LBS.

(NOTED AS TYPE J-S ON THE DRAINAGE TABLE)

GENERAL NOTES

DETAILS OF CONSTRUCTION, MATERIALS AND WORKMANSHIP NOT SHOWN ON THIS DRAWING SHALL CONFORM TO THE PERTINENT REQUIREMENTS OF THE STANDARD SPECIFICATIONS AND THE APPLICABLE SPECIAL PROVISIONS.

DETAIL DRAWINGS FOR PROPOSED ALTERNATE DESIGNS FOR MANHOLE COVERS SHALL BE SUBMITTED TO THE ENGINEER FOR APPROVAL PROVIDING THAT SUCH ALTERNATE DESIGNS MAKE PROVISION FOR EQUIVALENT CAPACITY AND STRENGTH.

ROUND FRAMES AND COVERS SHALL HAVE CONTINUOUSLY MACHINED BEARING SURFACES TO PREVENT ROCKING AND RATTLING.

THE ACTUAL WEIGHT OF COVERS MAY VARY WITHIN 5 PERCENT, PLUS OR MINUS, OF THE APPROXIMATE WEIGHT.

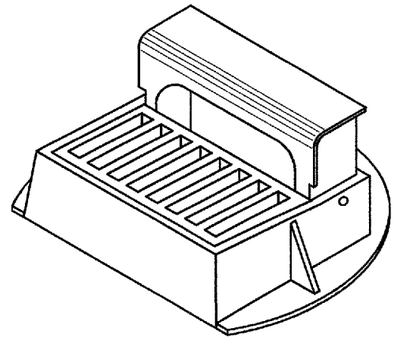

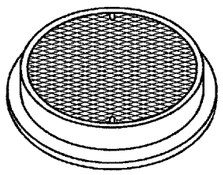

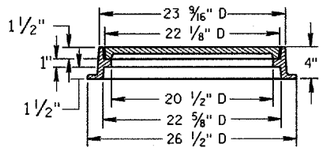

TYPE "L"

(APPROXIMATE WEIGHT 145 LBS.)

FRAME.....75*
LID.....70*

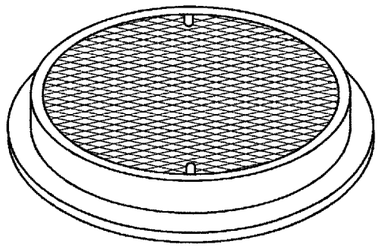

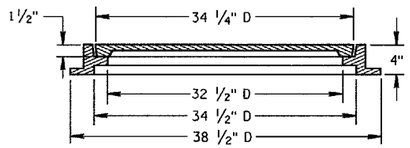

TYPE "M"

(APPROXIMATE WEIGHT 385 LBS.)

FRAME.....125*
LID.....260*

CURB BOX ADJUSTABLE 4" TO 10"

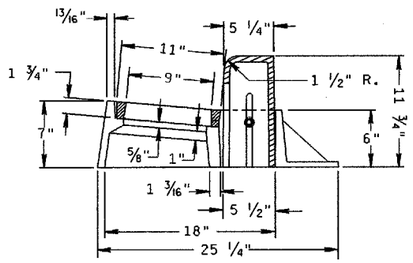

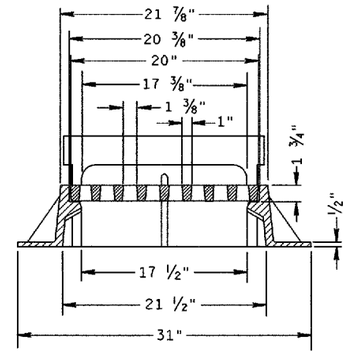

INLET COVER TYPE "Z"

(APPROXIMATE WEIGHT 340 LBS.)

FRAME.....198 LBS.
GRATE.....50 LBS.
CURB BOX.....92 LBS.

INLET COVER, TYPE Z
MANHOLE COVERS, TYPE
K, J, J-S, L & M

STATE OF WISCONSIN
DEPARTMENT OF TRANSPORTATION

APPROVED 10/04/99
DATE

Roy L. Amundson
CHIEF ROADWAY DEVELOPMENT ENGINEER

FHWA

S.D.D. 8 A 5-16d

S.D.D. 8 A 5-16d

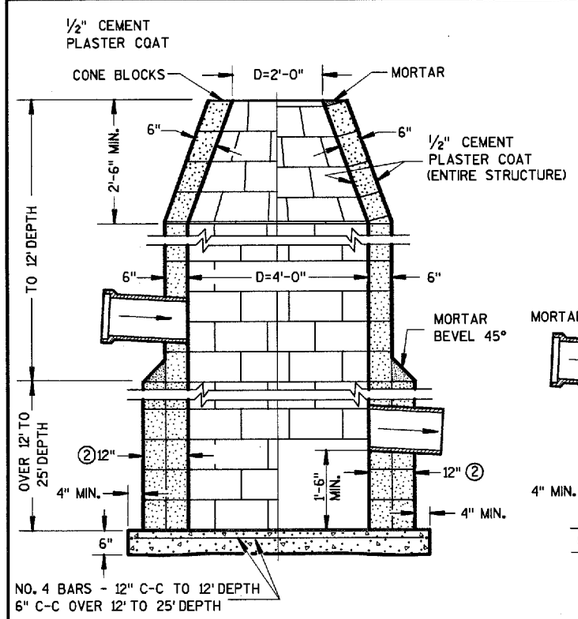

CONCRETE BLOCK

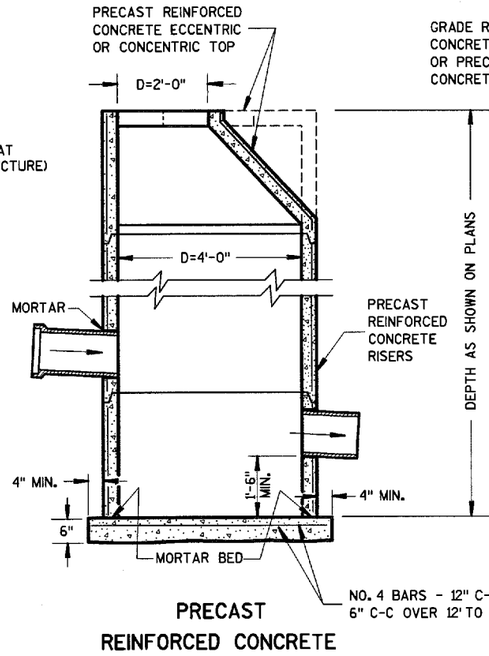

PRECAST REINFORCED CONCRETE

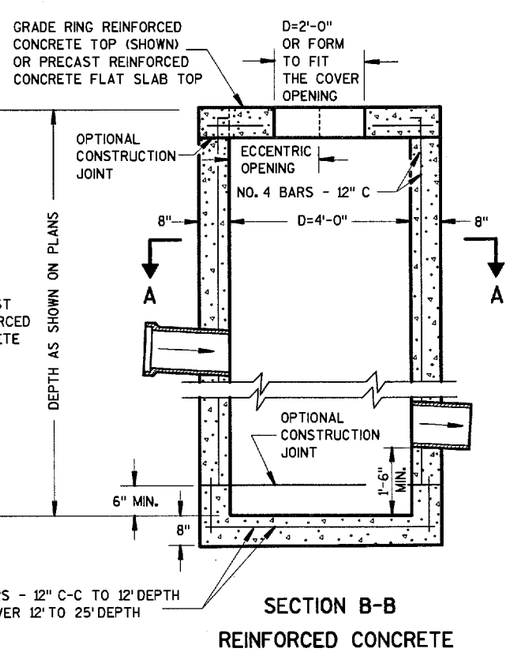

SECTION B-B
REINFORCED CONCRETE

CATCH BASINS, TYPE 1

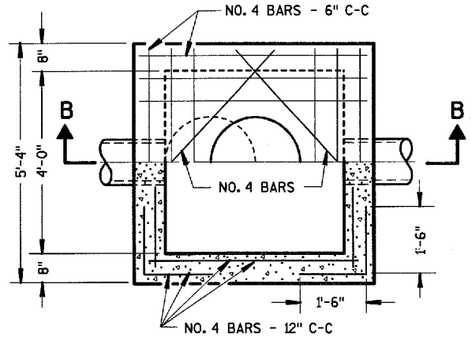

HALF SECTION A-A

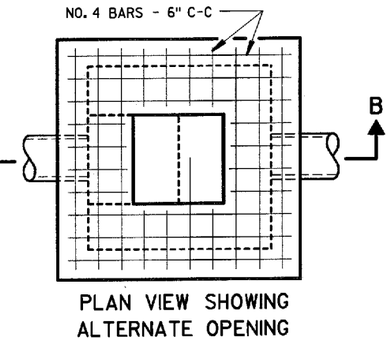

PLAN VIEW SHOWING ALTERNATE OPENING

GENERAL NOTES

DETAILS OF CONSTRUCTION, MATERIALS AND WORKMANSHIP NOT SHOWN ON THIS DRAWING SHALL CONFORM TO THE PERTINENT REQUIREMENTS OF THE STANDARD SPECIFICATIONS AND THE APPLICABLE SPECIAL PROVISIONS.

DETAILED DRAWINGS FOR PROPOSED ALTERNATE DESIGNS FOR UNDERGROUND DRAINAGE STRUCTURES SHALL BE SUBMITTED TO THE ENGINEER FOR APPROVAL PROVIDING THAT SUCH ALTERNATE DESIGNS MAKE PROVISION FOR EQUIVALENT CAPACITY AND STRENGTH.

ALL DRAINAGE STRUCTURES ARE DESIGNATED ON THE PLANS AS "MANHOLES 1-C", "CATCH BASINS 1-B", "INLETS 3-H", ETC. THE FIRST DIGIT DESIGNATES THE MASONRY PORTION OF THE STRUCTURE, AND THE FOLLOWING LETTER DESIGNATES THE TYPE OF COVER TO BE USED TO COMPRISE THE COMPLETE UNIT.

PRECAST REINFORCED BASES SHALL BE PLACED ON A BED OF MATERIAL AT LEAST 6 INCHES IN DEPTH, WHICH MEETS THE REQUIREMENTS OF GRANULAR BACKFILL. THIS BEDDING SHALL BE COMPACTED AND PROVIDE UNIFORM SUPPORT FOR THE ENTIRE AREA OF THE BASE.

PRECAST REINFORCED CONCRETE CONE TOPS (ECCENTRIC OR CONCENTRIC) OR PRECAST REINFORCED CONCRETE FLAT SLAB TOPS MAY BE USED ON CONCRETE BLOCK STRUCTURES. THE CONE TOPS SHALL BE INSTALLED ON A BED OF MORTAR.

ECCENTRIC CONE TOPS MAY BE USED ON ALL STRUCTURES, AND CONCENTRIC CONE TOPS SHALL BE USED ONLY ON STRUCTURES 5 FEET OR LESS IN DEPTH, UNLESS OTHERWISE DIRECTED BY THE ENGINEER.

STEPS MEETING THE FOLLOWING REQUIREMENTS SHALL BE INSTALLED IN ALL STRUCTURES OVER 5 FEET IN DEPTH: 16 INCH C-C MAXIMUM SPACING; PROJECT A MINIMUM CLEAR DISTANCE OF 4 INCHES FROM THE WALL AT THE POINT OF EMBEDMENT; MINIMUM LENGTH OF 10 INCHES; MINIMUM WALL EMBEDMENT OF 3 INCHES. FERROUS METAL STEPS NOT PAINTED OR TREATED TO RESIST CORROSION SHALL HAVE A MINIMUM CROSS SECTIONAL DIMENSION OF 1 INCH.

STEPS OF APPROVED POLYPROPYLENE PLASTIC COATED REINFORCEMENT BAR ARE ACCEPTABLE.

CERTIFICATION SHALL BE PROVIDED THAT INSTALLED STEPS WHEN TESTED IN ACCORDANCE WITH SECTION 10 OF AASHTO T280 CAN WITHSTAND A VERTICAL LOAD OF 800 LBS. AND A HORIZONTAL LOAD OF 400 LBS.

ALL BAR STEEL REINFORCEMENT SHALL BE EMBEDDED 2 INCHES CLEAR UNLESS OTHERWISE SHOWN OR NOTED.

ALL PRECAST INLET UNITS SHALL CONFORM TO THE PERTINENT REQUIREMENTS OF AASHTO DESIGNATION M199.

THE "PRECAST REINFORCED CONCRETE FLAT SLAB TOP" OPTION IS REQUIRED ON CATCH BASINS, TYPE 1 WHEN 2' X 3' OPENING INLET COVERS ARE REQUIRED.

① PRECAST REINFORCED CONCRETE RISERS SHALL BE PLACED WITH THE TONGUE DOWN WHEN GRADE RINGS ARE USED FOR THE SLAB TOP.

② 2 COURSES 6" BLOCK.

③ WHEN THE CONNECTING PIPES ARE 24" OR LARGER THE PRECAST CATCH BASIN MAY BE INCREASED TO 42" DIA.

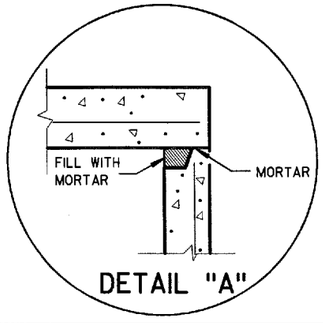

DETAIL "A"

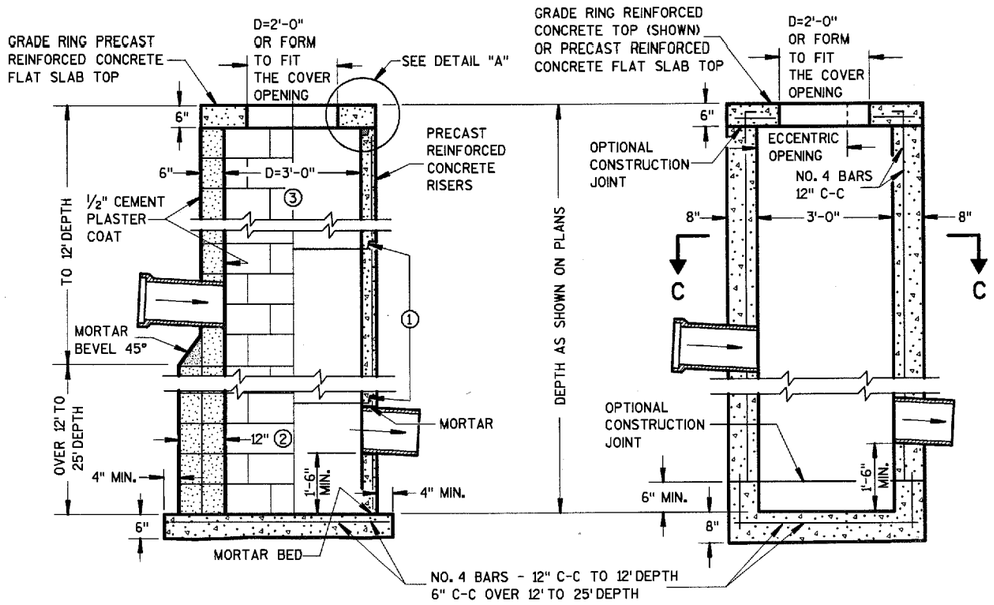

CONCRETE BLOCK

PRECAST REINFORCED CONCRETE

SECTION D-D
REINFORCED CONCRETE

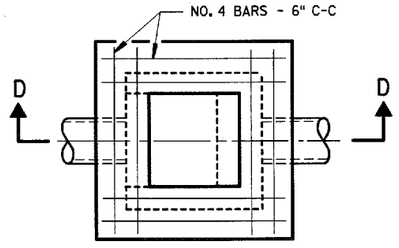

PLAN VIEW SHOWING ALTERNATE OPENING

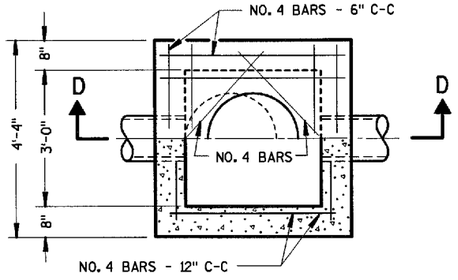

HALF SECTION C-C

CATCH BASINS, TYPE 2

CATCH BASINS TYPE 1 & 2

STATE OF WISCONSIN
DEPARTMENT OF TRANSPORTATION

APPROVED 06/09/99 DATE
Roy A. Thuemmler
CHIEF ROADWAY DEVELOPMENT ENGINEER

FHWA

S.D.D. 8 A 6-4

S.D.D. 8 A 6-4

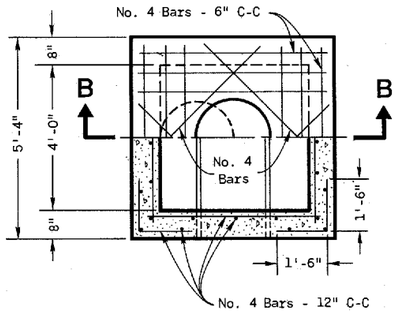

HALF SECTION **A-A**

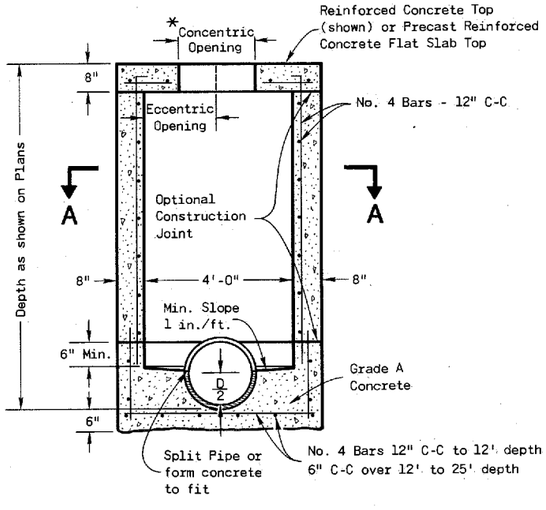

SECTION **B-B**

REINFORCED CONCRETE

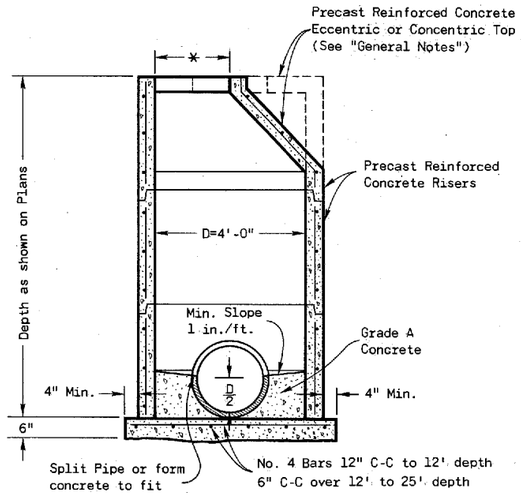

PRECAST REINFORCED CONCRETE

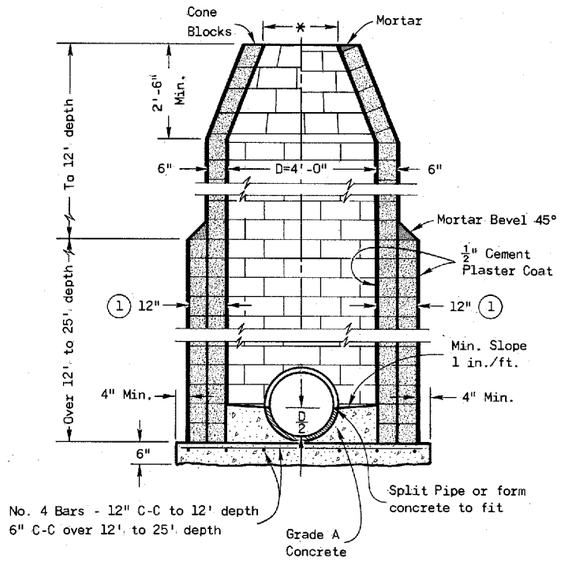

CONCRETE BLOCK

GENERAL NOTES

Details of construction, materials and workmanship not shown on this drawing shall conform to the pertinent requirements of the Standard Specifications and the applicable Special Provisions.

Detailed drawings for proposed alternate designs for underground drainage structures shall be submitted to the Engineer for approval providing that such alternate designs make provision for equivalent capacity and strength.

All drainage structures are designated on the plans as "Manholes 1-C", "Catch Basins 1-B", "Inlets 3-H", etc. The first digit designates the masonry portion of the structure, and the following letter designates the type of cover to be used to comprise the complete unit.

Precast Reinforced Bases shall be placed on a bed of material at least 6 inches in depth, which meets the requirements for Granular Backfill. This bedding shall be compacted and provide uniform support for the entire area of the base.

Precast Reinforced Concrete Cone Tops (Eccentric or Concentric) may be used on concrete block structures. The Cone Tops shall be installed on a bed of mortar.

Eccentric Cone Tops may be used on all structures, and Concentric Cone Tops shall be used only on structures 5 feet or less in depth, unless otherwise directed by the Engineer.

Steps meeting the following requirements shall be installed in all structures over 5 feet in depth: 16 inch C-C maximum spacing; project a minimum clear distance of 4 inches from the wall at the point of embedment; minimum length of 10 inches; minimum wall embedment of 3 inches; and be capable of supporting a concentrated load of 300 lbs. Ferrous metal steps not painted or treated to resist corrosion shall have a minimum cross sectional dimension of 1 inch.

Solid Aluminum steps shall have a minimum cross sectional dimension of 0.75 inch. Aluminum surfaces to be embedded in concrete shall be given one coat of suitable quality paint, such as zinc chromate primer conforming to Federal Specification TT-P-645 or equivalent. Steps of approved Polypropylene plastic coated reinforcement bar will be acceptable.

All bar steel reinforcement shall be embedded 2 inches clear unless otherwise shown or noted.

Precast Reinforced Concrete Risers may be placed with tongue up or down.

All Precast Inlet Units shall conform to the pertinent requirements of AASHTO Designation M 199.

* Use 2'-0" diameter opening with Type "C", "L" and "J" covers, or 3'-0" diameter with Type "K" and "M" covers.

(1) 2 courses 6" block.

MANHOLES TYPE 1

State of Wisconsin
Department of Transportation

APPROVED 4-13-82
DATE

CHIEF DESIGN ENGINEER

FHWA

S.D.D. 8 B 6-3

MANHOLES TYPE 1

S.D.D. 8 B 6-3

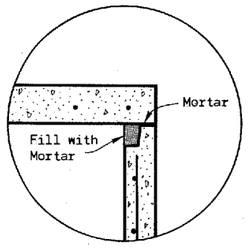

DETAIL "A"

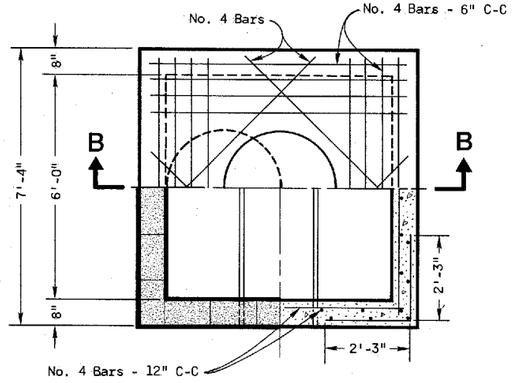

HALF SECTION A-A

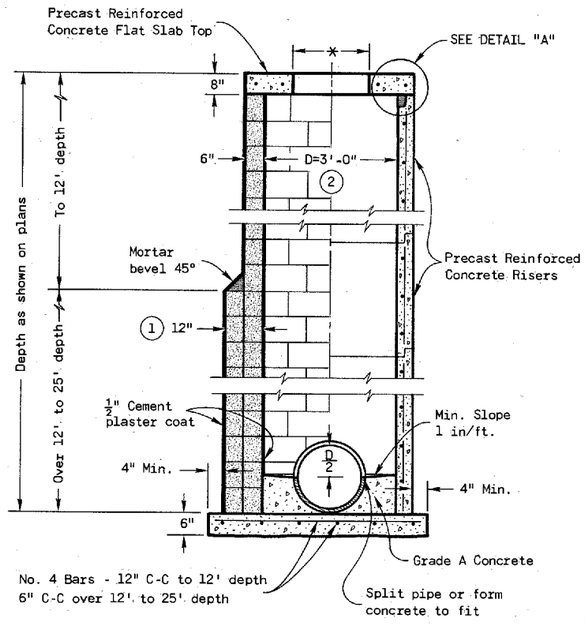

CONCRETE BLOCK ② PRECAST REINFORCED CONCRETE

MANHOLES TYPE 2

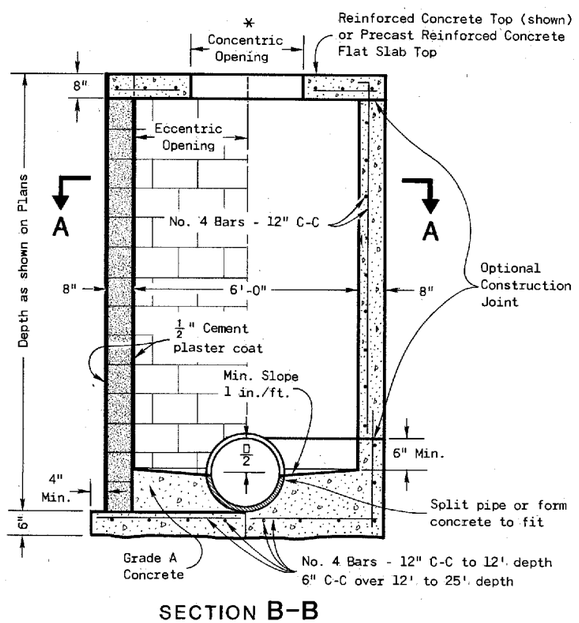

SECTION B-B

CONCRETE BLOCK REINFORCED CONCRETE

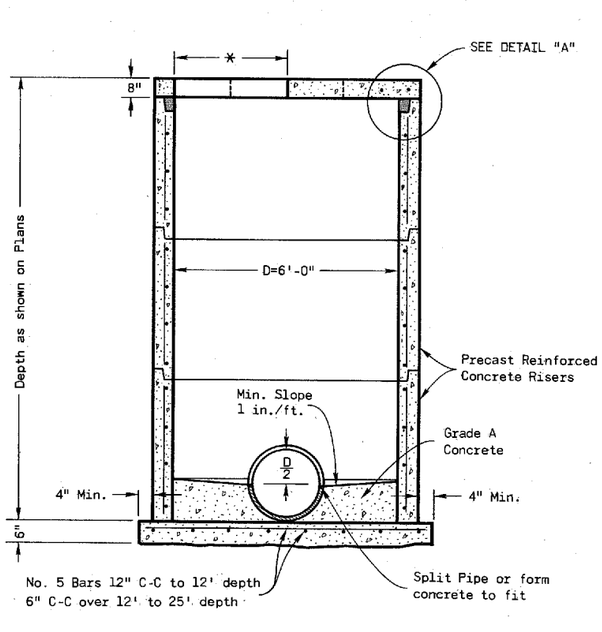

PRECAST REINFORCED CONCRETE

MANHOLES TYPE 3

GENERAL NOTES

Details of construction, materials and workmanship not shown on this drawing shall conform to the pertinent requirements of the Standard Specifications and the applicable Special Provisions.

Detailed drawings for proposed alternate designs for underground drainage structures shall be submitted to the Engineer for approval providing that such alternate designs make provision for equivalent capacity and strength.

All drainage structures are designated on the plans as "Manholes 1-C", "Catch Basins 1-B", "Inlets 3-H", etc. The first digit designates the masonry portion of the structure , and the following letter designates the type of cover to be used to comprise the complete unit.

Precast Reinforced Bases shall be placed on a bed of material at least 6" in depth, which meets the requirements for Granular Backfill. This bedding shall be compacted and provide uniform support for the entire area of the base.

Steps meeting the following requirements shall be installed in all structures over 5 feet in depth: 16 inch C-C maximum spacing; project a minimum clear distance of 4 inches from the wall at the point of embedment; minimum length of 10 inches; minimum wall embedment of 3 inches; and capable of supporting a concentrated load of 300 lbs. Ferrous metal steps not painted or treated to resist corrosion shall have a minimum cross sectional dimension of 1 inch.

Solid Aluminum steps shall have a minimum cross sectional dimension of 0.75 inch. Aluminum surfaces to be embedded in concrete shall be given one coat of suitable quality paint, such as zinc chromate primer conforming to federal specification TT-P-645 or equivalent. Steps of approved Polypropylene plastic coated reinforcement bar are acceptable.

All bar steel reinforcement shall be embedded 2 inches clear unless otherwise shown or noted.

Precast Reinforced Concrete Risers shall be placed with tongue down.

All precast inlet units shall conform to the pertinent requirements of AASHTO Designation M 199.

* Use 2'-0" diameter opening with type "C", "L", and "J" covers, or 3'-0" diameter with type "K" and "M" covers.

(1) 2 courses 6" block.

(2) When connecting pipes are 24" or larger the Precast Manholes may be increased to 42" diameter.

MANHOLES TYPE 2 & 3

State of Wisconsin
Department of Transportation

APPROVED 4-13-82 DATE
CHIEF DESIGN ENGINEER
FHWA

S.D.D. 8 B 7-3

S.D.D. 8 B 7-3

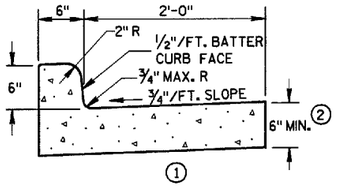

1

TYPES A & D

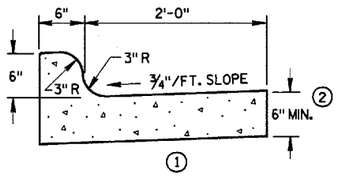

1

TYPES K & L

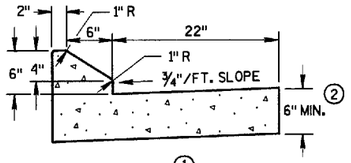

1

TYPES G & J

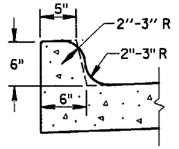

OPTIONAL CURB SHAPE

1

FOR TYPES K & L

CONCRETE CURB & GUTTER 30"

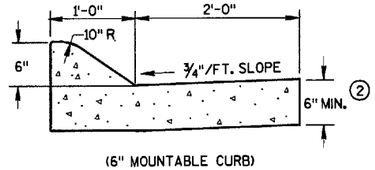

(6" MOUNTABLE CURB)

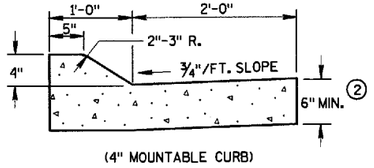

(4" MOUNTABLE CURB)

1

TYPES A & D

CONCRETE CURB & GUTTER 36"

GENERAL NOTES

DETAILS OF CONSTRUCTION, MATERIALS AND WORKMANSHIP NOT SHOWN ON THIS DRAWING SHALL CONFORM TO THE PERTINENT REQUIREMENTS OF THE CONTRACT.

PAVEMENT TIES AND TIE BARS SHALL BE EPOXY COATED IN CONFORMANCE WITH SUBSECTION 505.2.6.2 OF THE STANDARD SPECIFICATIONS.

INTEGRAL CURB & GUTTER SHALL CONFORM TO THE DETAILS SHOWN FOR CONCRETE CURB & GUTTER INCLUDING THE TRANSVERSE GUTTER SLOPE. A LONGITUDINAL CONSTRUCTION JOINT IS NOT REQUIRED WITH INTEGRAL CURB AND GUTTER.

WHERE THE TRANSVERSE JOINTS IN THE PAVEMENT ARE REQUIRED TO BE SEALED, THE JOINTS IN THE INTEGRAL CURB AND GUTTER SHALL BE SEALED TO THE FACE OF CURB WITH THE SAME TYPE OF SEALANT. THE COST OF FURNISHING AND INSTALLING THIS SEALANT SHALL BE INCIDENTAL TO THE ITEM CONCRETE CURB AND GUTTER.

UNLESS OTHERWISE SHOWN ON THE TYPICAL CROSS SECTIONS, THE BASE COURSE AND UNCLASSIFIED EXCAVATION LIMITS ARE 2'-0" BEHIND THE BACK OF CURBS.

(1) TIE BARS ARE REQUIRED FOR CURB AND GUTTER TYPES A, G AND K.

(2) THE BOTTOM OF CURB AND GUTTER MAY BE CONSTRUCTED EITHER LEVEL OR PARALLEL TO THE SLOPE OF THE SUBGRADE OR BASE COURSE PROVIDED A 6" MINIMUM GUTTER THICKNESS IS MAINTAINED.

(3) WHEN REVERSE SLOPE GUTTER IS REQUIRED, THE LOCATION(S) WILL BE SHOWN ELSEWHERE IN THE PLAN.

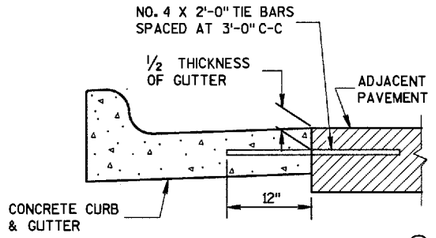

1

TYPICAL TIE BAR LOCATION

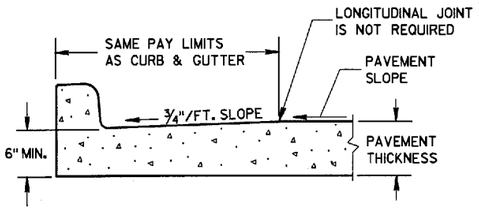

PARTIAL SECTION OF PAVEMENT WITH INTEGRAL CURB & GUTTER

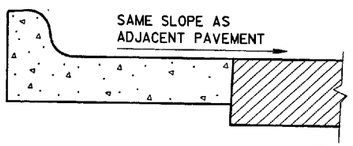

3

REVERSE SLOPE GUTTER

(TYPICAL FOR ALL CURB & GUTTER TYPES)

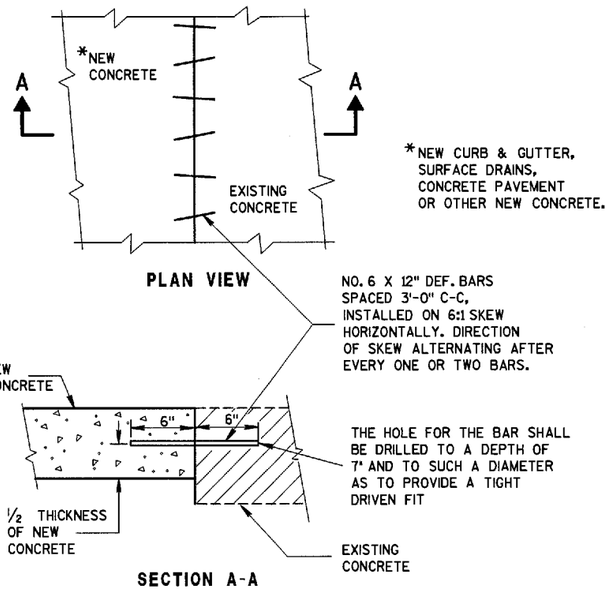

PLAN VIEW

SECTION A-A

PAVEMENT TIES

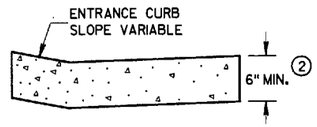

DRIVEWAY ENTRANCE CURB

(WHEN DIRECTED BY THE ENGINEER)

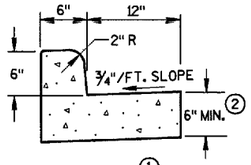

1

TYPES A & D

CONCRETE CURB & GUTTER 18"

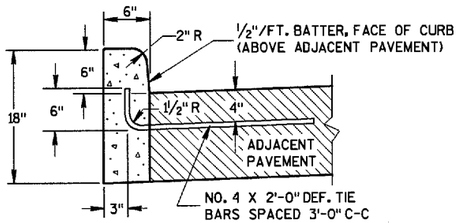

1

TYPES A & D

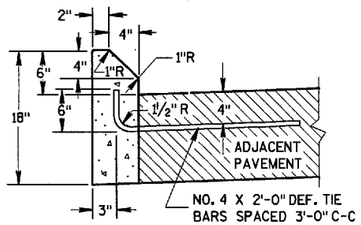

1

TYPES G & J

CONCRETE CURB

CONCRETE CURB, CONCRETE CURB & GUTTER AND PAVEMENT TIES
STATE OF WISCONSIN DEPARTMENT OF TRANSPORTATION
APPROVED 04/10/99 (DATE) Roy D. Thomas CHIEF ROADWAY DEVELOPMENT ENGINEER FHWA

S.D.D. 8 D 1-13

S.D.D. 8 D 1-13

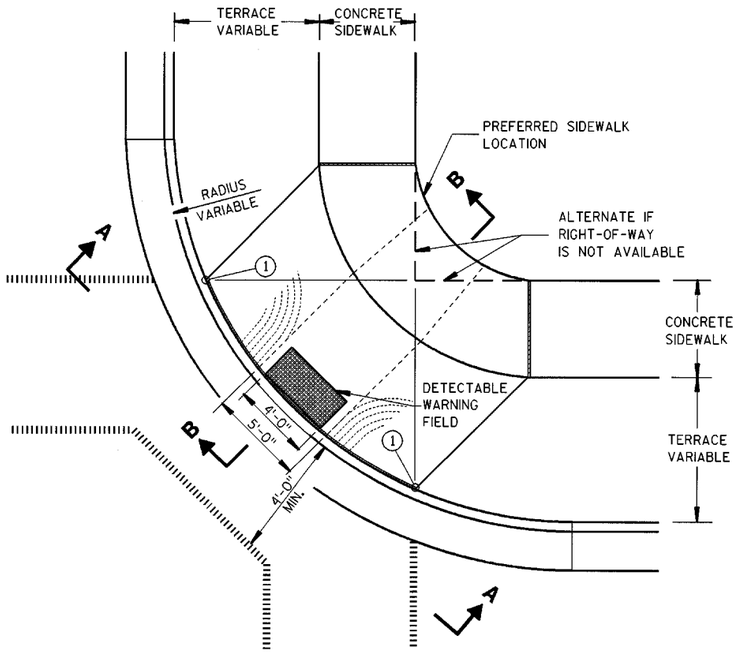

PLAN VIEW

TYPE 1 RAMP

(CENTER OF CORNER RADIUS)

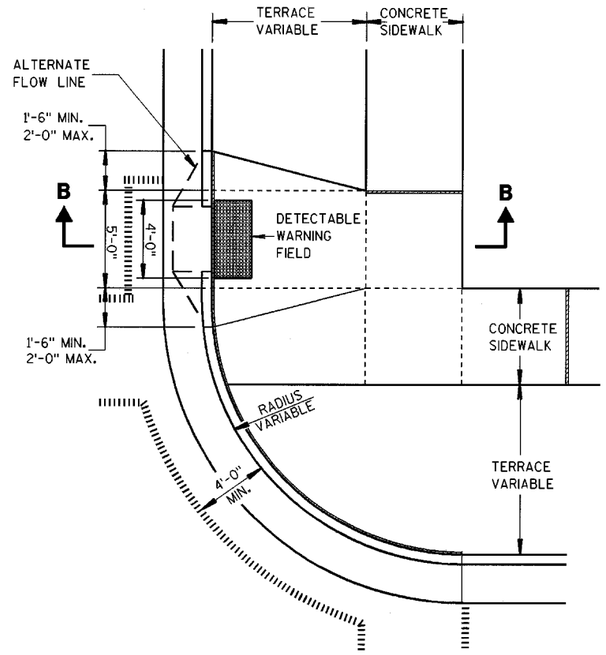

PLAN VIEW

TYPE 3 RAMP

(OUTSIDE OF CROSSWALK AREA)

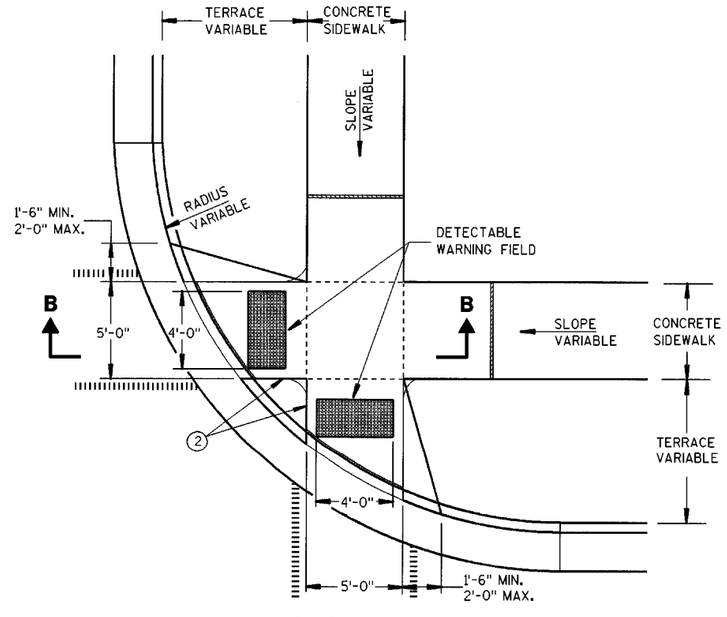

PLAN VIEW

TYPE 2 RAMP

(ON LINE WITH SIDEWALK)

GENERAL NOTES

DETAILS OF CONSTRUCTION, MATERIALS AND WORKMANSHIP NOT SHOWN ON THIS DRAWING SHALL CONFORM TO THE PERTINENT REQUIREMENTS OF THE STANDARD SPECIFICATIONS AND THE APPLICABLE SPECIAL PROVISIONS.

RAMPS SHALL BE BUILT AT 12H:1V OR FLATTER. WHEN NECESSARY, THE SIDEWALK ELEVATION MAY BE LOWERED TO MEET THE HIGH POINT ON THE RAMP.

TYPE 1 RAMPS SHALL HAVE A NORMAL SIDEWALK APRON AND CURB ON BOTH SIDES OF RAMP.

DETECTABLE WARNING FIELD SHALL BE MEASURED AND PAID BY THE SQUARE FOOT AS "CURB RAMP DETECTABLE WARNING FIELD". THE CONCRETE PEDESTRIAN CURB, IF NEEDED, SHALL BE MEASURED AND PAID BY THE LINEAL FOOT AS "CONCRETE CURB PEDESTRIAN". ALL OTHER CONCRETE SIDEWALK IN THE CURB RAMP AREA SHALL BE MEASURED AND PAID BY THE SQUARE FOOT AS CONCRETE SIDEWALK.

SELECT CURB RAMP DETECTABLE WARNING FIELD MATERIALS AND DEVICES FROM THE DEPARTMENT'S APPROVED MATERIALS LIST. THE COLOR OF THE DETECTABLE WARNING FIELD IS SPECIFIED ELSEWHERE AND IS INCIDENTAL TO THE BID ITEM OF "CURB RAMP DETECTABLE WARNING FIELD".

SURFACE TEXTURE OF THE RAMP SHALL BE OBTAINED BY COARSE BROOMING TRANSVERSE TO THE SLOPE OF THE RAMP.

USE THE TYPE 3 RAMP ONLY WHEN A TYPE 1 OR TYPE 2 CANNOT BE ACHIEVED BECAUSE OF FIELD CONDITIONS.

(1) THIS POINT IS AN EXTENSION OF OUTSIDE EDGE OF APPROACHING SIDEWALK WHERE IT MEETS THE BACK OF CONCRETE CURB.

(2) WHEN THIS DISTANCE IS LESS THAN 6'-0" IT MAY BE DIFFICULT TO ACHIEVE A 12H:1V SLOPE, OR FLATTER, ON THE RAMP. REDUCE CURB HEIGHT IN TRIANGLE AREA TO ACHIEVE 12H:1V SLOPE, OR FLATTER, ON RAMP. 2" MINIMUM CURB HEIGHT.

LEGEND

- ½" EXPANSION JOINT-SIDEWALK
- CONTRACTION JOINT FIELD LOCATED
- PAVEMENT MARKING CROSSWALK (WHITE)
- ALTERNATIVE LAYOUT

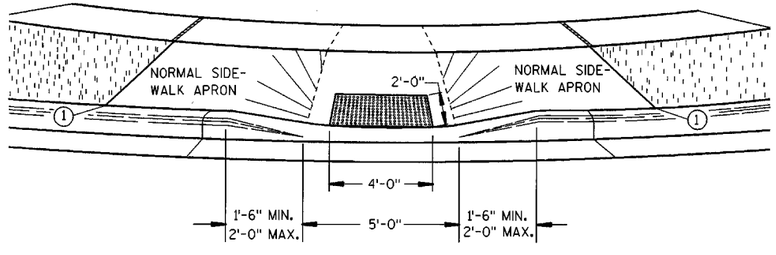

VIEW A-A

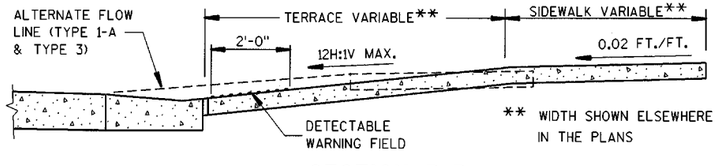

SECTION B-B

CURB RAMPS
TYPES 1, 2 AND 3

STATE OF WISCONSIN
DEPARTMENT OF TRANSPORTATION

6

S.D.D. 8 D 5-9a

S.D.D. 8 D 5-9a

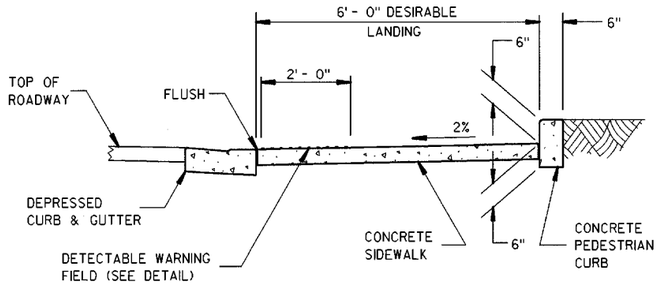

SECTION C-C

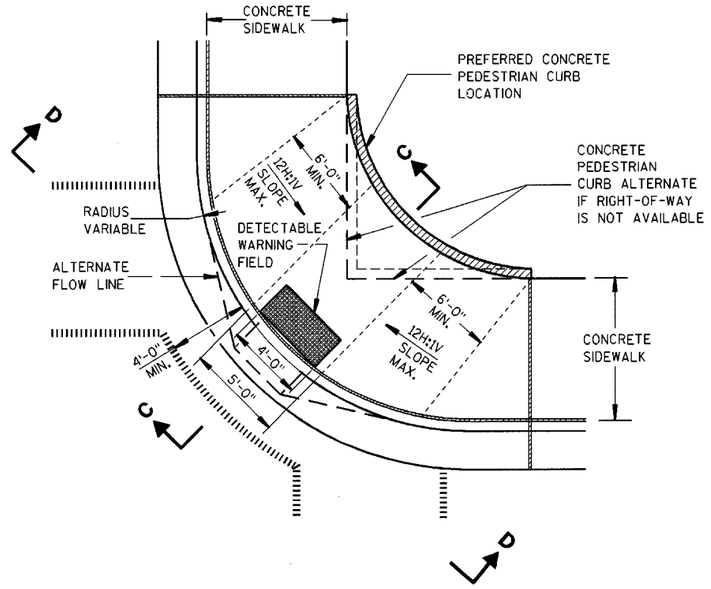

PLAN VIEW

TYPE 1-A RAMP

(NO TERRACE)

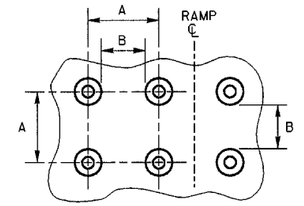

PLAN VIEW

	MIN.	MAX.
A	1.6"	2.4"
B	0.65"	1.5"
C	*	*
D	0.9"	1.4"

* THE C DIMENSION IS 50% TO 65% OF THE D DIMENSION.

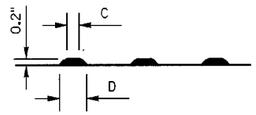

ELEVATION VIEW

TRUNCATED DOMES
DETECTABLE WARNING PATTERN DETAIL

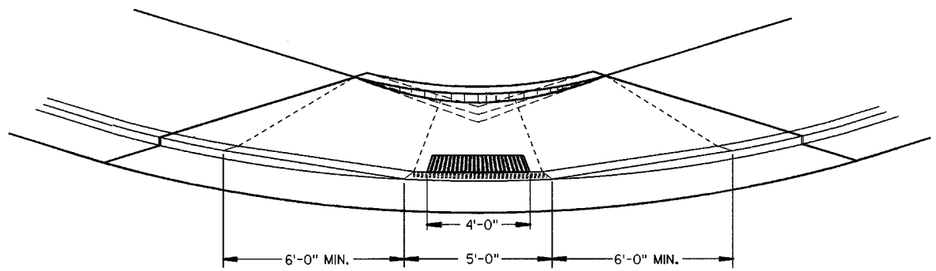

VIEW D-D

LEGEND

- ½" EXPANSION JOINT-SIDEWALK
- CONTRACTION JOINT FIELD LOCATED
- PAVEMENT MARKING CROSSWALK (WHITE)
- ALTERNATIVE LAYOUT

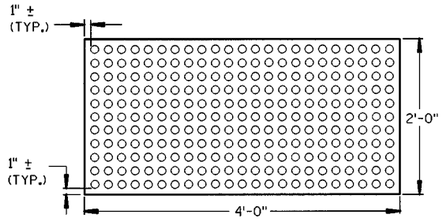

PLAN VIEW

DETECTABLE WARNING FIELD (TYPICAL)

CURB RAMPS
TYPE 1-A

STATE OF WISCONSIN
DEPARTMENT OF TRANSPORTATION

APPROVED
6/25/03
DATE

CHIEF ROADWAY DEVELOPMENT ENGINEER

FHWA

6

S.D.D. 8 D 5-9b

S.D.D. 8 D 5-9b

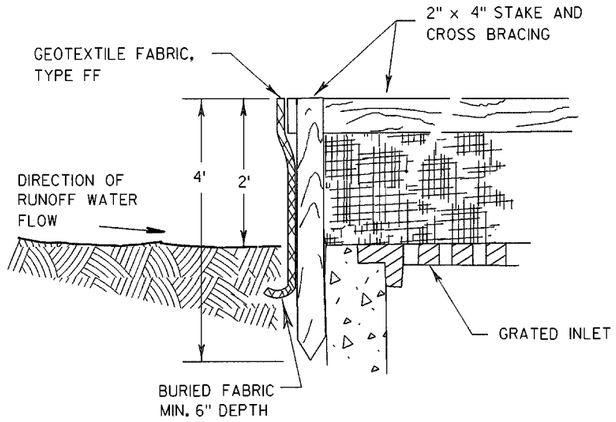

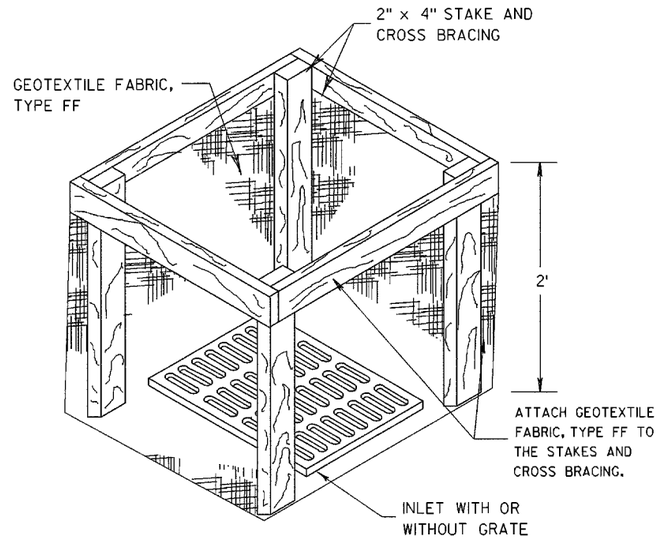

INLET PROTECTION, TYPE A

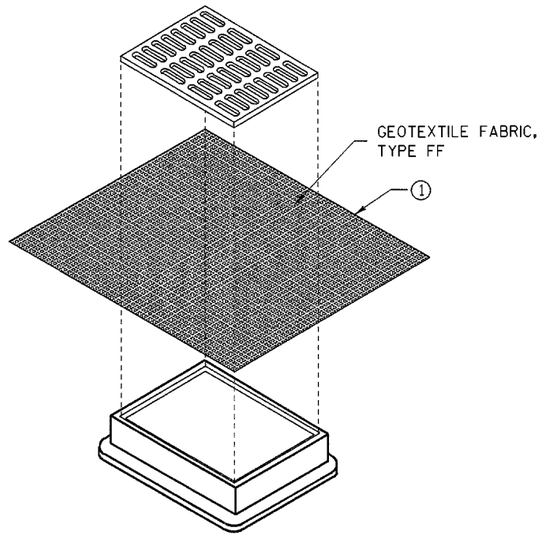

INLET PROTECTION, TYPE B (WITHOUT CURB BOX)

(CAN BE INSTALLED IN ANY INLET WITHOUT A CURB BOX)

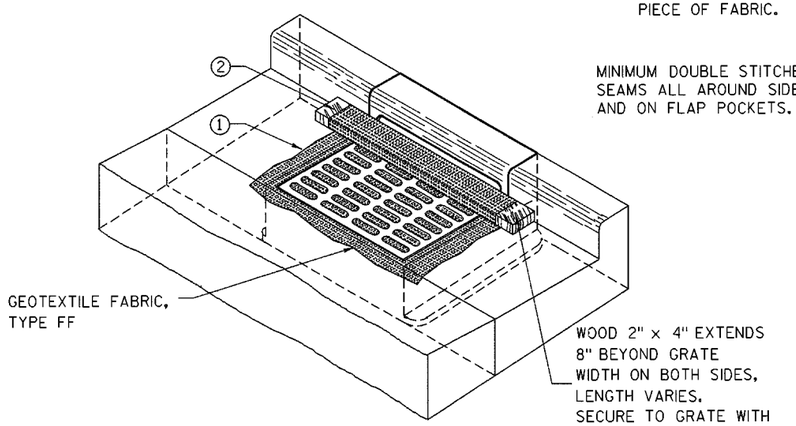

INLET PROTECTION, TYPE C (WITH CURB BOX)

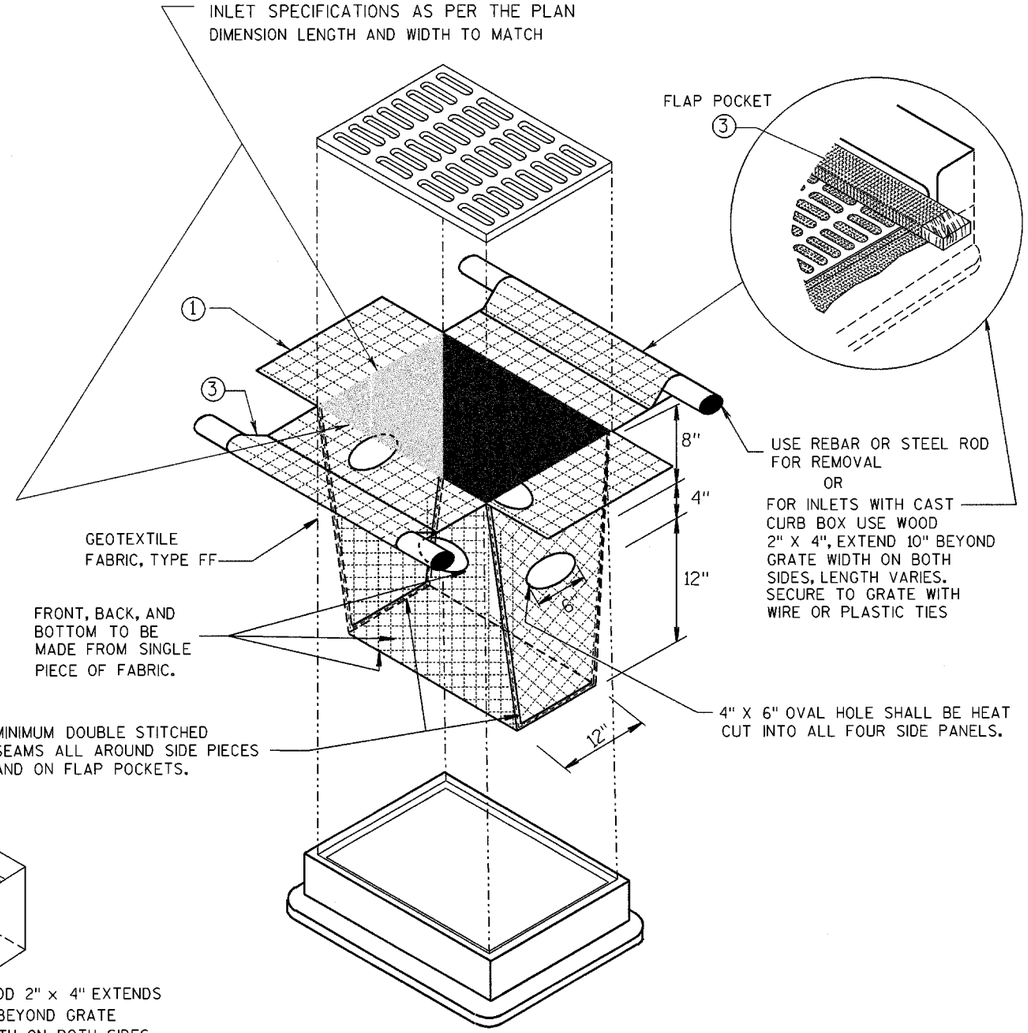

INLET PROTECTION, TYPE D

(CAN BE INSTALLED IN ANY INLET TYPE WITH OR WITHOUT A CURB BOX AS PER NOTE ②)

GENERAL NOTES

INLET PROTECTION DEVICES SHALL BE MAINTAINED OR REPLACED AT THE DIRECTION OF THE ENGINEER.

MANUFACTURED ALTERNATIVES APPROVED AND LISTED ON THE DEPARTMENT'S EROSION CONTROL PRODUCT ACCEPTABILITY LIST MAY BE SUBSTITUTED.

WHEN REMOVING OR MAINTAINING INLET PROTECTION, CARE SHALL BE TAKEN SO THAT THE SEDIMENT TRAPPED ON THE GEOTEXTILE FABRIC DOES NOT FALL INTO THE INLET. ANY MATERIAL FALLING INTO THE INLET SHALL BE REMOVED IMMEDIATELY.

① FINISHED SIZE, INCLUDING FLAP POCKETS WHERE REQUIRED, SHALL EXTEND A MINIMUM OF 10" AROUND THE PERIMETER TO FACILITATE MAINTENANCE OR REMOVAL.

② FOR INLET PROTECTION, TYPE C (WITH CURB BOX), AN ADDITIONAL 18" OF FABRIC IS WRAPPED AROUND THE WOOD AND SECURED WITH STAPLES. THE WOOD SHALL NOT BLOCK THE ENTIRE HEIGHT OF THE CURB BOX OPENING.

③ FLAP POCKETS SHALL BE LARGE ENOUGH TO ACCEPT WOOD 2X4.

INSTALLATION NOTES

TYPE B & C

TRIM EXCESS FABRIC IN THE FLOW LINE TO WITHIN 3" OF THE GRATE.

THE CONTRACTOR SHALL DEMONSTRATE A METHOD OF MAINTENANCE, USING A SEWN FLAP, HAND HOLDS OR OTHER METHOD TO PREVENT ACCUMULATED SEDIMENT FROM ENTERING THE INLET.

TYPE D

DO NOT INSTALL INLET PROTECTION TYPE D IN INLETS SHALLOWER THAN 30", MEASURED FROM THE BOTTOM OF THE INLET TO THE TOP OF THE GRATE.

TRIM EXCESS FABRIC IN THE FLOW LINE TO WITHIN 3" OF THE GRATE.

THE INSTALLED BAG SHALL HAVE A MINIMUM SIDE CLEARANCE, BETWEEN THE INLET WALLS AND THE BAG, MEASURED AT THE BOTTOM OF THE OVERFLOW HOLES, OF 3". WHERE NECESSARY THE CONTRACTOR SHALL CINCH THE BAG, USING PLASTIC ZIP TIES, TO ACHIEVE THE 3" CLEARANCE. THE TIES SHALL BE PLACED AT A MAXIMUM OF 4" FROM THE BOTTOM OF THE BAG.

INLET PROTECTION
TYPE A, B, C, AND D

STATE OF WISCONSIN
DEPARTMENT OF TRANSPORTATION

APPROVED
10/16/02
DATE

CHIEF ROADWAY DEVELOPMENT ENGINEER

FHWA

6

S.D.D. 8 E 10-2

S.D.D. 8 E 10-2

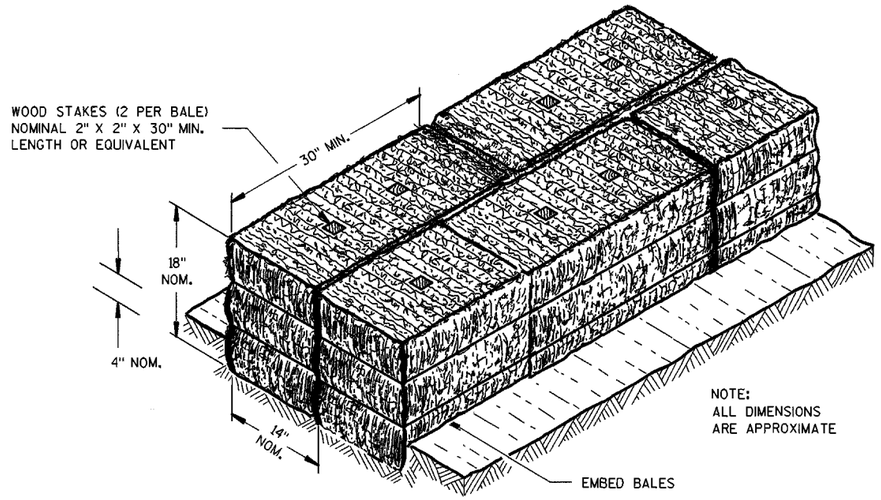

SECTION A-A

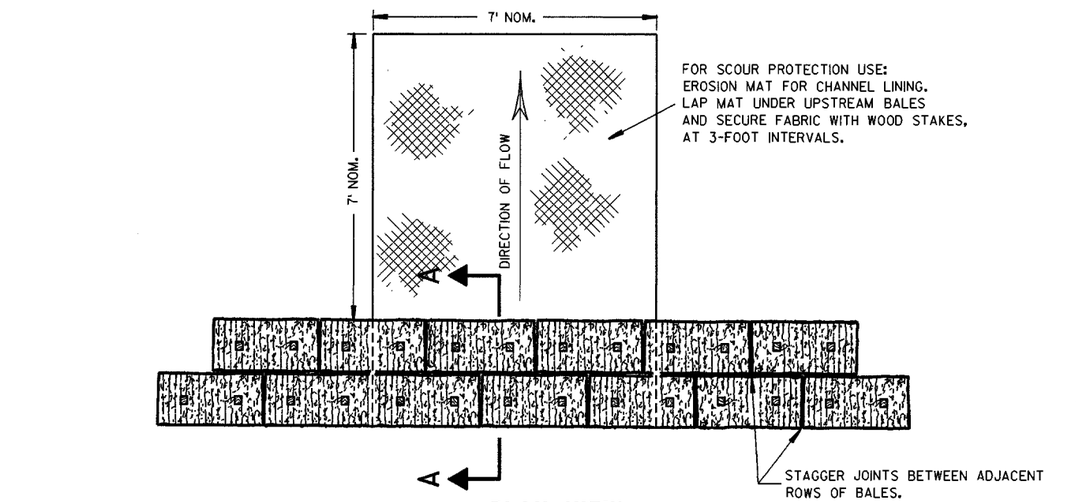

PLAN VIEW

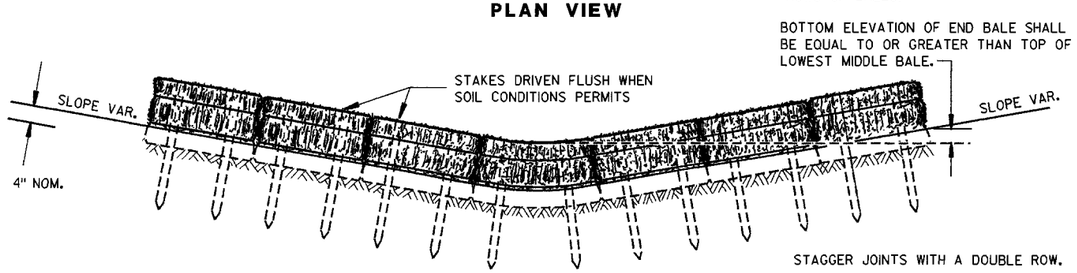

FRONT ELEVATION

TEMPORARY DITCH CHECK USING EROSION BALES (1)

S.D.D. 8 E 8-3

GENERAL NOTES

DETAILS OF CONSTRUCTION, MATERIALS AND WORKMANSHIP NOT SHOWN ON THIS DRAWING SHALL CONFORM TO THE PERTINENT REQUIREMENTS OF THE STANDARD SPECIFICATIONS AND THE APPLICABLE SPECIAL PROVISIONS.

(1) TEMPORARY DITCH CHECKS EITHER EROSION BALES OR MANUFACTURED SHALL BE PAID FOR UNDER THE BID ITEM OF TEMPORARY DITCH CHECK. THE DEPARTMENT WILL NOT PAY FOR TEMPORARY DITCH CHECKS CONSTRUCTED OF A SINGLE ROW OF EROSION BALES.

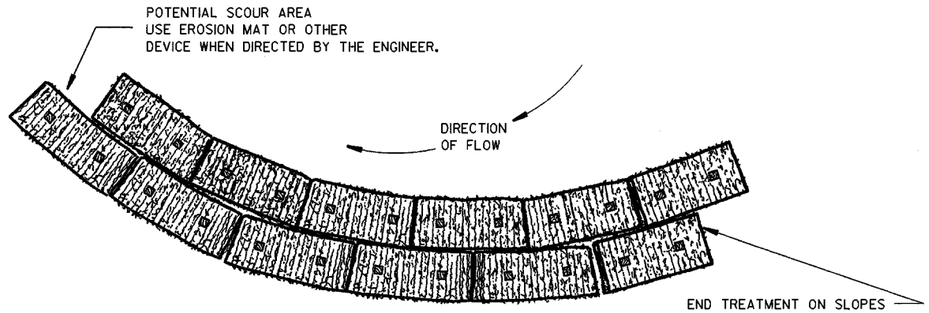

PLAN VIEW

WHEN ALTERING THE DIRECTION OF FLOW

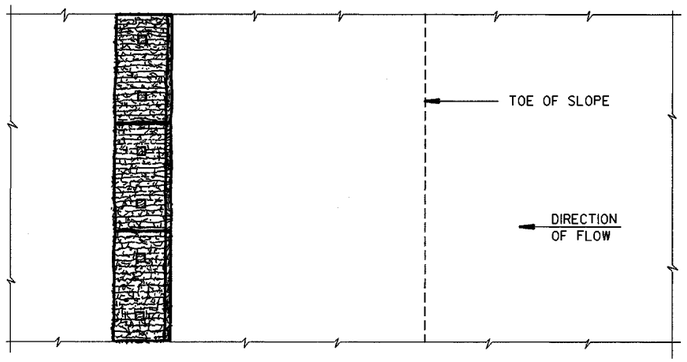

PLAN VIEW

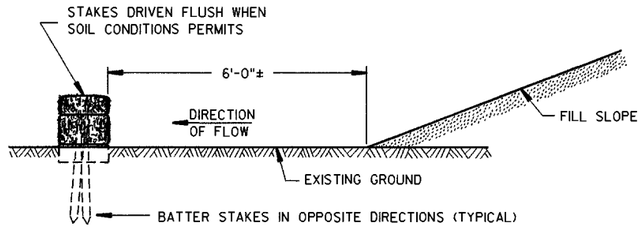

FRONT ELEVATION

WHEN EXISTING GROUND SLOPES AWAY FROM FILL SLOPE

EROSION BALES FOR SHEET FLOW

TYPICAL INSTALLATIONS OF EROSION BALES / TEMPORARY DITCH CHECKS

STATE OF WISCONSIN
DEPARTMENT OF TRANSPORTATION

APPROVED 6/4/02 DATE
CHIEF ROADWAY DEVELOPMENT ENGINEER
FHWA

S.D.D. 8 E 8-3

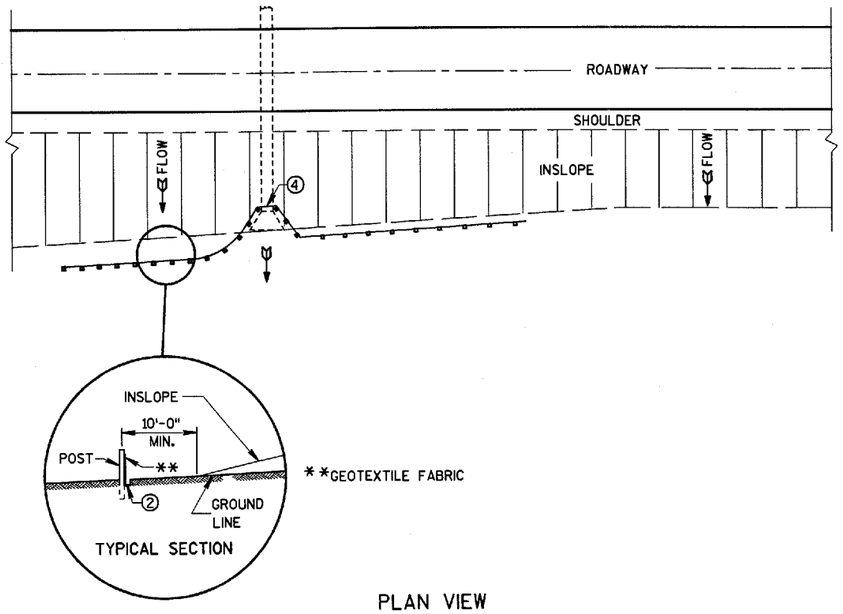

PLAN VIEW

TYPICAL APPLICATION OF SILT FENCE

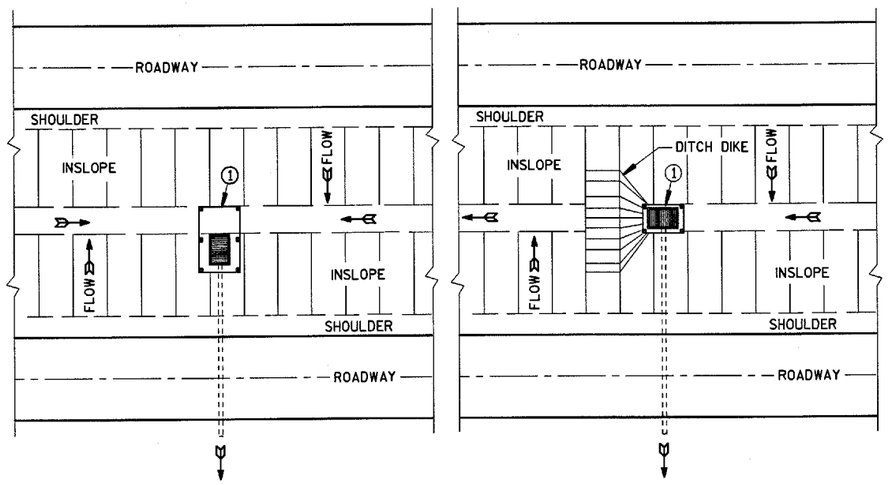

SITUATION 1

SITUATION 2

PLAN VIEW

SILT FENCE AT MEDIAN SURFACE DRAINS

GENERAL NOTES

DETAILS OF CONSTRUCTION NOT SHOWN ON THIS DRAWING SHALL CONFORM TO THE PERTINENT REQUIREMENTS OF THE STANDARD SPECIFICATIONS AND APPLICABLE SPECIAL PROVISIONS.

① HORIZONTAL BRACE REQUIRED WITH 2" X 4" WOODEN FRAME OR EQUIVALENT AT TOP OF POSTS.

② TRENCH SHALL BE A MINIMUM OF 4" WIDE & 6" DEEP TO BURY AND ANCHOR THE GEOTEXTILE FABRIC. FOLD MATERIAL TO FIT TRENCH AND BACKFILL & COMPACT TRENCH WITH EXCAVATED SOIL.

③ WOOD POSTS SHALL BE A MINIMUM SIZE OF 1⅛" X 1⅛" OF OAK OR HICKORY.

④ SILT FENCE TO EXTEND ACROSS THE TOP OF THE PIPE.

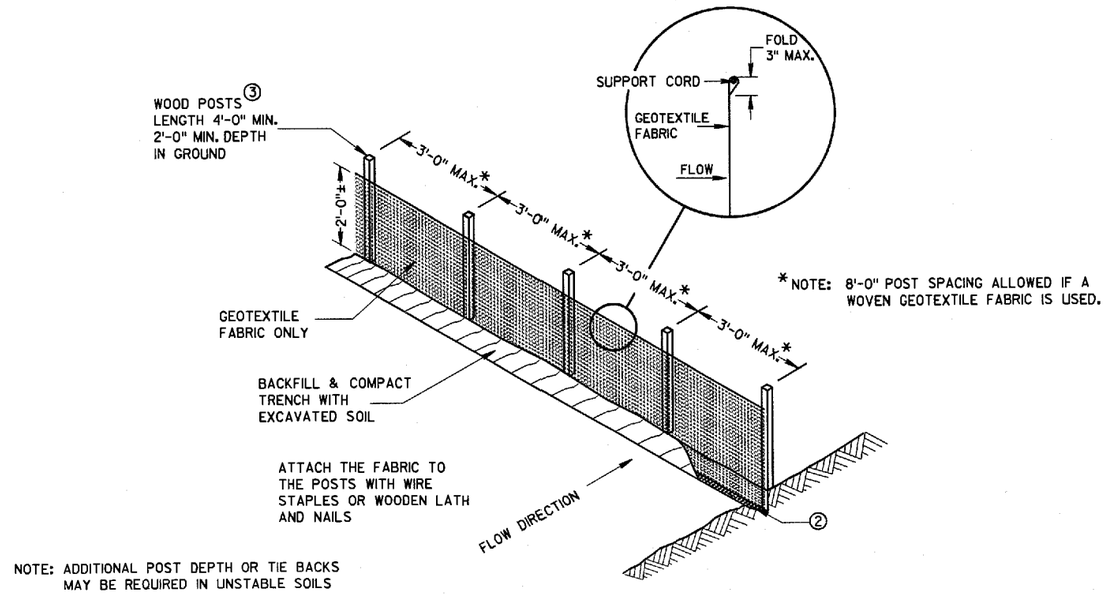

*NOTE: 8'-0" POST SPACING ALLOWED IF A WOVEN GEOTEXTILE FABRIC IS USED.

NOTE: ADDITIONAL POST DEPTH OR TIE BACKS MAY BE REQUIRED IN UNSTABLE SOILS

SILT FENCE

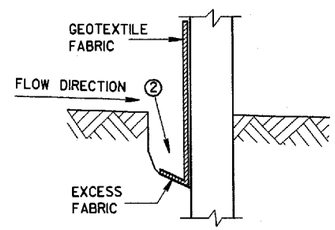

TRENCH DETAIL

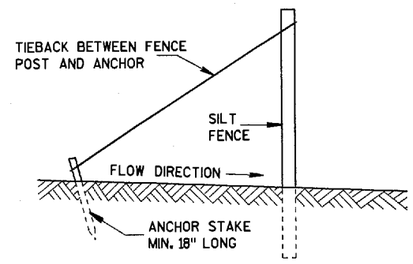

SILT FENCE TIE BACK

(WHEN REQUIRED BY THE ENGINEER)

SILT FENCE
STATE OF WISCONSIN DEPARTMENT OF TRANSPORTATION
APPROVED 03/06/00 DATE — CHIEF ROADWAY DEVELOPMENT ENGINEER FHWA

S.D.D. 8 E 9-5

METAL APRON ENDWALLS

PIPE DIA. (IN.)	MIN. THICK. (Inches) STEEL	MIN. THICK. (Inches) ALUM.	DIMENSIONS (Inches) A (±1")	B (MAX.)	H (±1")	L (±1 1/2")	L1 ①	L2 ①	W (±2")	APPROX. SLOPE	BODY
12	.064	.060	6	6	6	21	12	17 1/2	24	2 1/2 to 1	1 Pc.
15	.064	.060	7	8	6	26	14	21 3/4	30	2 1/2 to 1	1 Pc.
18	.064	.060	8	10	6	31	15	28 1/4	36	2 1/2 to 1	1 Pc.
21	.064	.060	9	12	6	36	18	29 5/8	42	2 1/2 to 1	1 Pc.
24	.064	.075	10	13	6	41	18	37 1/4	48	2 1/2 to 1	1 Pc.
30	.079	.075	12	16	8	51	18	52 1/4	60	2 1/2 to 1	1 Pc.
36	.079	.105	14	19	9	60	24	59 3/4	72	2 1/2 to 1	2 Pc.
42	.109	.105	16	22	11	69	24	75 5/8	84	2 1/2 to 1	2 Pc.
48	.109	.105	18	27	12	78	24	81	90	2 1/4 to 1	3 Pc.
54	.109	.105	18	30	12	84	30	85 1/2	102	2 1/4 to 1	3 Pc.
60	.109×	.105×	18	33	12	87	—	—	114	2 to 1	3 Pc.
66	.109×	.105×	18	36	12	87	—	—	120	2 to 1	3 Pc.
72	.109×	.105×	18	39	12	87	—	—	126	2 to 1	3 Pc.
78	.109×	.105×	18	42	12	87	—	—	132	1 1/2 to 1	3 Pc.
84	.109×	.105×	18	45	12	87	—	—	138	1 1/2 to 1	3 Pc.
90	.109×	.105×	18	37	12	87	—	—	144	1 1/2 to 1	3 Pc.
96	.109×	.105×	18	35	12	87	—	—	150	1 1/2 to 1	3 Pc.

× EXCEPT CENTER PANEL SEE GENERAL NOTES

REINFORCED CONCRETE APRON ENDWALLS

PIPE DIA. (IN.)	DIMENSIONS (Inches) T	A	B	C	D	E	G	APPROX. SLOPE
12	2	4	24	48 7/8	72 7/8	24	2	3 to 1
15	2 1/4	6	27	46	73	30	2 1/4	3 to 1
18	2 1/2	9	27	46	73	36	2 1/2	3 to 1
21	2 3/4	9	36	37 1/2	73 1/2	42	2 3/4	3 to 1
24	3	9 1/2	43 1/2	30	73 1/2	48	3	3 to 1
27	3 1/4	10 1/2	49 1/2	24	73 1/2	54	3 1/4	3 to 1
30	3 1/2	12	54	19 3/4	73 1/2	60	3 1/2	3 to 1
36	4	15	63	34 3/4	97 3/4	72	4	3 to 1
42	4 1/2	21	63	35	98	78	4 1/2	3 to 1
48	5	24	72	26	98	84	5	3 to 1
54	5 1/2	27	65	* 33 1/4 - ** 35	* 98 1/4 - ** 100	90	5 1/2	2 2/3 to 1
60	6	* 30 - ** 35	60	39	99	96	5	2 to 1
66	6 1/2	* 24 - ** 30	* 72 - ** 78	* 21 - ** 27	99	102	5 1/2	2 to 1
72	7	* 24 - ** 36	78	21	99	108	6	2 to 1
78	7 1/2	* 24 - ** 36	78	21	99	114	6 1/2	2 to 1
84	8	36	90 1/2	21	111 1/2	120	6 1/2	1 1/2 to 1
90	8 1/2	41	87 1/2	24	111 1/2	132	6 1/2	1 1/2 to 1

*MINIMUM
**MAXIMUM

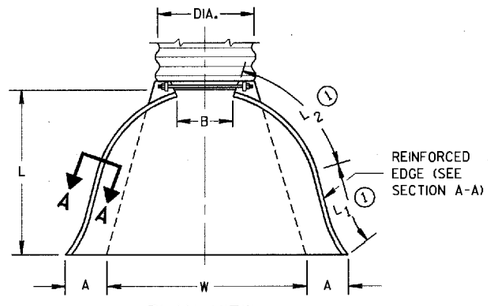

PLAN VIEW

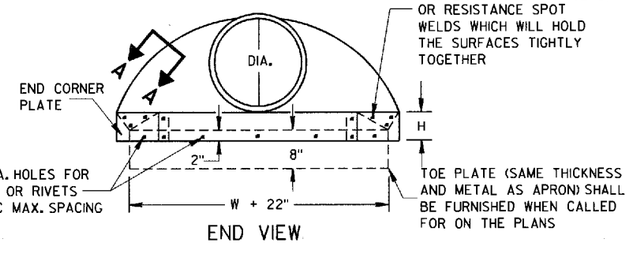

END VIEW

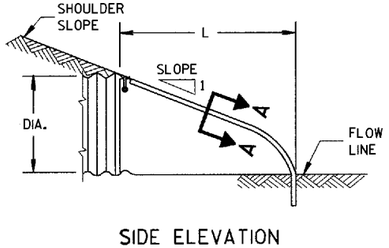

SIDE ELEVATION

METAL ENDWALLS

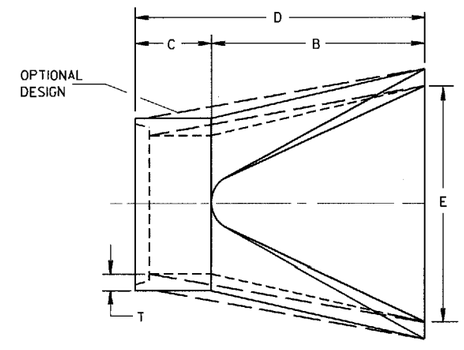

PLAN

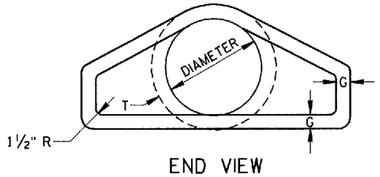

END VIEW

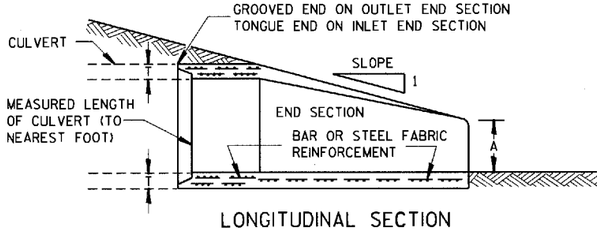

LONGITUDINAL SECTION

CONCRETE ENDWALLS

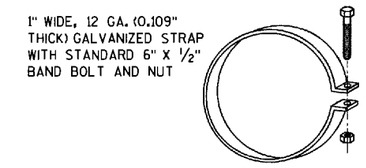

ALTERNATE FOR TYPE 1 CONNECTION

END SECTION CONNECTOR STRAP

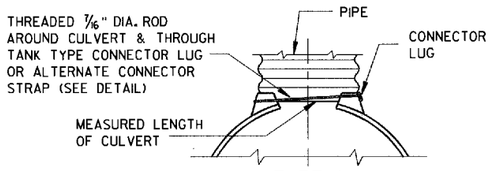

TYPE 1
FOR 12" THRU 24" CORR. PIPE

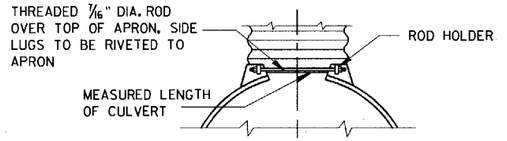

TYPE 2
FOR 30" THRU 96" CORR. PIPE

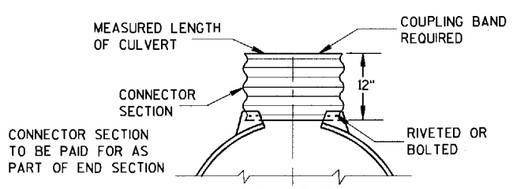

TYPE 3
FOR 42" THRU 96" CORR. PIPE

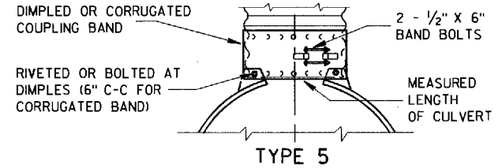

TYPE 5
ALTERNATE FOR:
ALL SIZES CORRUGATED CIRCULAR PIPE

NOTE: DIMPLED BAND FITS OVER OUTSIDE OF ENDWALL, AND CORRUGATED BAND FITS INSIDE ENDWALL. DIMPLED BAND MAY BE USED WITH HELICALLY CORRUGATED PIPE.

FOR CIRCUMFERENTIALLY CORRUGATED PIPE USE ENDWALL CONNECTION DETAILS 1, 2, 3 OR 5 AS APPLICABLE.

FOR HELICALLY CORRUGATED PIPE USE ENDWALL CONNECTION DETAILS 1, 2 OR 5.

FOR HELICALLY CORRUGATED PIPES WITH TWO CIRCUMFERENTIAL CORRUGATIONS AT EACH END USE ENDWALL CONNECTION DETAILS 1, 2 OR 3.

CONNECTION DETAILS

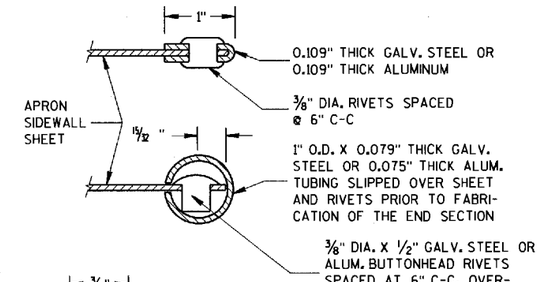

SECTION A-A

GENERAL NOTES

DETAILS OF CONSTRUCTION, MATERIALS AND WORKMANSHIP NOT SHOWN ON THIS DRAWING SHALL CONFORM TO THE PERTINENT REQUIREMENTS OF THE STANDARD SPECIFICATIONS AND THE APPLICABLE SPECIAL PROVISIONS.

CONCRETE CULVERT ENDWALLS MAY NOT BE USED WITH GALVANIZED STEEL OR ALUMINUM CULVERT PIPE OR VISE VERSA. GALVANIZED STEEL OR ALUMINUM ENDWALLS SHALL NORMALLY BE INSTALLED ON CULVERT PIPE OF THE SAME METAL.

ALL THREE PIECE STEEL APRON ENDWALLS FOR 60" DIAMETER PIPE AND LARGER SHALL HAVE 0.109" SIDES AND 0.138" CENTER PANELS. ALL THREE PIECE ALUMINUM APRON ENDWALLS FOR 60" DIAMETER PIPE AND LARGER SHALL HAVE 0.105" SIDES AND 0.134" CENTER PANELS. THE WIDTH OF CENTER PANELS SHALL BE GREATER THAN 20 PERCENT OF THE PIPE PERIMETER.

LAP SEAMS SHALL BE TIGHTLY JOINED BY GALVANIZED RIVETS OR BOLTS FOR STEEL UNITS AND ALUMINUM RIVETS AND BOLTS FOR ALUMINUM UNITS. FOR THE 60" THROUGH 96" DIAMETER APRON ENDWALL SIZES, THE REINFORCED EDGES AND CENTER PANEL SEAMS SHALL BE FURTHER REINFORCED WITH GALVANIZED STEEL OR ALUMINUM STIFFENER ANGLES. THE ANGLES SHALL BE ATTACHED BY GALVANIZED NUTS AND BOLTS FOR STEEL UNITS AND ALUMINUM NUTS AND BOLTS FOR ALUMINUM UNITS.

WHERE TWO OR MORE PIPES WITH APRON ENDWALLS ARE LAID ADJACENT TO EACH OTHER, THEY SHALL BE SEPARATED BY A DISTANCE SUFFICIENT TO PROVIDE A MINIMUM CLEARANCE OF 6 INCHES BETWEEN APRON ENDWALLS.

① FOR PIPE SIZES UP TO 60" DIAMETER, A 180° ROLLED EDGE MAY BE USED INSTEAD OF STEEL ROD REINFORCEMENT. SEE SECTION A-A.

APRON ENDWALLS FOR CULVERT PIPE

STATE OF WISCONSIN
DEPARTMENT OF TRANSPORTATION

APPROVED
11/30/94
DATE

Roger L. Hinegardner
CHIEF ROADWAY DEVELOPMENT ENGINEER

FHWA

S.D.D. 8 F 1-11

S.D.D. 8 F 1-11

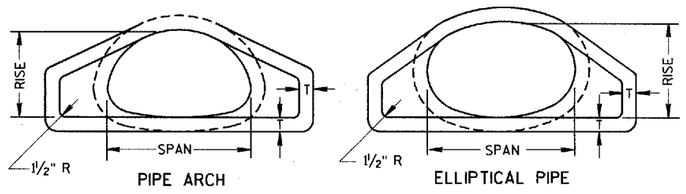

END VIEW

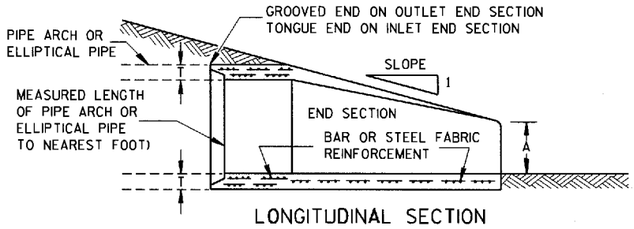

LONGITUDINAL SECTION

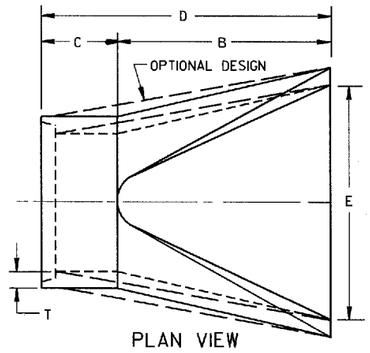

PLAN VIEW

CONCRETE ENDWALLS

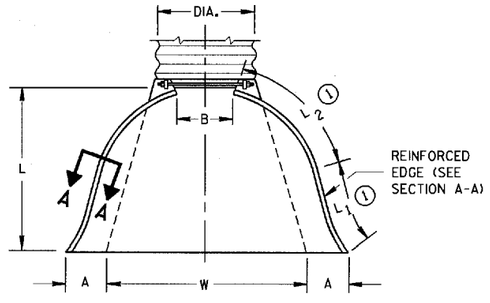

PLAN VIEW

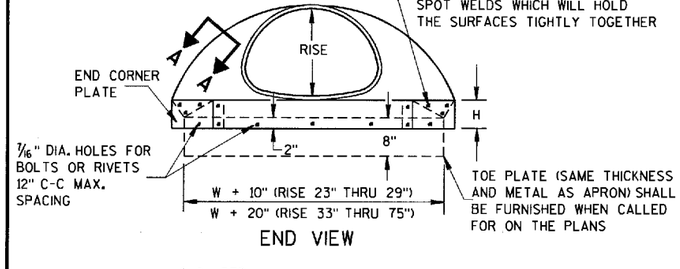

END VIEW

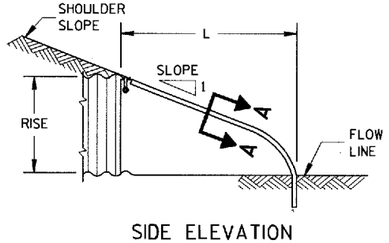

SIDE ELEVATION

METAL ENDWALLS

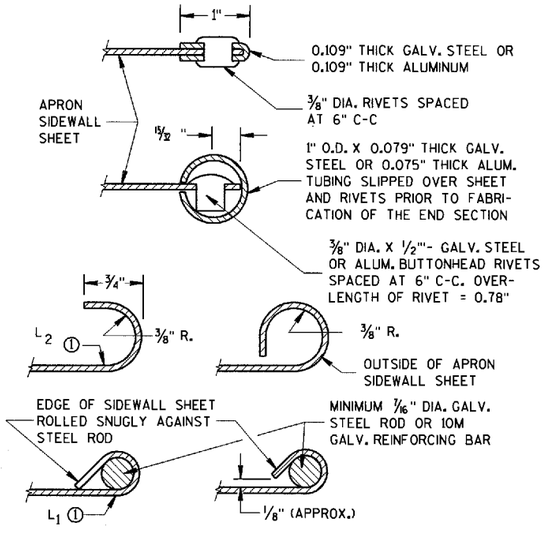

SECTION A-A

2- 2/3" X 1/2" CORRUGATIONS

EQUIV. DIA. (Inches)	(Inches) SPAN	(Inches) RISE	MIN. THICK. (Inches) STEEL	MIN. THICK. (Inches) ALUM.	DIMENSIONS (Inches) A (±1")	B (MAX.)	H (±1")	L (±1 1/2")	L1 ①	L2 ①	W (±2")	APPROX. SLOPE	BODY
15	17	13	.064	.060	7	9	6	19	14	16	30	2½ to 1	1 Pc.
18	21	15	.064	.060	7	10	6	23	14	19 3/8	36	2½ to 1	1 Pc.
21	24	18	.064	.060	8	12	6	28	18	21¾	42	2½ to 1	1 Pc.
24	28	20	.064	.060	9	14	6	32	18	27½	48	2½ to 1	1 Pc.
30	35	24	.079	.075	10	16	6	39	18	37 5/8	60	2½ to 1	1 Pc.
36	42	29	.079	.075	12	18	8	46	24	45 3/8	75	2½ to 1	1 Pc.
42	49	33	.109	.105	13	21	9	53	24	54¾	85	2½ to 1	2 Pc.
48	57	38	.109	.105	18	26	12	63	24	68	90	2½ to 1	3 Pc.
54	64	43	.109	.105	18	30	12	70	24	72¾	102	2¼ to 1	3 Pc.
60	71	47	.109*	.105*	18	33	12	77	30	82¼	114	2¼ to 1	3 Pc.
66	77	52	.109*	.105*	18	36	12	77	—	—	126	2 to 1	3 Pc.
72	83	57	.109*	.105*	18	39	12	77	—	—	138	2 to 1	3 Pc.

3" X 1" CORRUGATIONS

EQUIV. DIA. (Inches)	(Inches) SPAN	(Inches) RISE	MIN. THICK. (Inches) STEEL	MIN. THICK. (Inches) ALUM.	DIMENSIONS (Inches) A (±1")	B (MAX.)	H (±1")	L (±1 1/2")	L1 ①	L2 ①	W (±2")	APPROX. SLOPE	BODY
48	53	41	.109	.105	18	26	12	63	24	72¾	90	2½ to 1	2 Pc.
54	60	46	.109	.105	18	30	12	70	30	82¼	102	2 to 1	2 Pc.
60	66	51	.109*	.105*	18	33	12	77	—	—	114	1½ to 1	3 Pc.
66	73	55	.109*	.105*	18	36	12	77	—	—	126	1½ to 1	3 Pc.
72	81	59	.109*	.105*	18	39	12	77	—	—	138	2 to 1	3 Pc.
78	87	63	.109*	.105*	22	38	12	77	—	—	148	1½ to 1	3 Pc.
84	95	67	.109*	.105*	22	34	12	77	—	—	162	1½ to 1	3 Pc.
90	103	71	.109*	.105*	22	38	12	77	—	—	174	1½ to 1	3 Pc.
96	112	75	.109*	.105*	24	40	12	77	—	—	174	1½ to 1	3 Pc.

NOTE: ALL SPLICES TO BE LAP RIVETED OR BOLTED.

* EXCEPT CENTER PANEL SEE GENERAL NOTES

REINFORCED CONCRETE PIPE ARCH

EQUIV. DIA. (Inches)	DIMENSIONS (Inches) ** SPAN	** RISE	T	A	B	C	D	E	APPROX. SLOPE
24	29	18	3	8½	39	33	72	48	3 to 1
30	36	22	3½	9½	50	46	96	60	3 to 1
36	44	27	4	11 1/8	60	36	96	72	3 to 1
42	51	31	4½	15 13/16	60	36	96	78	3 to 1
48	58	36	5	21	60	36	96	84	3 to 1
54	65	40	5½	25½	60	36	96	90	3 to 1
60	73	45	6	31	60	36	96	96	3 to 1
72	88	54	7	31	60	39	99	120	2 to 1
84	102	62	8	28½	83	19	102	144	2 to 1

REINFORCED CONCRETE ELLIPTICAL PIPE

EQUIV. DIA. (Inches)	DIMENSIONS (Inches) ** SPAN	** RISE	T	A	B	C	D	E	APPROX. SLOPE
24	30	19	3¼	8½	39	33	72	48	3 to 1
30	38	24	3¾	9½	54	18	72	60	3 to 1
36	45	29	4½	11⅛	60	24	84	72	2½ to 1
42	53	34	5	15¾	60	36	96	78	2½ to 1
48	60	38	5½	21	60	36	96	84	2½ to 1
54	68	43	6	25½	60	36	96	90	2½ to 1
60	76	48	6½	30	60	36	96	96	2½ to 1

**NOMINAL SIZE

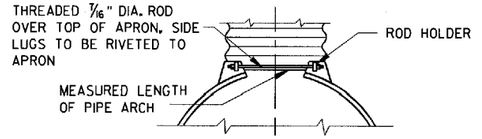

TYPE 2

FOR 17" X 13" THRU 112" X 75" PIPE ARCH

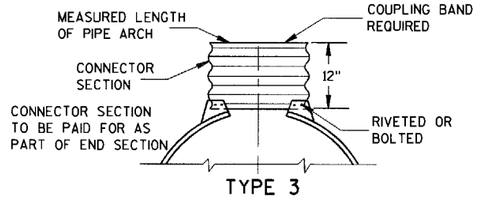

TYPE 3

FOR 64" X 43" THRU 112" X 75" PIPE ARCH

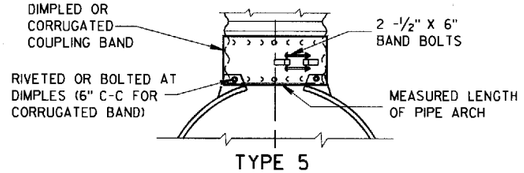

TYPE 5

ALTERNATE FOR:

ALL SIZES CORRUGATED PIPE ARCHES

NOTE: DIMPLED BAND FITS OVER OUTSIDE OF ENDWALL, AND CORRUGATED BAND FITS INSIDE ENDWALL.

CONNECTION DETAILS

GENERAL NOTES

DETAILS OF CONSTRUCTION, MATERIALS AND WORKMANSHIP NOT SHOWN ON THIS DRAWING SHALL CONFORM TO THE PERTINENT REQUIREMENTS OF THE STANDARD SPECIFICATIONS AND THE APPLICABLE SPECIAL PROVISIONS.

CONCRETE APRON ENDWALLS MAY NOT BE USED WITH GALVANIZED STEEL OR ALUMINUM CULVERT PIPE OR VISE VERSA. GALVANIZED STEEL OR ALUMINUM APRON ENDWALLS SHALL NORMALLY BE INSTALLED ON CULVERT PIPE OF THE SAME METAL.

ALL THREE PIECE STEEL APRON ENDWALLS FOR 66" X 51" PIPE ARCH AND LARGER SHALL HAVE 0.109" SIDES AND 0.138" CENTER PANELS. ALL THREE PIECE ALUMINUM APRON ENDWALLS FOR 66" X 51" PIPE ARCH AND LARGER SHALL HAVE 0.105" SIDES AND 0.134" CENTER PANELS. THE WIDTH OF CENTER PANELS SHALL BE GREATER THAN 20 PERCENT OF THE PIPE ARCH PERIMETER.

LAP SEAMS SHALL BE TIGHTLY JOINED BY GALVANIZED RIVETS OR BOLTS FOR STEEL UNITS AND ALUMINUM RIVETS AND BOLTS FOR ALUMINUM UNITS. FOR THE 77" X 52" THROUGH 112" X 75" APRON ENDWALL SIZES, THE REINFORCED EDGES AND CENTER PANEL SEAMS SHALL BE FURTHER REINFORCED WITH GALVANIZED STEEL OR ALUMINUM STIFFENER ANGLES. THE ANGLES SHALL BE ATTACHED BY GALVANIZED NUTS AND BOLTS FOR STEEL UNITS AND ALUMINUM NUTS AND BOLTS FOR ALUMINUM UNITS.

WHERE TWO OR MORE PIPES WITH APRON ENDWALLS ARE LAID ADJACENT TO EACH OTHER, THEY SHALL BE SEPARATED BY A DISTANCE SUFFICIENT TO PROVIDE A MINIMUM CLEARANCE OF 6 INCHES BETWEEN APRON ENDWALLS.

① FOR PIPE ARCH SIZES UP TO 73" X 55" A 180° ROLLED EDGE MAY BE USED INSTEAD OF STEEL ROD REINFORCEMENT. SEE SECTION A-A.

APRON ENDWALLS FOR PIPE ARCH AND ELLIPTICAL PIPE

STATE OF WISCONSIN
DEPARTMENT OF TRANSPORTATION

APPROVED
11/30/94
DATE

Doug L. Thompson
CHIEF ROADWAY DEVELOPMENT ENGINEER

FHWA

S.D.D. 8 F 2-1

S.D.D. 8 F 2-1

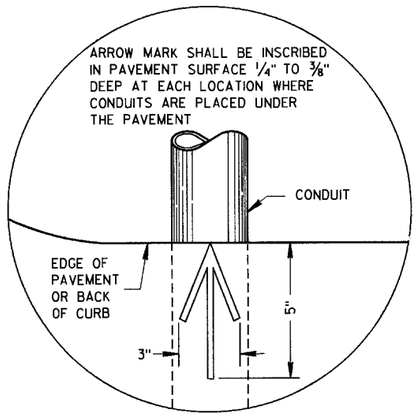

PLAN VIEW

ARROW MARK

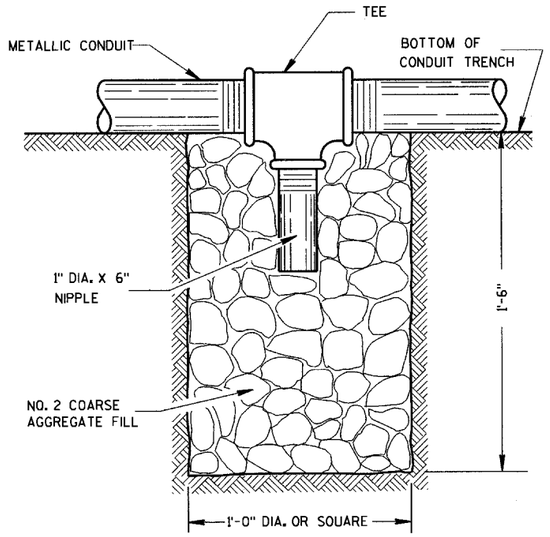

NOTE: INSTALL AT LOCATIONS WHERE METALLIC CONDUITS CANNOT BE PITCHED TO DRAIN INTO A PULL BOX.

DRAIN SUMP FOR METALLIC CONDUIT

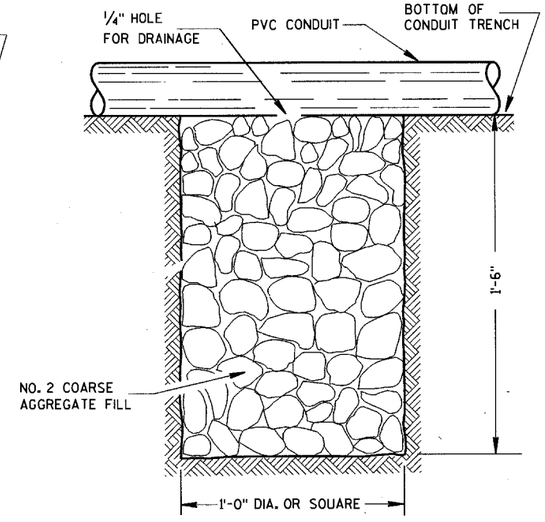

NOTE: INSTALL AT LOCATIONS WHERE PVC CONDUITS CANNOT BE PITCHED TO DRAIN INTO A PULL BOX.

DRAIN SUMP FOR PVC CONDUIT

GENERAL NOTES

DETAILS OF CONSTRUCTION, MATERIALS AND WORKMANSHIP NOT SHOWN ON THIS DRAWING SHALL CONFORM TO THE PERTINENT REQUIREMENTS OF THE CONTRACT.

METALLIC (STANDARD SPECIFICATION 652.2.2) OR NONMETALLIC (STANDARD SPECIFICATION 652.2.3) CONDUIT SHALL BE FURNISHED AND PLACED AS SHOWN.

DEPTH OF CONDUIT INSTALLED BELOW THE TRAVELED WAY SHALL BE 24 INCHES MINIMUM AND 36 INCHES MAXIMUM.

DEPTH OF CONDUIT INSTALLED THAT IS NOT BELOW THE TRAVELED WAY SHALL BE 18 INCHES MINIMUM AND 36 INCHES MAXIMUM.

ANY EXCEPTION TO THE MAXIMUM DEPTH SHALL BE ONLY WITH THE WRITTEN APPROVAL OF THE ENGINEER.

THE TRENCH SHALL NOT BE BACKFILLED PRIOR TO INSPECTION OF THE CONDUIT.

ALL METALLIC CONDUIT RACEWAY ENDS SHALL BE REAMED AND THREADED.

ALL METALLIC CONDUIT IN WHICH WIRE OR CABLE IS TO BE INSTALLED SHALL BE BUSHED WITH APPROVED THREADED BUSHINGS BEFORE INSTALLATION OF THE WIRE OR CABLE.

ALL METALLIC CONDUITS IN WHICH WIRE OR CABLE IS NOT TO BE INSTALLED SHALL BE CAPPED WITH THREADED PROTECTIVE CAPS, AS APPROVED BY THE ENGINEER.

ALL NONMETALLIC CONDUIT SHALL BE CAPPED OR PLUGGED IMMEDIATELY AFTER INSTALLATION AND SHALL REMAIN CAPPED OR PLUGGED UNTIL WIRE/CABLES ARE INSTALLED.

NONMETALLIC CONDUITS IN WHICH WIRE OR CABLE IS NOT BEING INSTALLED SHALL REMAIN CAPPED OR PLUGGED.

BENDING OF PVC ELECTRICAL CONDUIT SHALL BE ACCOMPLISHED BY USING A BLANKET OR EMERSION TYPE TANK DESIGNED FOR THE PURPOSE OF BENDING PVC ELECTRICAL CONDUIT.

ALL CUT ENDS SHALL BE TRIMMED INSIDE AND OUTSIDE TO REMOVE ALL ROUGH EDGES ON NONMETALLIC CONDUIT. (SEE NEC 347.5)

WHEN REQUIRED TO CONNECT NONMETALLIC CONDUIT TO METALLIC CONDUIT, ONLY U.L. LISTED ADAPTER FITTINGS SHALL BE USED.

PRIOR TO CONDUIT ACCEPTANCE, CONDUIT CAPS OR PLUGS SHALL BE REMOVED, AND THE CAPS, PLUGS AND CONDUIT ENDS SHALL BE THOROUGHLY CLEANED AND THEN THE CAPS OR PLUGS REINSTALLED TO ENSURE THAT THE CAPS OR PLUGS CAN BE EASILY REMOVED IN THE FUTURE.

ALL CONDUIT BEING FURNISHED AND INSTALLED SHALL HAVE THE U.L. LABEL FIRMLY ATTACHED.

CONDUIT RUNS SHALL BE THE SAME SIZE OF CONDUIT FROM ONE END TO THE OTHER (FROM PULL BOX TO PULL BOX-OR-JUNCTION BOX TO JUNCTION BOX-OR-BASE TO BASE, ETC.).

POLY ROPE OR A PULL WIRE SHALL BE INSTALLED AS STATED IN THE STANDARD SPECIFICATION, ITEM 652.3.1.1.

ALL CONDUIT RUNS SHALL BE STRAIGHT (WITHOUT BENDS) FROM PULL BOX TO PULL BOX, PULL BOX TO BASE AND BASE TO BASE AS SHOWN ON THE PLANS UNLESS OTHERWISE APPROVED BY THE PROJECT ENGINEER.

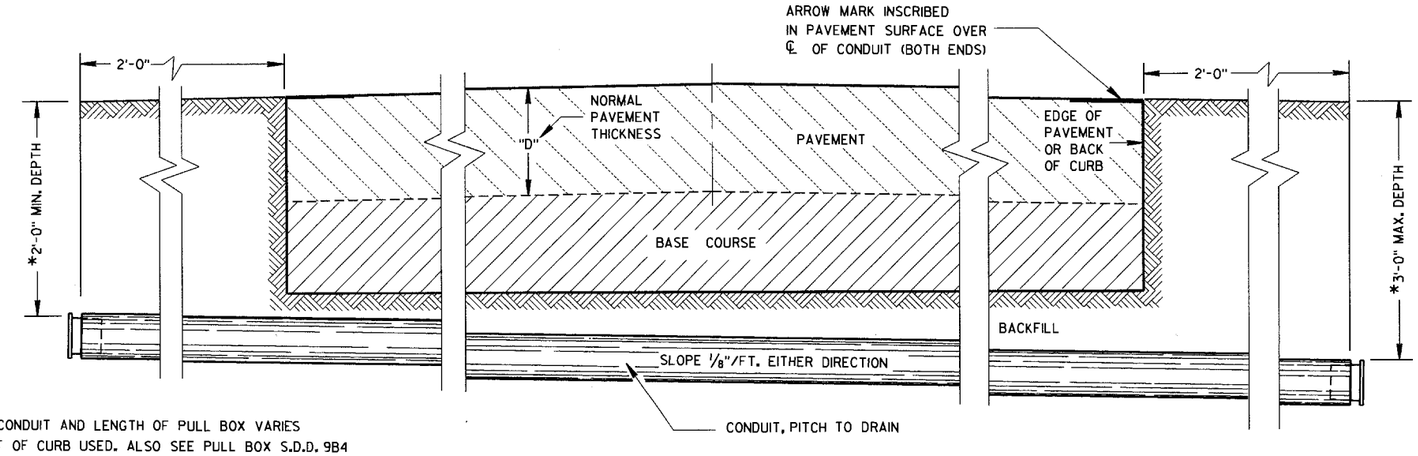

*DEPTH OF CONDUIT AND LENGTH OF PULL BOX VARIES WITH HEIGHT OF CURB USED. ALSO SEE PULL BOX S.D.D. 9B4

SIDE ELEVATION

DETAIL FOR CONDUIT UNDER PAVED HIGHWAYS

CONDUIT

STATE OF WISCONSIN
DEPARTMENT OF TRANSPORTATION

APPROVED 10/21/96 DATE
FHWA

STATE ELECTRICAL ENGINEER FOR HIGHWAYS

S.D.D. 9 B 2-6

S.D.D. 9 B 2-6

TABLE OF NOMINAL DIMENSIONS AND WEIGHTS

DIMENSION IN INCHES		TYPE OF PIPE									
		CORRUGATED STEEL									POLYETHYLENE SDR 32.5
PIPE DIAMETER (INSIDE)	A	12	12	12	18	18	18	24	24	24	12
PIPE LENGTH **	B	24	30	36	24	30	36	36	42	48	24
WALL THICKNESS	C	0.064	0.064	0.064	0.064	0.064	0.064	0.064	0.064	0.064	0.4
COVER	D	10 1/4	10 1/4	10 1/4	16 1/4	16 1/4	16 1/4	22 1/4	22 1/4	22 1/4	10 1/4
FRAME	E	14 1/2	14 1/2	14 1/2	20 1/2	20 1/2	20 1/2	26 1/2	26 1/2	26 1/2	14 1/2
FRAME	F	8 1/2	8 1/2	8 1/2	14 1/2	14 1/2	14 1/2	20 1/2	20 1/2	20 1/2	8 1/2
FRAME	G	11 1/2	11 1/2	11 1/2	17 1/2	17 1/2	17 1/2	23 1/2	23 1/2	23 1/2	11 1/2
WEIGHT IN POUNDS *											
FRAME AND COVER		60	60	60	110	110	110	155	155	155	60

* THE ACTUAL WEIGHT OF THE MANHOLE FRAME AND COVER MAY VARY WITHIN 5 PERCENT PLUS OR MINUS OF THE WEIGHTS SHOWN.

** NORMALLY USED LENGTHS. THE PROJECT ENGINEER SHALL DETERMINE IF PIPE LENGTHS, OTHER THAN THOSE SPECIFIED, SHALL BE USED, TO A MAXIMUM OF 48" (CONTINUOUS LENGTH, NON-SPLICED). THE ADDITIONAL LENGTH SHALL BE INCIDENTAL TO THE PULL BOX BID PRICE.

GENERAL NOTES

DETAILS OF CONSTRUCTION, MATERIALS AND WORKMANSHIP NOT SHOWN ON THIS DRAWING SHALL CONFORM TO THE PERTINENT REQUIREMENTS OF THE CONTRACT.

ALL FRAMES AND COVERS SHALL BE HEAVY DUTY TYPE, SUITABLE FOR VEHICULAR TRAFFIC LOADS.

PULL BOXES LOCATED IN THE ROADWAYS SHALL HAVE LOCKING COVERS.

ENTRANCE HOLES INTO PULL BOXES SHALL BE CUT WITH A CIRCULAR HOLE SAW OR HYDRAULIC CONDUIT PUNCH. HOLE SIZE SHALL BE THE OUTSIDE DIAMETER OF THE CONDUIT THAT IS TO FIT IN THE OPENING PLUS NO MORE THAN 1/4".

THE CONTRACTOR SHALL NOT INSTALL WIRE IN ANY PULL BOX UNTIL ITS INSTALLATION HAS BEEN INSPECTED AND ACCEPTED BY THE ENGINEER.

GROUNDING LUGS (MECHANICAL CONNECTORS) SHALL BE U.L. LISTED AND APPROVED FOR USE WITH COPPER WIRE. THE MECHANICAL CONNECTION (INSIDE AND OUTSIDE) TO THE PULL BOX, SHALL BE TOTALLY AND PERMANENTLY SEALED WITH A SILICONE OR RUBBERIZED CAULKING COMPOUND AS APPROVED BY THE ENGINEER.

GROUNDING LUGS ARE NOT REQUIRED IN PULL BOXES WHEN VOLTAGES OF LESS THAN 50 VOLTS AC ARE THE ONLY VOLTAGES ENCOUNTERED IN THE BOXES.

DRAIN DUCT SHALL BE MEASURED AND PAID FOR SEPARATELY.

RODENT WIRE SCREEN SHALL BE 1/8" STAINLESS STEEL MESH AND BE INSTALLED WITH A STAINLESS STEEL HOSE CLAMP OF SUFFICIENT SIZE.

ALL METALLIC CONDUIT IN WHICH WIRE AND/OR CABLE IS TO BE INSTALLED, SHALL BE BUSHED BEFORE INSTALLATION OF THE WIRE AND/OR CABLE.

S.D.D. 9B2, "CONDUIT", APPLIES TO THIS DRAWING.

WHEN PULL BOXES ARE INSTALLED FOR FUTURE USE, DO NOT INSTALL THE EQUIPMENT GROUNDING LUG. THE EQUIPMENT GROUNDING LUG, THE EQUIPMENT GROUNDING ELECTRODE AND THE EQUIPMENT GROUNDING CONDUCTOR SHALL BE REQUIRED AND INSTALLED UNDER A FUTURE WIRING CONTRACT.

IF PULL BOX EQUIPMENT GROUNDING IS REQUIRED USING AN EQUIPMENT GROUNDING ELECTRODE IN EACH PULL BOX, THE EQUIPMENT GROUNDING ELECTRODE SHALL BE 5/8" X 8'-0", COPPERCLAD AND BE EXOTHERMICALLY WELDED TO A #4 AWG, COPPER, STRANDED WIRE (BARE OR GREEN INSULATED). THE #4 AWG WIRE SHALL BE 4 FEET IN LENGTH, NEATLY COILED, TAPED AND AVAILABLE FOR USE WHEN REQUIRED.

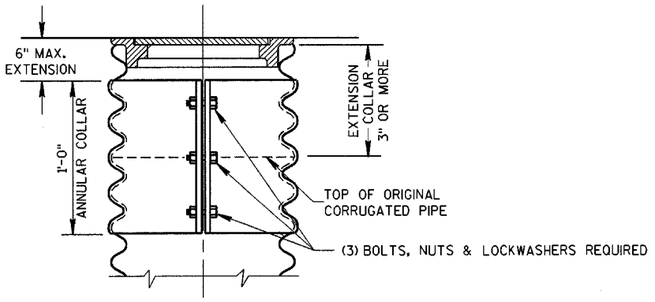

CORRUGATED PIPE EXTENDER

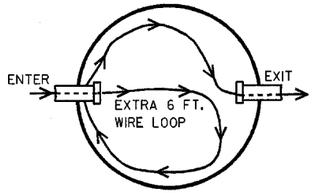

ILLUSTRATION OF WIRE/CABLE PLACEMENT IN PULLBOX

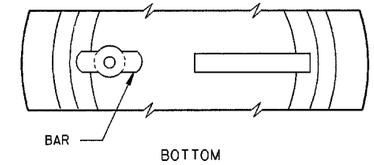

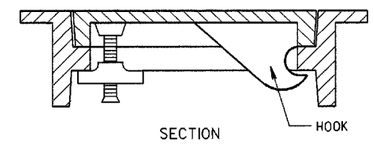

ALTERNATE COVER (LOCKING)

TIGHTENING BAR TYPE

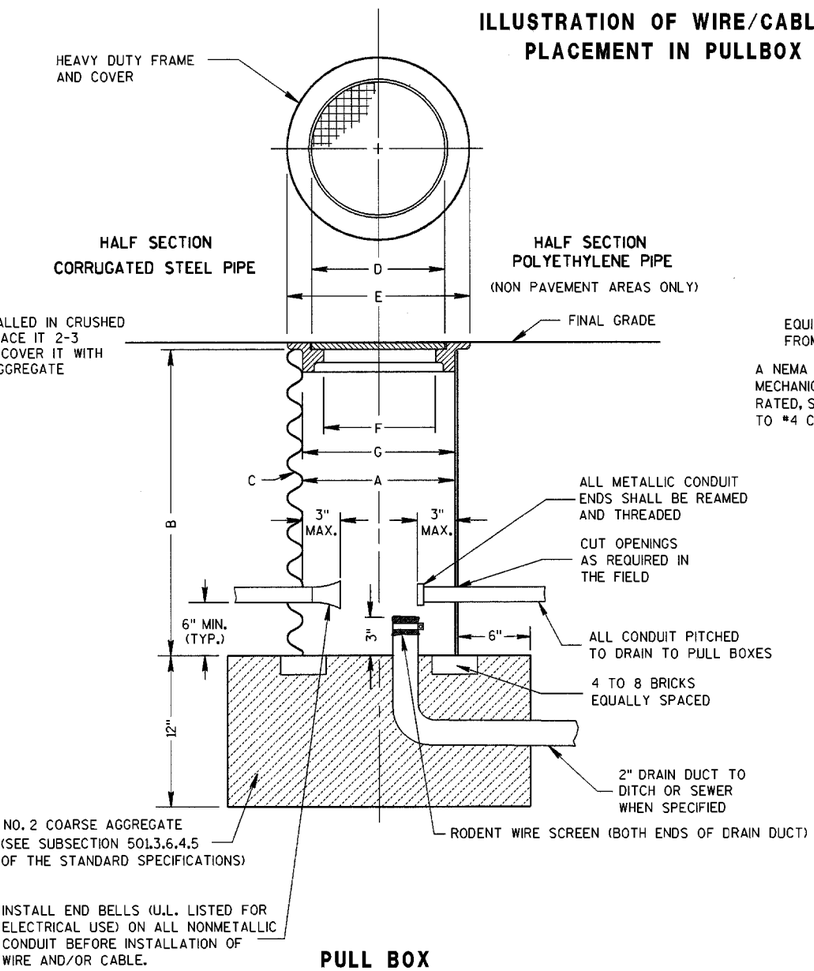

PULL BOX

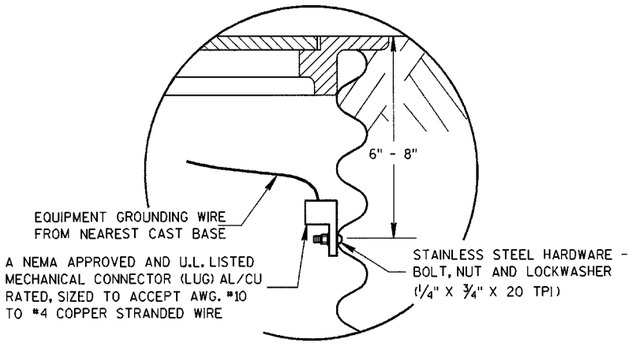

EQUIPMENT GROUNDING LUG AND LOCATION IN STEEL PULL BOXES

PULL BOX

STATE OF WISCONSIN
DEPARTMENT OF TRANSPORTATION

APPROVED 2/11/02
DATE

STATE ELECTRICAL ENGINEER FOR HIGHWAYS

FHWA

S.D.D. 9 B 4-5

S.D.D. 9 B 4-5

FORM DEPTH SHALL BE NO MORE THAN 6" BELOW GRADE ON THE LOWER SIDE OF BASE

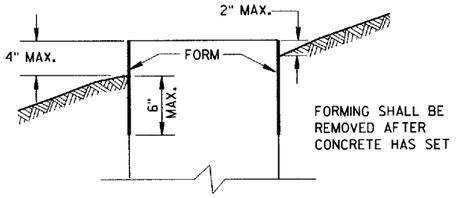

FORMING DETAIL

QUANTITY REQUIREMENTS	CONCRETE BASE TYPE		
	1	2	5
APPROX. CUBIC YARDS OF CONCRETE	0.40	0.57	0.40
LBS. OF HOOP BAR STEEL	NONE	23	16
LBS. OF VERTICAL BAR STEEL	NONE	60	18

GENERAL NOTES

DETAILS OF CONSTRUCTION, MATERIALS AND WORKMANSHIP NOT SHOWN ON THIS DRAWING SHALL CONFORM TO THE PERTINENT REQUIREMENTS OF THE CONTRACT.

BASES SHALL BE EXCAVATED BY USE OF A CIRCULAR AUGER.

TOP SURFACES OF CONCRETE BASES SHALL BE TROWEL FINISHED AND LEVEL.

CONDUIT SIZES AND LOCATIONS SHALL BE AS SHOWN ON THE PLANS.

THE FINAL OR TERMINATING CONCRETE BASE IN A CONDUIT RUN SHALL HAVE A 6" EXIT STUB INSTALLED FOR FUTURE CABLING USE. THE EXIT STUB SHALL BE SIZED AS USED THROUGHOUT THE CONDUIT RUN AS SHOWN AT THE ENTRANCE OF THE BASE.

MINIMUM BENDING RADIUS OF CONDUIT IS EQUAL TO 6 X THE DIAMETER.

CONDUIT HEIGHT ABOVE CONCRETE BASES SHALL BE 1 INCH. ALL METALLIC CONDUIT ENDS SHALL BE REAMED AND THREADED.

ALL CONDUIT ENDS AT THE TOP OF CONCRETE BASES SHALL BE CAPPED IF METALLIC OR PLUGGED IF NONMETALLIC IMMEDIATELY AFTER PLACEMENT AND BEFORE CONCRETE IS POURED. CONDUITS IN WHICH WIRE OR CABLE IS NOT INSTALLED SHALL REMAIN CAPPED OR PLUGGED.

GENERAL NOTES (CONTINUED)

BELL ENDS SHALL BE INSTALLED ON ALL PVC CONDUIT EXPOSED AT THE TOP OF CONCRETE BASES BEFORE INSTALLATION OF CABLE OR WIRE.

ENDS OF CONDUIT INSTALLED BELOW GRADE FOR FUTURE USE SHALL BE CAPPED IF METALLIC OR PLUGGED IF NONMETALLIC.

WHEN REQUIRED TO CONNECT NONMETALLIC CONDUIT TO METALLIC CONDUIT, ONLY ADAPTER FITTINGS, U.L. LISTED FOR ELECTRICAL USE, SHALL BE USED.

IF A BASE REQUIRES A DEEP FORM BECAUSE OF LOOSE DIRT OR FILL, THE FORM SHALL BE REMOVED BEFORE BACKFILLING AROUND THE BASE. BACKFILL SHALL BE TAMPED TIGHT AGAINST THE BARE CONCRETE BASE IN LAYERS OF 1 FOOT OR LESS.

A NO. 4 AWG, STRANDED COPPER EQUIPMENT GROUNDING CONDUCTOR SHALL BE EXOTHERMICALLY WELDED TO THE EQUIPMENT GROUNDING ELECTRODE (GROUND ROD) FOR TYPE 2 AND TYPE 5 BASES.

THE EQUIPMENT GROUNDING CONDUCTOR SHALL BE FURNISHED AND INSTALLED TO ENTER THE BASE OF THE TYPE 2 AND TYPE 5 BASES THROUGH A 1 INCH CONDUIT INSTALLED FOR GROUNDING PURPOSES, LEAVING A 4 FOOT COIL OF WIRE ABOVE THE CONCRETE BASE. THE EQUIPMENT GROUNDING CONDUCTOR SHALL BE NEATLY COILED AND THE COILS TIED TOGETHER.

ANCHOR RODS SHALL BE THREADED 12" IN LENGTH ON EACH END OF THE ROD. ANCHOR RODS SHALL BE MANUFACTURED IN ACCORDANCE WITH SECTION 654.2.1 AND 641.2.2 OF THE STANDARD SPECIFICATIONS. ASTM A-449, OR ASTM A-687 (GRADE 105).

WASHERS AND LOCK WASHERS ARE REQUIRED ON ALL ANCHOR RODS.

WHEN ANCHOR RODS USING THE ALTERNATE "L" BEND ARE FURNISHED, THE 4" "L" BEND SHALL BE IN ADDITION TO THE SPECIFIED ANCHOR ROD BAR LENGTH. THE "L" BEND END SHALL NOT BE THREADED.

WELDING OF THE ANCHOR RODS TO THE CAGE IS UNACCEPTABLE. TIE WIRES SHALL BE USED.

BAR STEEL REINFORCEMENT SHALL BE COATED WITH POWERED EPOXY RESIN IN ACCORDANCE WITH SECTION 505 OF THE STANDARD SPECIFICATIONS (LATEST EDITION).

(1) THE MINIMUM DEPTH OF CONDUIT EXITING THE CONCRETE BASE AND INSTALLED BELOW THE TRAVELED WAY SHALL BE 24 INCHES. THE MINIMUM DEPTH OF CONDUIT EXITING THE CONCRETE BASE THAT IS NOT INSTALLED BELOW THE TRAVELED WAY SHALL BE 18 INCHES. THE MAXIMUM DEPTH OF ALL CONDUIT SHALL BE 36 INCHES EXCEPT WITH WRITTEN APPROVAL BY THE ENGINEER.

(2) (4) 1" DIA. X 3'-6" ANCHOR RODS.

(3) (4) 1" DIA. X 5'-0" ANCHOR RODS.

(4) (6) NO. 6 X 6'-8" BAR STEEL REINFORCEMENT.

(5) (7) NO. 4 X 5'-1" BAR STEEL REINFORCEMENT @ 1'-0" C-C.

(6) (4) 1" DIA. X 3'-6" ANCHOR RODS.

(7) (6) NO.4 X 4'-8" BAR STEEL REINFORCEMENT

(8) (5) NO. 4 X 5'-1" BAR STEEL REINFORCEMENT @ 1'-0" C-C.

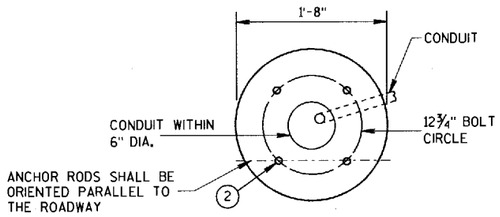

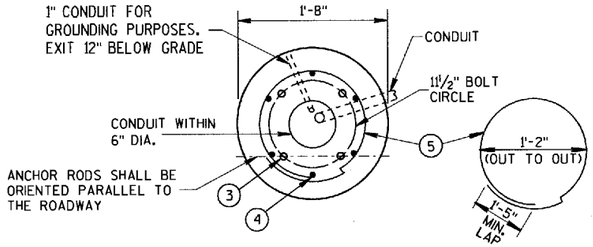

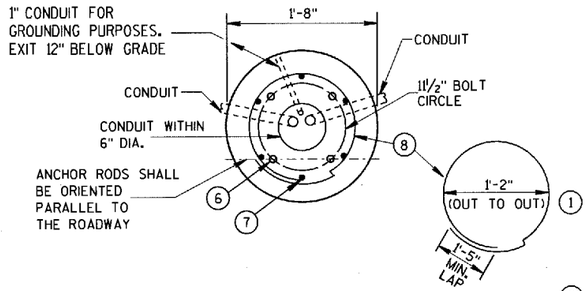

FORM ALL EXPOSED CONCRETE. PROVIDE 1" CHAMFER ALL AROUND

HALF SECTION IN UNPAVED AREA (TYPICAL FOR TYPES 1, 2 & 5)

HALF SECTION IN PAVEMENT (TYPICAL FOR TYPES 1, 2 & 5)

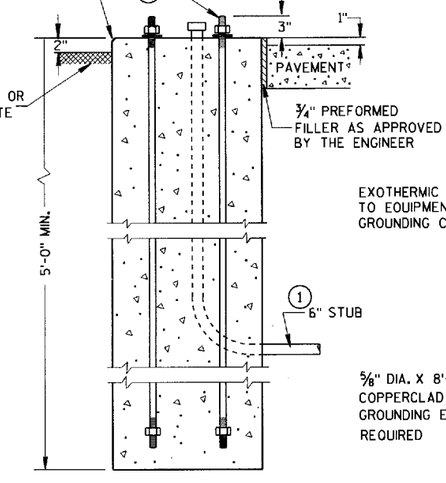

TYPE 1

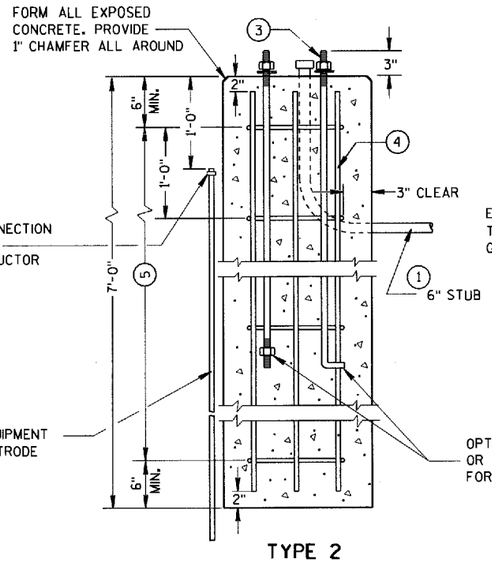

TYPE 2

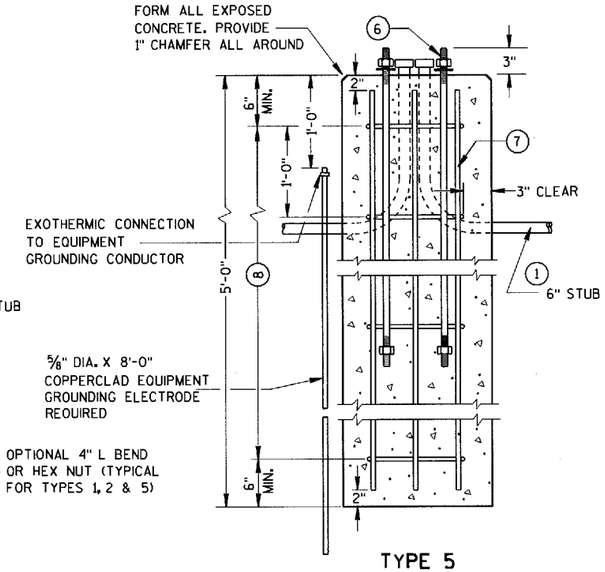

TYPE 5

CONCRETE BASES

CONCRETE BASES, TYPES 1, 2 & 5

STATE OF WISCONSIN
DEPARTMENT OF TRANSPORTATION

APPROVED 10/21/96 DATE
FHWA

STATE ELECTRICAL ENGINEER FOR HIGHWAYS

S.D.D. 9 C 2-2

S.D.D. 9 C 2-2

GENERAL NOTES

DETAILS OF CONSTRUCTION, MATERIALS AND WORKMANSHIP NOT SHOWN ON THIS DRAWING SHALL CONFORM TO THE PERTINENT REQUIREMENTS OF THE CONTRACT.

FOUR (4) BOLTS SHALL BE FURNISHED WITH EACH TRANSFORMER BASE. BOLTS SHALL BE 1" DIAMETER, 4" IN LENGTH, WITH WASHERS, LOCK WASHERS AND NUTS. BOLTS, NUTS AND WASHERS SHALL BE MANUFACTURED IN ACCORDANCE WITH SECTION 641.2.2 OF THE STANDARD SPECIFICATIONS, ASTM A-325, (92,000 YIELD) HEAVY HEX NUT AND BE GALVANIZED IN ACCORDANCE WITH ASTM A-153, CLASS C.

LEVELING SHIMS, IF NEEDED, SHALL BE DESIGNED FOR THE PURPOSE AND USED UNDER CAST BASES WHEN PLUMBING POLES OR STANDARDS DURING INSTALLATION. THE USE OF WASHERS IN LIEU OF PROPER LEVELING SHIMS IS NOT ACCEPTABLE.

SHIM LENGTH SHALL BE LONG ENOUGH TO COMPLETELY COVER THE AREA UNDER THE LENGTH AND WIDTH OF THE BASE MOUNTING FLANGE.

DOUBLE NUTTING IS NOT ACCEPTABLE FOR LEVELING OR MOUNTING PURPOSES.

A NEMA APPROVED AND U.L. LISTED MECHANICAL CONNECTOR (LUG) AL/CU RATED AND SIZED TO ACCEPT #10 AWG STRANDED WIRE, SHALL BE FURNISHED AND INSTALLED IN THE PEDESTAL AND TRANSFORMER BASES.

THE MECHANICAL CONNECTOR SHALL BE INSTALLED USING A 1/4" - 20 (TPI) STAINLESS STEEL HEX HEAD BOLT OF SUFFICIENT LENGTH TO FIRMLY ATTACH THE LUG TO THE BASE.

SHOULD THE MANNER OF ATTACHMENT OF THE LUG REQUIRE WASHERS, HEX NUTS, LOCK WASHER - THEY SHALL BE STAINLESS STEEL AS IS THE BOLT. THE MANNER OF ATTACHMENT SHALL NOT BLOCK ACCESSIBILITY TO WIRE PLACEMENT IN THE CONNECTOR.

PEDESTAL BASE COLLAR THREADING SHALL BE TAPERED AND IN ACCORDANCE WITH NATIONAL PIPE THREADING DIMENSIONS.

BASE COLLAR THREADING SHALL EXTEND INTO THE BASE COLLAR WITH SUFFICIENT DEPTH TO ACCEPT THE INSTALLATION OF TRAFFIC SIGNAL STANDARDS TO A DEPTH OF 1 1/2", THEN TIGHTENING TO A POINT OF BEING IMMOVABLE.

THE ACCESS DOOR SHALL BE OF THE SAME MATERIAL AS THE BASE.

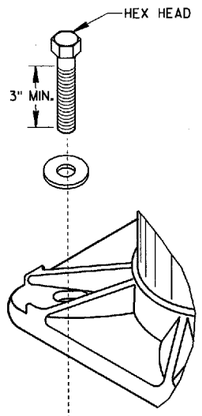

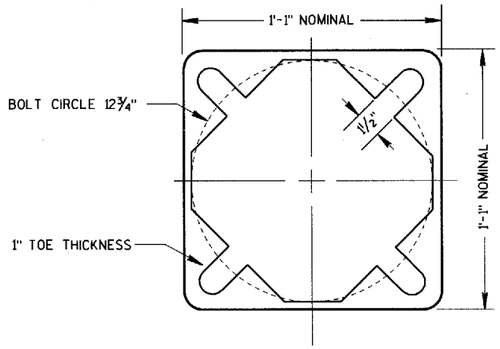

BOTTOM VIEW (PEDESTAL BASE)

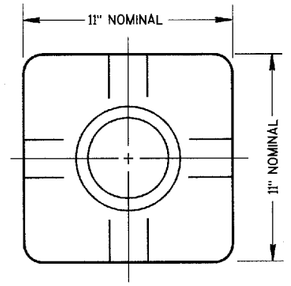

TOP VIEW (PEDESTAL BASE)

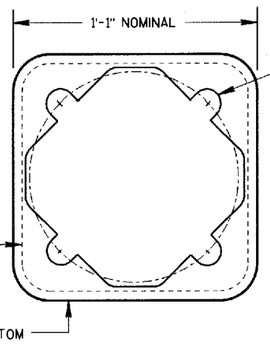

BOTTOM VIEW (TRANSFORMER BASE)

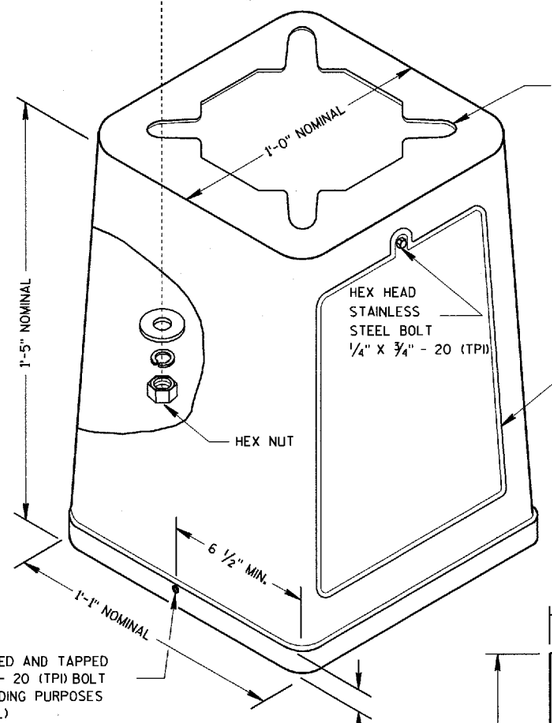

ISOMETRIC VIEW

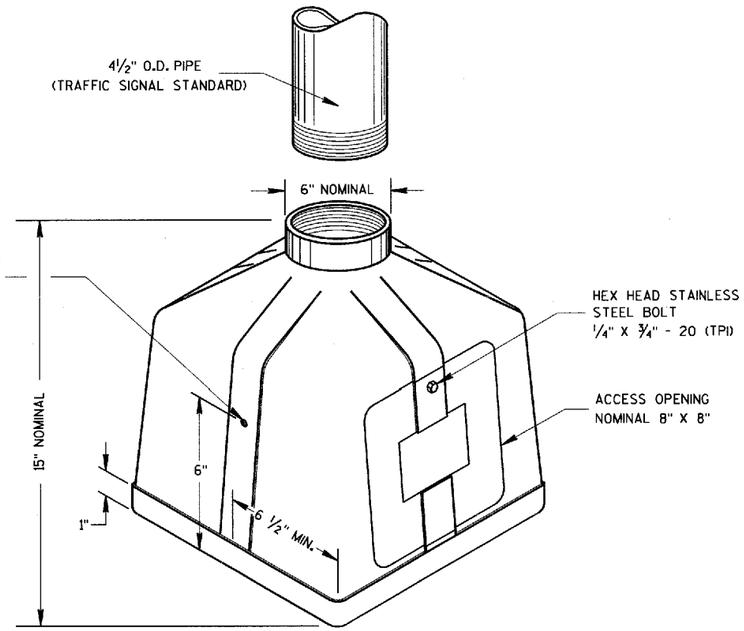

ISOMETRIC VIEW

PEDESTAL BASE

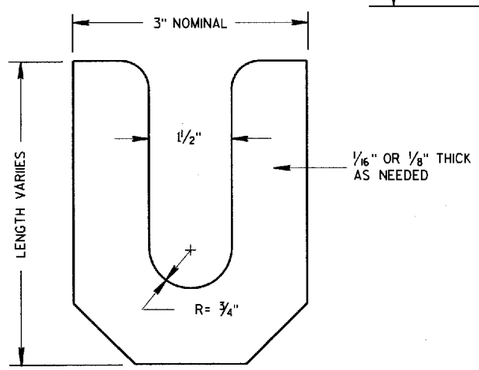

LEVELING SHIM

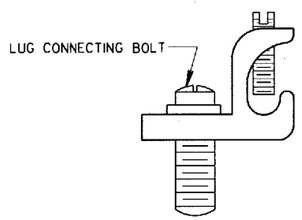

TYPICAL MECHANICAL CONNECTOR LUG

TO BE FURNISHED WITH EACH BASE

TRANSFORMER BASE

INTENDED FOR USE WITH TYPE 2, 3, 4, 5 & 6 POLES

TRANSFORMER/PEDESTAL BASES

STATE OF WISCONSIN
DEPARTMENT OF TRANSPORTATION

APPROVED 10/21/96 (DATE)
STATE ELECTRICAL ENGINEER FOR HIGHWAYS

FHWA

S.D.D. 9 C 3-2

CONTROL CABINET BASE TYPE	DIMENSIONS				C.Y. CONCRETE (APPROX.)
	H	I	J	K	
TYPE 6 - 30" CABINET	34"	60"	10"	17"	.64
TYPE 7 - 38" CABINET	42"	60"	10"	21"	.93
TYPE 8 - 38" CABINET	42"	72"	12"	21"	1.29
TYPE 9 - VARIABLE	54"	72"	14"	27"	1.56
TYPE 10 - POST MOUNT	AS SHOWN				.32

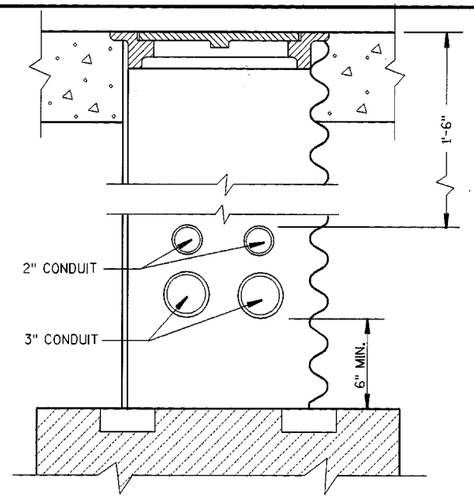

CONDUIT LOCATIONS IN 24" X 36" PULL BOX
(LEADING TO CONTROLLER CABINET BASE TYPE 6, 7, 8 AND 9)

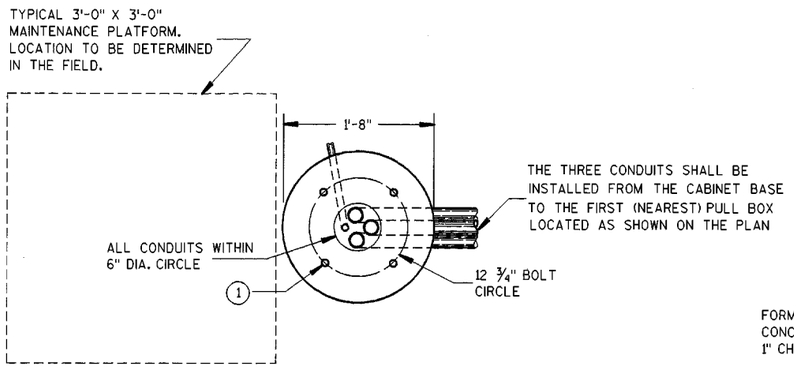

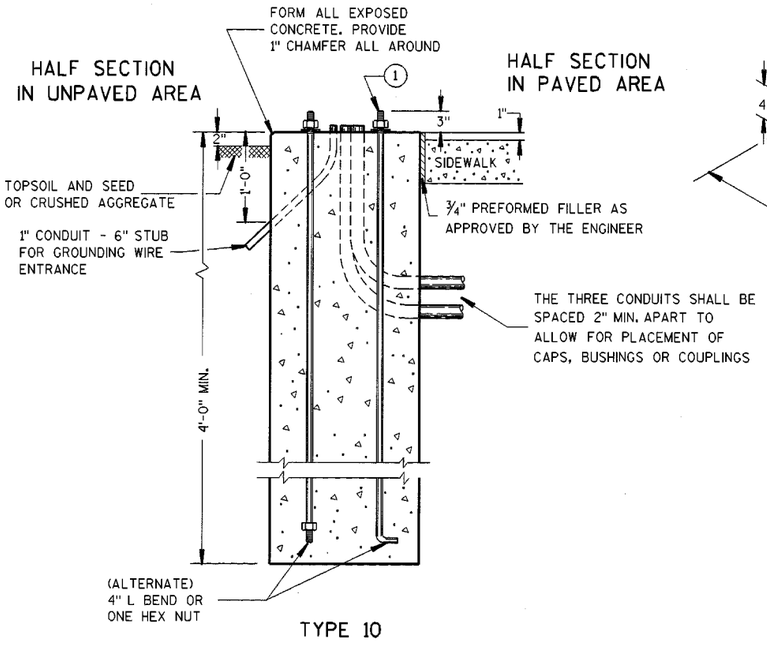

TYPE 10

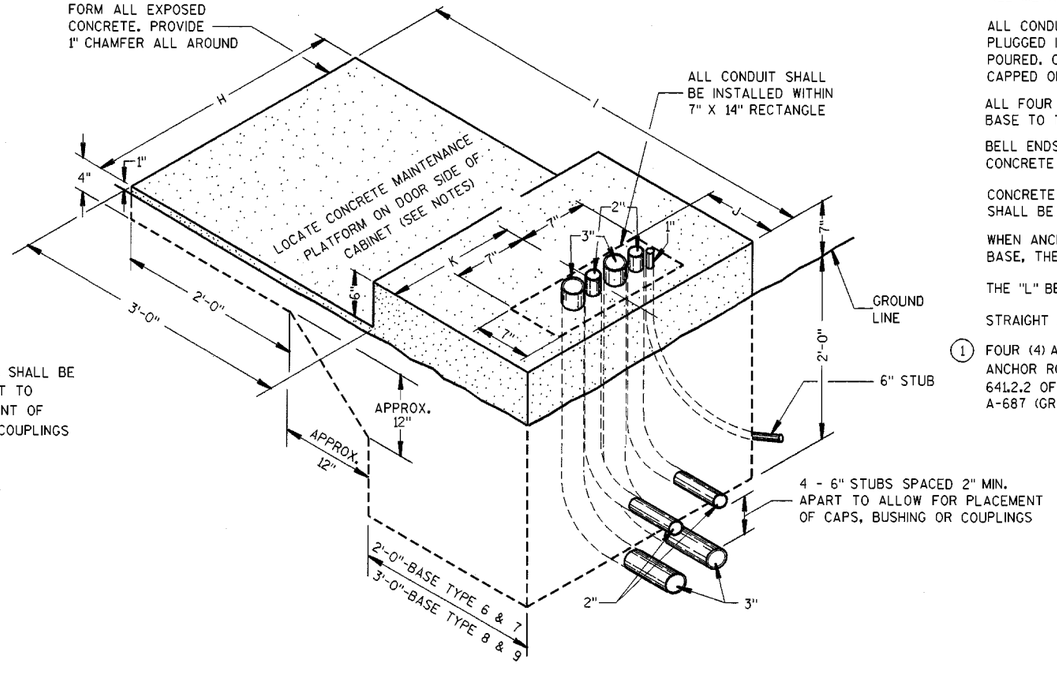

TYPE 6,7,8 AND 9
(ISOMETRIC VIEW)

GENERAL NOTES

DETAILS OF CONSTRUCTION, MATERIALS AND WORKMANSHIP NOT SHOWN ON THIS DRAWING SHALL CONFORM TO THE PERTINENT REQUIREMENTS OF THE CONTRACT.

INSTALL FOUR ½ INCH MINIMUM DIAMETER X 4 INCH MINIMUM LENGTH APPROVED CONCRETE MASONRY ANCHORS TO ANCHOR THE CABINET TO TYPE 6, 7, 8, AND 9 BASES. THE ANCHOR STUDS SHALL BE LOCATED AS DIRECTED BY THE ENGINEER TO PROPERLY ANCHOR THE CONTROL CABINET TO THE BASE.

WHEN REQUIRED TO CONNECT NONMETALLIC CONDUIT TO METALLIC CONDUIT, ONLY ADAPTER FITTINGS, U.L. LISTED FOR ELECTRICAL USE, SHALL BE USED.

CONDUIT HEIGHT ABOVE THE CONCRETE BASE SHALL BE 1 INCH.

DEPTH OF CONDUIT INSTALLED BELOW THE TRAVELED WAY SHALL BE 24 INCHES MINIMUM AND 36 INCHES MAXIMUM.

DEPTH OF CONDUIT INSTALLED THAT IS NOT BELOW THE TRAVELED WAY SHALL BE 18 INCHES MINIMUM AND 36 INCHES MAXIMUM.

ANY EXCEPTION TO THE MAXIMUM DEPTH SHALL BE ONLY WITH THE WRITTEN APPROVAL OF THE ENGINEER.

CONTROL CABINET BASE TOP SURFACES SHALL BE TROWEL FINISHED AND LEVEL.

WHEN A TYPE 10 CONTROL CABINET BASE IS USED TO POST MOUNT A CONTROL CABINET, A 36" SQUARE 4" THICK CONCRETE MAINTENANCE PLATFORM SHALL BE REQUIRED ON THE DOOR SIDE OF THE CABINET. THE TOP 1 INCH SHALL BE ABOVE FINISHED GRADE AND BE BROOM FINISHED AND LEVEL.

MAINTENANCE PLATFORMS ARE NOT REQUIRED WHEN THE SURROUNDING AREA IS PAVED.

MINIMUM BENDING RADIUS OF CONDUIT = 6 X THE DIAMETER.

ALL METALLIC CONDUIT ENDS SHALL BE REAMED AND THREADED.

ALL CONDUIT ENDS AT THE TOP OF CONCRETE BASES SHALL BE CAPPED IF METALLIC OR PLUGGED IF NONMETALLIC IMMEDIATELY AFTER PLACEMENT AND BEFORE CONCRETE IS POURED. CONDUITS IN WHICH WIRE OR CABLE IS NOT BEING INSTALLED SHALL REMAIN CAPPED OR PLUGGED.

ALL FOUR (TWO INCH AND THREE INCH) CONDUIT SHALL BE INSTALLED FROM THE CABINET BASE TO THE FIRST (NEAREST PULL BOX LOCATED AS SHOWN ON THE PLANS.

BELL ENDS SHALL BE INSTALLED ON ALL PVC CONDUIT EXPOSED AT THE TOP OF THE CONCRETE BASE BEFORE INSTALLATION OF CABLE OR WIRE.

CONCRETE FORM DEPTH BELOW FINISHED GRADE SHALL BE 6" MAXIMUM. CONCRETE FORMS SHALL BE REMOVED AFTER CONCRETE HAS SET.

WHEN ANCHOR RODS USING THE ALTERNATE L BEND ARE FURNISHED FOR THE TYPE 10 BASE, THE 4" L BEND SHALL BE IN ADDITION TO THE SPECIFIED ANCHOR ROD BAR LENGTH.

THE "L" BEND SHALL NOT BE THREADED.

STRAIGHT ANCHOR RODS SHALL BE THREADED 12" IN LENGTH ON EACH END OF THE ROD.

(1) FOUR (4) ANCHOR RODS, 1" DIA. X 3'-6"
ANCHOR RODS SHALL BE MANUFACTURED IN ACCORDANCE WITH SECTION 654.2.1 AND 641.2.2 OF THE STANDARD SPECIFICATIONS AND IN ACCORDANCE WITH A-449, OR ASTM. A-687 (GRADE 105).

6

CONCRETE CONTROL CABINET BASES

STATE OF WISCONSIN
DEPARTMENT OF TRANSPORTATION

APPROVED
3/24/03
DATE
STATE ELECTRICAL ENGINEER FOR HIGHWAYS
FHWA

S.D.D. 9 C 5-3

S.D.D. 9 C 5-3

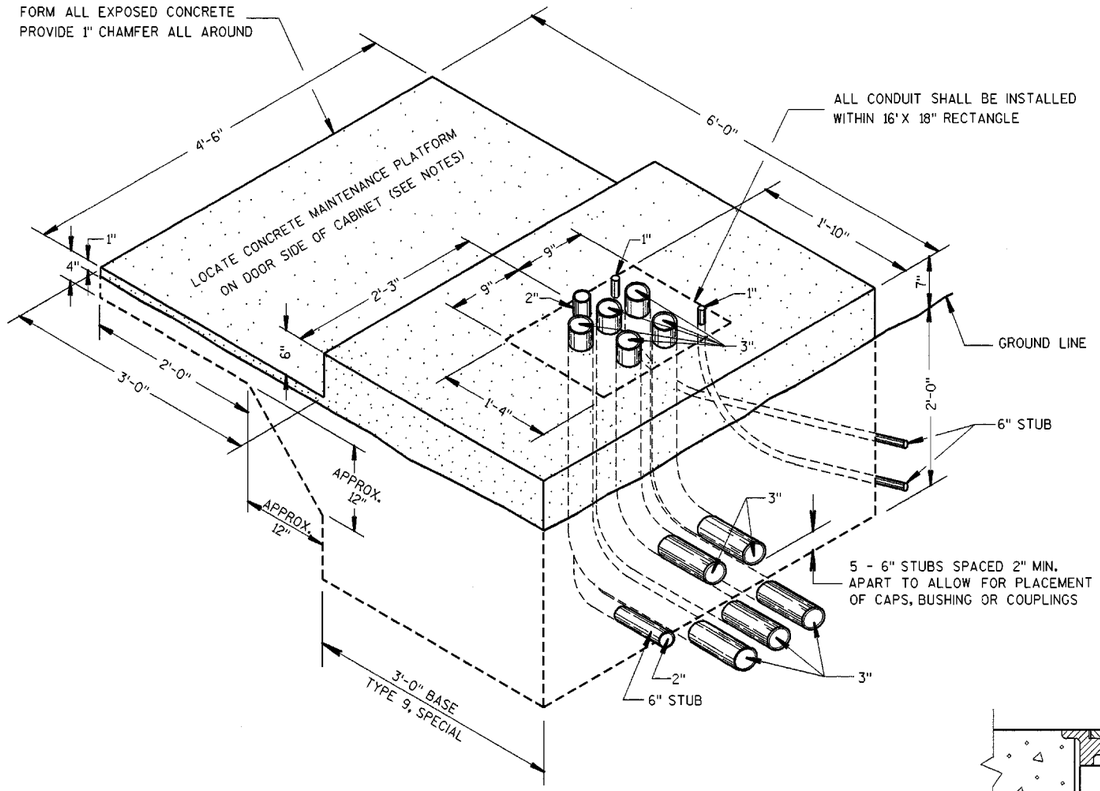

ISOMETRIC VIEW

TYPE 9, SPECIAL (5-3")

(C.Y. CONCRETE = APPROX. 1.56)

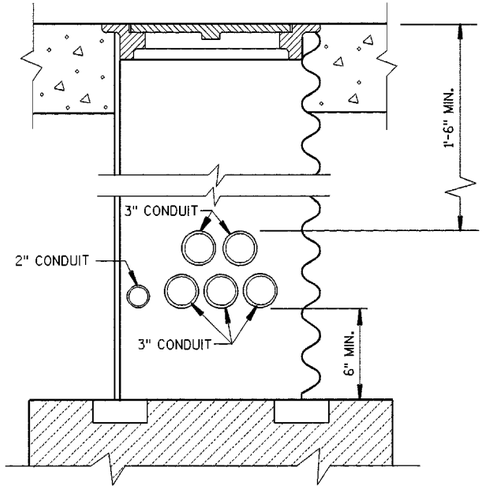

CONDUIT LOCATIONS IN 24" X 36" PULL BOX

(LEADING TO CONTROLLER CABINET BASE TYPE 9, SPECIAL)

FOR OTHER PULL BOX INFORMATION, SEE SDD FOR "PULL BOXES"

GENERAL NOTES

DETAILS OF CONSTRUCTION, MATERIALS AND WORKMANSHIP NOT SHOWN ON THIS DRAWING SHALL CONFORM TO THE PERTINENT REQUIREMENTS OF THE CONTRACT.

INSTALL FOUR ½ INCH MINIMUM DIAMETER X 4 INCH MINIMUM LENGTH APPROVED CONCRETE MASONRY ANCHORS TO ANCHOR THE CABINET TO TYPE 6, 7, 8, AND 9 BASES. THE ANCHOR STUDS SHALL BE LOCATED AS DIRECTED BY THE ENGINEER TO PROPERLY ANCHOR THE CONTROL CABINET TO THE BASE.

WHEN REQUIRED TO CONNECT NONMETALLIC CONDUIT TO METALLIC CONDUIT, ONLY ADAPTER FITTINGS, U.L. LISTED FOR ELECTRICAL USE, SHALL BE USED.

CONDUIT HEIGHT ABOVE THE CONCRETE BASE SHALL BE 1 INCH.

DEPTH OF CONDUIT INSTALLED BELOW THE TRAVELED WAY SHALL BE 24 INCHES MINIMUM AND 36 INCHES MAXIMUM.

DEPTH OF CONDUIT INSTALLED THAT IS NOT BELOW THE TRAVELED WAY SHALL BE 18 INCHES MINIMUM AND 36 INCHES MAXIMUM.

ANY EXCEPTION TO THE MAXIMUM DEPTH SHALL BE ONLY WITH THE WRITTEN APPROVAL OF THE ENGINEER.

CONTROL CABINET BASE TOP SURFACE SHALL BE TROWEL FINISHED AND LEVEL.

MAINTENANCE PLATFORM SHALL BE FLOAT OR BROOM FINISHED AND BE LEVEL.

MAINTENANCE PLATFORMS ARE NOT REQUIRED WHEN THE SURROUNDING AREA IS PAVED.

MINIMUM BENDING RADIUS OF CONDUIT = 6 X THE DIAMETER.

ALL METALLIC CONDUIT ENDS SHALL BE REAMED AND THREADED.

CAP ALL BELOW GRADE METALLIC CONDUIT ENDS IN WHICH WIRE OR CABLE IS NOT BEING INSTALLED.

PLUG ALL BELOW GRADE NONMETALLIC CONDUIT ENDS IN WHICH WIRE OR CABLE IS NOT BEING INSTALLED.

ALL CONDUIT ENDS AT THE TOP OF CONCRETE BASES SHALL BE CAPPED IF METALLIC OR PLUGGED IF NONMETALLIC IMMEDIATELY AFTER PLACEMENT AND BEFORE CONCRETE IS POURED. CONDUITS IN WHICH WIRE OR CABLE IS NOT BEING INSTALLED SHALL REMAIN CAPPED OR PLUGGED.

CONDUIT EXITING THE CONCRETE BASE (ONE TWO INCH, FIVE THREE INCH) SHALL TERMINATE IN PULL BOX(S) AS SHOWN ON THE PLANS.

CONCRETE FORM DEPTH BELOW FINISHED GRADE SHALL BE 6" MAXIMUM. CONCRETE FORMS SHALL BE REMOVED AFTER CONCRETE HAS SET.

BELL ENDS SHALL BE INSTALLED ON ALL PVC CONDUIT EXPOSED AT THE TOP OF THE CONCRETE BASE BEFORE INSTALLATION OF CABLE OR WIRE.

CONCRETE CONTROL CABINET BASE, TYPE 9, SPECIAL (5-3" & 1-2" CONDUITS)

CONCRETE CONTROL CABINET
BASE, TYPE 9, SPECIAL

STATE OF WISCONSIN
DEPARTMENT OF TRANSPORTATION

APPROVED
3/24/03
DATE
STATE ELECTRICAL ENGINEER FOR HIGHWAYS
FHWA

6

S.D.D. 9 C 6-3

S.D.D. 9 C 6-3

GENERAL NOTES

DETAILS OF CONSTRUCTION, MATERIALS AND WORKMANSHIP NOT SHOWN ON THIS DRAWING SHALL CONFORM TO THE PERTINENT REQUIREMENTS OF THE CONTRACT.

BASES SHALL BE EXCAVATED BY USE OF A CIRCULAR AUGER.

TOP SURFACES OF CONCRETE BASES SHALL BE TROWEL FINISHED AND LEVEL.

CONDUIT SIZES AND LOCATIONS SHALL BE AS SHOWN ON THE PLANS.

THE FINAL OR TERMINATING CONCRETE BASE IN A CONDUIT RUN SHALL HAVE A 6" EXIT STUB INSTALLED FOR FUTURE CABLING USE. THE EXIT STUB SHALL BE SIZED AS USED THROUGHOUT THE CONDUIT RUN AS SHOWN AT THE ENTRANCE OF THE BASE.

MINIMUM BENDING RADIUS OF CONDUIT IS EQUAL TO 6 X THE DIAMETER.

CONDUIT HEIGHT ABOVE CONCRETE BASES SHALL BE 1 INCH. ALL METALLIC CONDUIT ENDS SHALL BE REAMED AND THREADED.

ALL CONDUIT ENDS AT THE TOP OF CONCRETE BASES SHALL BE CAPPED IF METALLIC OR PLUGGED IF NONMETALLIC IMMEDIATELY AFTER PLACEMENT AND BEFORE CONCRETE IS POURED. CONDUITS IN WHICH WIRE OR CABLE IS NOT INSTALLED SHALL REMAIN CAPPED OR PLUGGED.

BELL ENDS SHALL BE INSTALLED ON ALL PVC CONDUIT EXPOSED AT THE TOP OF CONCRETE BASES BEFORE INSTALLATION OF CABLE OR WIRE.

ENDS OF CONDUIT INSTALLED BELOW GRADE FOR FUTURE USE SHALL BE CAPPED IF METALLIC OR PLUGGED IF NONMETALLIC.

WHEN REQUIRED TO CONNECT NONMETALLIC CONDUIT TO METALLIC CONDUIT, ONLY ADAPTER FITTINGS, U.L. LISTED FOR ELECTRICAL USE, SHALL BE USED.

IF A BASE REQUIRES A DEEP FORM BECAUSE OF LOOSE DIRT OR FILL, THE FORM SHALL BE REMOVED BEFORE BACKFILLING AROUND THE BASE. BACKFILL SHALL BE TAMPED TIGHT AGAINST THE BARE CONCRETE BASE IN LAYERS OF 1 FOOT OR LESS.

A NO. 4 AWG, STRANDED COPPER EQUIPMENT GROUNDING CONDUCTOR SHALL BE EXOTHERMICALLY WELDED TO THE EQUIPMENT GROUNDING ELECTRODE (GROUND ROD).

THE EQUIPMENT GROUNDING CONDUCTOR SHALL ENTER THE BASE THROUGH A 1 INCH CONDUIT INSTALLED FOR GROUNDING PURPOSES, LEAVING A 4 FOOT COIL OF WIRE ABOVE THE CONCRETE BASE. THE EQUIPMENT GROUNDING CONDUCTOR SHALL BE NEATLY COILED AND THE COILS TIED TOGETHER.

ANCHOR RODS SHALL BE 1" X 3'-6".

ANCHOR RODS SHALL BE THREADED 12" IN LENGTH ON EACH END OF THE ROD. ANCHOR RODS SHALL BE MANUFACTURED IN ACCORDANCE WITH SECTION 654.2.1 AND 641.2.2 OF THE STANDARD SPECIFICATIONS, ASTM A-449, OR ASTM A-687 (GRADE 105).

WHEN ANCHOR RODS USING THE ALTERNATE "L" BEND ARE FURNISHED, THE THE 4" "L" BEND SHALL BE IN ADDITION TO THE SPECIFIED ANCHOR ROD BAR LENGTH. THE "L" BEND END SHALL NOT BE THREADED.

WELDING OF THE ANCHOR RODS TO THE CAGE IS UNACCEPTABLE. TIE WIRES SHALL BE USED.

BAR STEEL REINFORCEMENT SHALL BE COATED WITH POWERED EPOXY RESIN IN ACCORDANCE WITH SECTION 505 OF THE STANDARD SPECIFICATIONS (LATEST EDITION).

(1) THE MINIMUM DEPTH OF CONDUIT EXITING THE CONCRETE BASE AND INSTALLED BELOW THE TRAVELED WAY SHALL BE 24 INCHES. THE MINIMUM DEPTH OF CONDUIT EXITING THE CONCRETE BASE THAT IS NOT INSTALLED BELOW THE TRAVELED WAY SHALL BE 18 INCHES. THE MAXIMUM DEPTH OF ALL CONDUIT SHALL BE 36 INCHES EXCEPT WITH WRITTEN APPROVAL BY THE ENGINEER.

(2) (4) 1" DIA. X 3'-6" ANCHOR RODS

(3) (6) NO. 4 X 4'-8" BAR STEEL REINFORCEMENT.

(4) (5) NO. 4 X 5'-1" BAR STEEL REINFORCEMENT @ 1'-0" C-C.

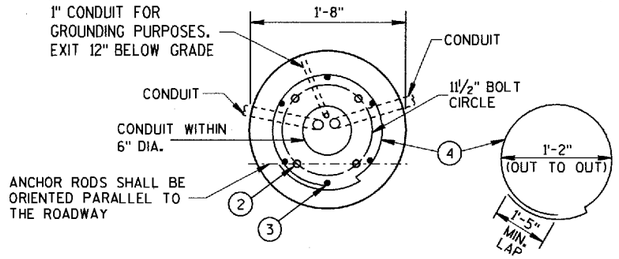

CONCRETE BASE, TYPE 6 (FOR 35' LIGHT POLES)

FORM DEPTH SHALL BE NO MORE THAN 6" BELOW GRADE ON THE LOWER SIDE OF BASE

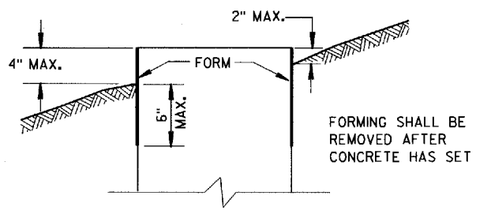

FORMING DETAIL

QUANTITY REQUIREMENTS	
APPROX. CUBIC YARDS OF CONCRETE	0.4
LBS. OF HOOP BAR STEEL	16
LBS. OF VERTICAL BAR STEEL	18

CONCRETE BASE, TYPE 6

STATE OF WISCONSIN
DEPARTMENT OF TRANSPORTATION

APPROVED
10/21/96
DATE
FHWA

STATE ELECTRICAL ENGINEER FOR HIGHWAYS

S.D.D. 9 C 7-1

S.D.D. 9 C 7-1

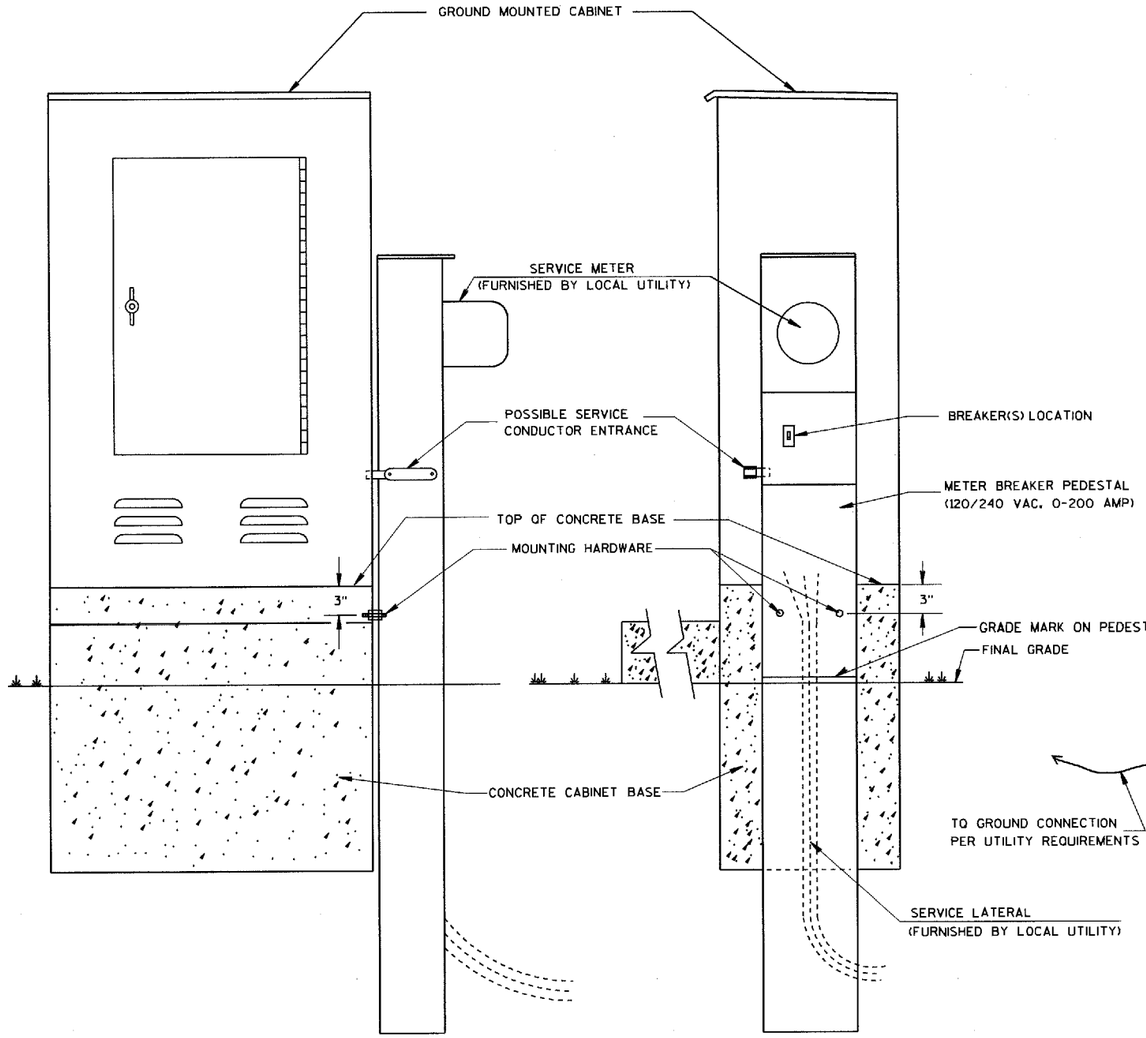

TYPICAL CABINET SERVICE INSTALLATION

GENERAL NOTES

DETAILS OF CONSTRUCTION, MATERIALS AND WORKMANSHIP NOT SHOWN ON THIS DRAWING SHALL CONFORM TO THE PERTINENT REQUIREMENTS OF THE CONTRACT.

THE EXACT LOCATION OF THE METER BREAKER PEDESTAL SHALL BE DETERMINED BY THE ENGINEER IN THE FIELD.

THE TYPE OF CONCRETE CABINET BASE TO BE INSTALLED SHALL BE AS CALLED FOR IN THE PLANS.

TO FACILITATE FLUSH MOUNTING OF THE METER BREAKER PEDESTAL AGAINST THE SIDE OF THE CABINET BASE, CONFER WITH THE LOCAL UTILITY TO DETERMINE WHICH SIDE OF THE CONCRETE BASE THE ELECTRIC SERVICE LATERAL WILL APPROACH. THEN FORM THAT INDICATED SIDE FOR FULL SIDE DEPTH.

SERVICE CONDUCTOR ENTRANCES SHALL BE RIGID METALLIC CONDUIT, NIPPLES AND/OR CONDULETS AS REQUIRED.

SERVICE CONDUCTOR ENTRANCES SHALL BE SIZED AND LOCATED AS REQUIRED BY THE LOCAL UTILITY AND IN ACCORDANCE WITH APPROPRIATE ARTICLES OF THE LATEST ACCEPTED NATIONAL ELECTRICAL CODE.

IF MORE THAN ONE GROUNDING ELECTRODE IS REQUIRED, THE DISTANCE APART SHALL BE 6 FEET OR PER LOCAL UTILITY REGULATIONS.

CABINET SERVICE INSTALLATION
(METER BREAKER PEDESTAL)

STATE OF WISCONSIN
DEPARTMENT OF TRANSPORTATION

APPROVED
10/21/96
DATE
FHWA

STATE ELECTRICAL ENGINEER FOR HIGHWAYS

S.D.D. 9 D 1-2

S.D.D. 9 D 1-2

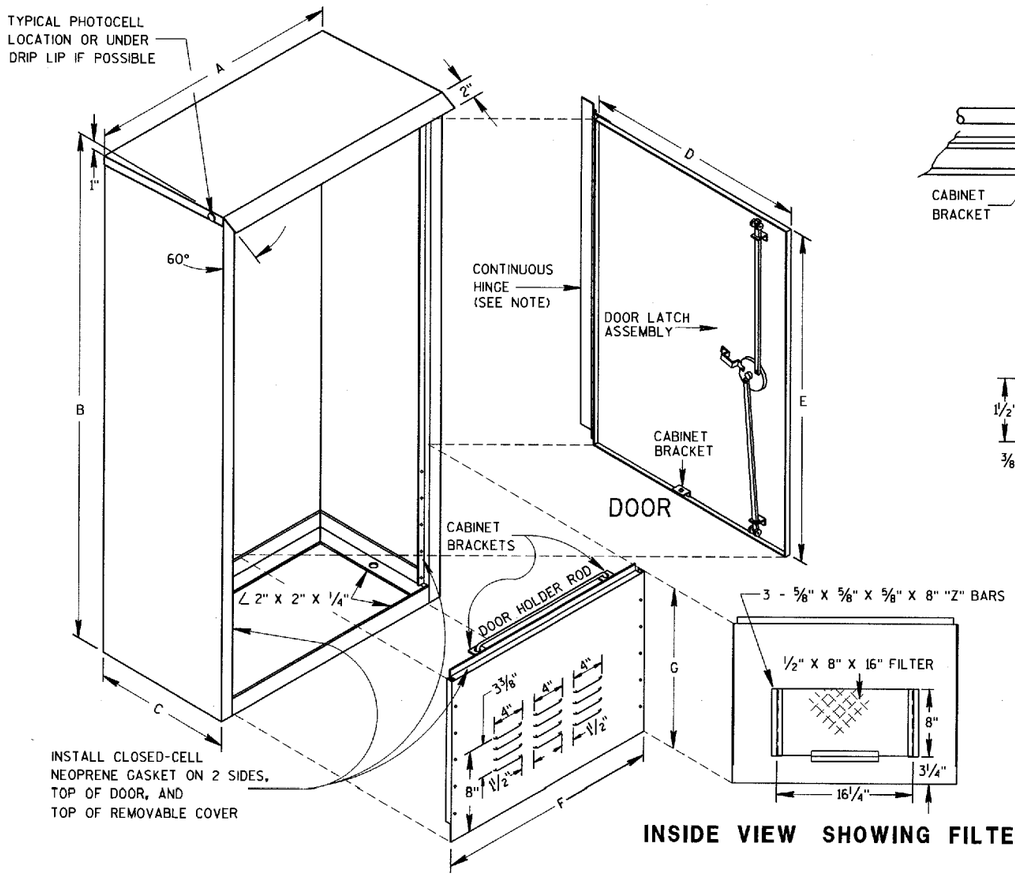

INSIDE VIEW SHOWING FILTER

REMOVABLE COVER

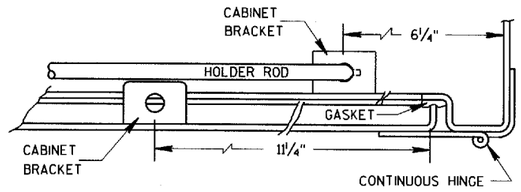

HINGE & DOOR HOLDER

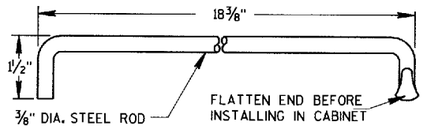

HOLDER ROD

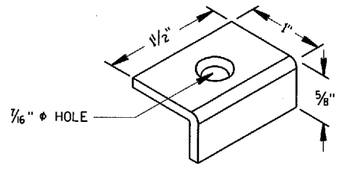

CABINET BRACKET

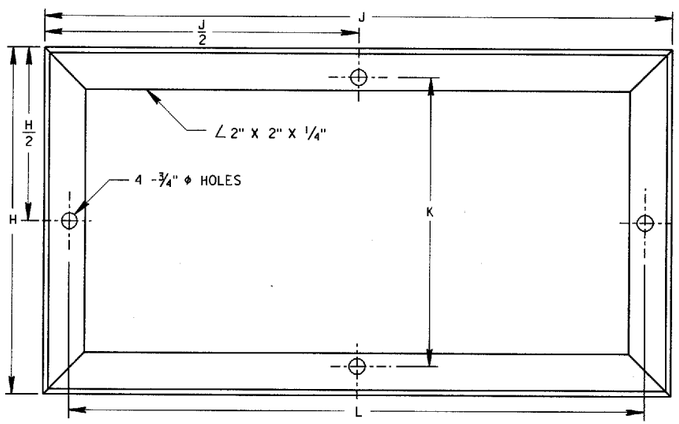

MOUNTING BASE

TABLE OF DIMENSIONS (INCHES)

MARK	CABINET TYPE		
	3060	3860	3866
A	30	38	38
B	60	60	66
C	16 1/2	16 1/2	24
D	26 1/2	34 3/4	33 3/4
E	38 3/4	38 3/4	38 3/4
F	26 1/2	34 3/4	33 3/4
G	19	19	25
H	16 1/2	16 1/2	24
H/2	8 1/4	8 1/4	12
J	30	38	38
J/2	15	19	19
K	13 3/4	13 3/4	21 1/4
L	27 1/2	35 1/2	35 1/2

GENERAL NOTES

DETAILS OF CONSTRUCTION, MATERIALS AND WORKMANSHIP NOT SHOWN ON THIS DRAWING SHALL CONFORM TO THE PERTINENT REQUIREMENTS OF THE STANDARD SPECIFICATIONS AND APPLICABLE SPECIAL PROVISIONS.

PRIME WITH PHOSPHATE TREATMENT AND PRIMER.

FINISH EXTERIOR SURFACES WITH RUSTOLEUM #906 SILVER GRAY OR APPROVED EQUAL.

FINISH INTERIOR WITH RUSTOLEUM #2766 HIGH GLOSS WHITE ENAMEL OR APPROVED EQUAL.

ALL SHEET METAL PARTS SHALL BE .125 INCH THICK ALUMINUM.

ALL SEAMS SHALL BE CONTINUOUSLY WELDED.

ALUMINUM SHALL BE TYPE 5052-H32.

CONTINUOUS HINGE SHALL BE HEAVY GAUGE ALUMINUM WITH 1/4" DIAMETER STAINLESS STEEL HINGE PIN. HINGE IS SECURED WITH 1/4" X 20 TPI STAINLESS STEEL CARRIAGE BOLTS AND STAINLESS STEEL NYLOCK NUTS.

A SINGLE PHOTOCELL SHALL BE LOCATED ON THE NORTH-NORTHEAST SIDE OF THE CABINET UNLESS OTHERWISE CALLED FOR IN THE SPECIAL PROVISIONS. THE PHOTOCELL SHALL BE PLACED AS SHOWN AND SHALL BE AN APPROVED TYPE.

DOOR LATCH ASSEMBLY TO BE PROVIDED WITH THREE-POINT LOCKING MECHANISM.

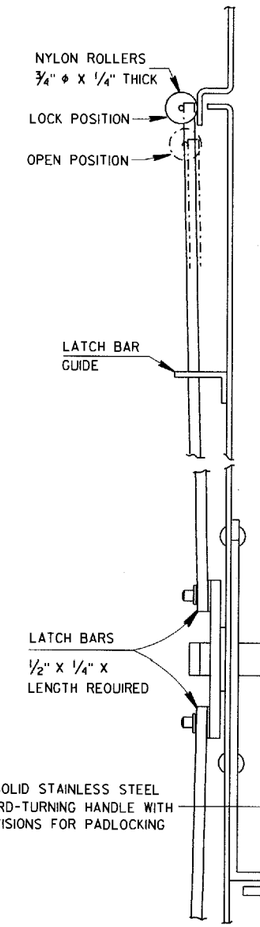

SIDE VIEW

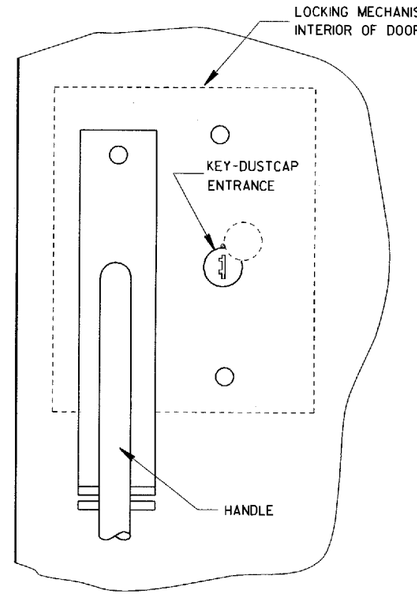

FRONT VIEW

LATCH ASSEMBLY

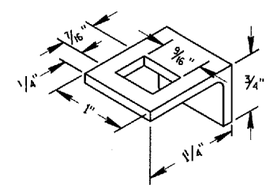

LATCH BAR GUIDE

SIGNAL OR LIGHTING CONTROL CABINET

STATE OF WISCONSIN
DEPARTMENT OF TRANSPORTATION

APPROVED
10/21/96
DATE
FHWA

STATE ELECTRICAL ENGINEER FOR HIGHWAYS

S.D.D. 9 D 2-2

S.D.D. 9 D 2-2

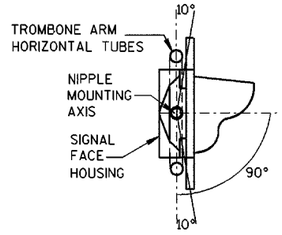

SECTION A-A

(10 DEGREES TILT REQUIREMENT OF FACE(S) IN THE TROMBONE MOUNTING)

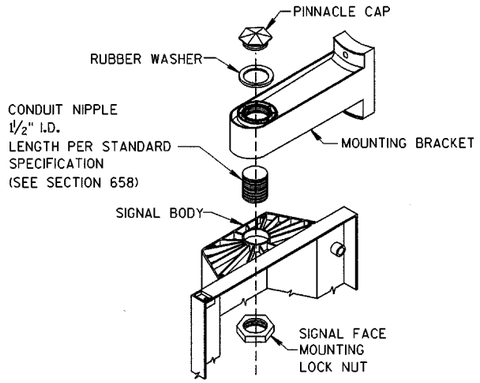

SIGNAL FACE MOUNTING DETAIL

(BANDED)

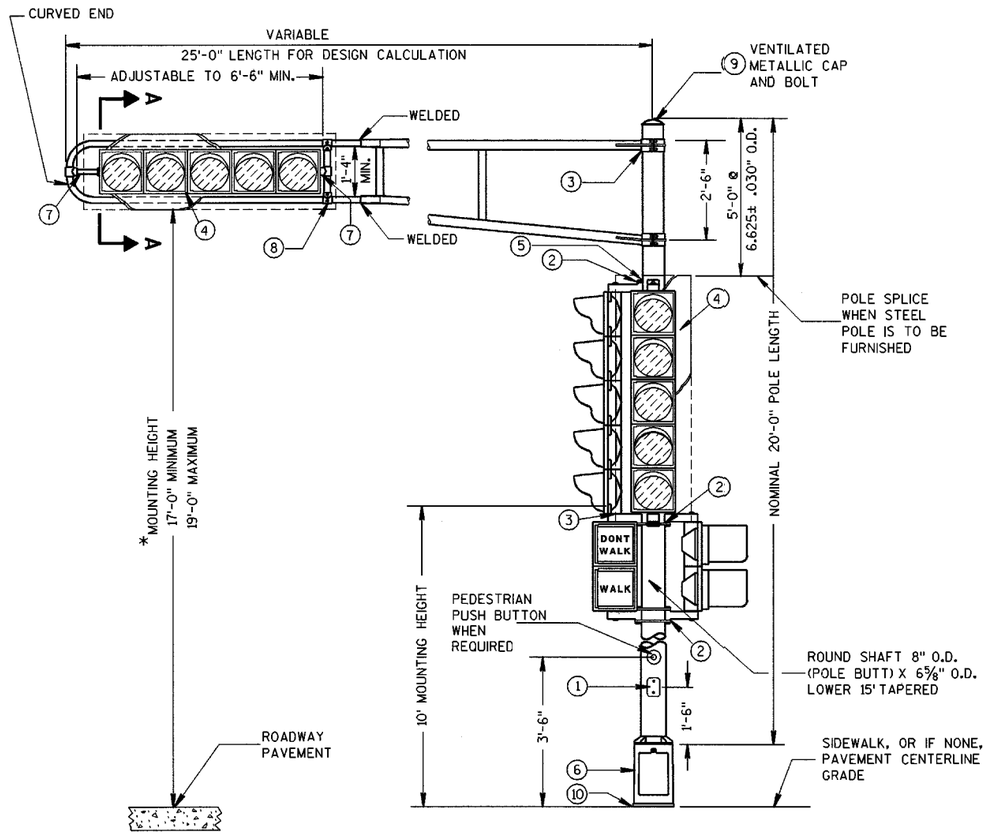

(MAXIMUM LOAD)

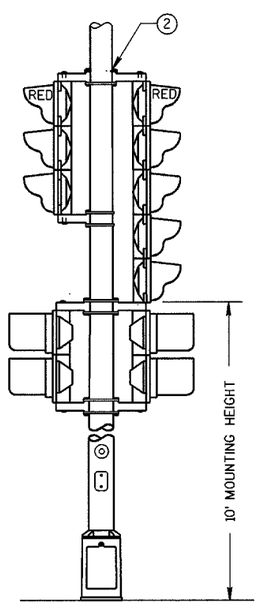

TYPICAL MOUNTING OF BACK TO BACK 3 AND 5 SECTION SIGNAL FACES

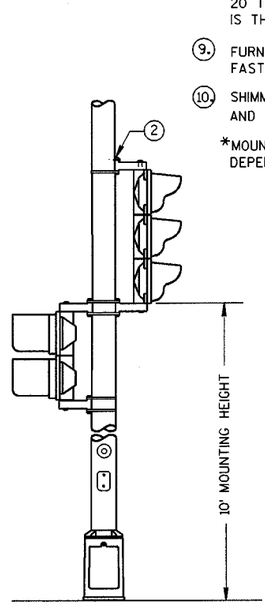

TYPICAL MOUNTING OF 3 SECTION SIGNAL FACE

TYPE 2 POLE MOUNTING CONFIGURATION

GENERAL NOTES

DETAILS OF CONSTRUCTION, MATERIALS AND WORKMANSHIP NOT SHOWN ON THIS DRAWING SHALL CONFORM TO THE PERTINENT REQUIREMENTS OF THE CONTRACT.

POLES SHALL BE EITHER ALUMINUM OR GALVANIZED STEEL AS CALLED FOR IN THE CONTRACT.

SECTION 657, POLES, OF THE STANDARD SPECIFICATIONS SHALL APPLY TO THIS DRAWING.

A PULL WIRE/ROPE IN ACCORDANCE WITH STANDARD SPECIFICATION 652 SHALL BE INSTALLED IN EACH TROMBONE ARM RACEWAY DURING THE MANUFACTURING PROCESS.

TYPE 2 ALUMINUM POLES SHALL BE CONSTRUCTED OF 6063-T6 ALUMINUM ALLOY. SLEEVING INSIDE THE POLE IS NOT ACCEPTABLE.

WHEN TRANSFORMER BASES ARE USED, WIRE CONNECTIONS SHALL BE MADE IN THE TRANSFORMER BASE.

1. 4" X 6" REINFORCED HANDHOLE & COVER ASSEMBLY WITH 2 (TWO) ¼" X ¾" - 20 TPI HEX HEAD STAINLESS STEEL BOLTS.
2. SIGNAL FACE MOUNTING BRACKETS. MOUNT WITH CAP SCREWS AND BANDING. (SEE STANDARD SPECIFICATIONS - SEC. 658)
3. GROMMETS, 1" CHASE NIPPLES OR 1" CLOSE CONDUIT NIPPLES WITH BUSHINGS SHALL BE PROVIDED FOR 1⅜" HOLE IN POLE SHAFT FOR WIRING.
4. SECURELY MOUNT DULL BLACK POLYCARBONATE BACKPLATES, PROJECTING 5" BEYOND ALL SIDES OF THE SIGNAL FACE HOUSING, WITH SELF-TAPPING STAINLESS STEEL SCREWS.
5. POLE MOUNTED SIGNAL FACES SHALL REQUIRE 1 OR MORE MOUNTING SPACERS UNDER THE TOP MOUNTING BRACKET(S) AS REQUIRED, TO PLUMB THE SIGNAL FACES.
6. CAST ALUMINUM TRANSFORMER BASE, WHEN REQUIRED.
7. MOUNTING BRACKET NIPPLES FOR THE SIGNAL FACE(S) SHALL BE 2 INCHES IN LENGTH AND 1½ INCHES IN DIAMETER. (SEE STANDARD SPECIFICATION - SECTION 658).
8. VERTICAL STRUT (ADJUSTABLE). ONE (1) SET SCREW (¼" X ¾" LONG- 20 TPI, STAINLESS STEEL, HEX HEAD) INTO EACH ARM MEMBER IF STRUT IS THE SLIDING TYPE.
9. FURNISH AND INSTALL VENTILATED, CAST, METALLIC (ALUMINUM ALLOY) CAPS. FASTEN CAPS WITH ONE (1) ¼" X ¾" - 20 TPI STAINLESS STEEL, HEX HEAD BOLT.
10. SHIMMING, IF NEEDED, SHALL BE LOCATED BETWEEN THE CONCRETE FOUNDATION AND THE TRANSFORMER BASE.

*MOUNTING HEIGHT LIMITATION DIMENSIONS OF THE TROMBONE MAST ARM WILL BE DEPENDENT UPON THE USE/NON-USE OF A TRANSFORMER BASE.

FOR MANUFACTURERS USE ONLY

WELD TO BE 100% R.T. OR U.T. TESTED AS PER THE REQUIREMENTS OF AWS D 1.5-88. RECORDS OF COMPLIANCE OF SUCH TESTING SHALL BE FURNISHED TO THE OFFICE OF DESIGN/BRIDGE FOR VERIFICATION AND APPROVAL.

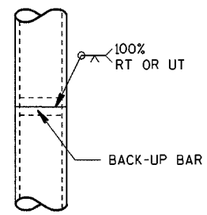

POLE SPLICE DETAIL

POLE MOUNTINGS FOR TRAFFIC SIGNALS TYPE 2

STATE OF WISCONSIN DEPARTMENT OF TRANSPORTATION

S.D.D. 9 E 1-4a

S.D.D. 9 E 1-4a

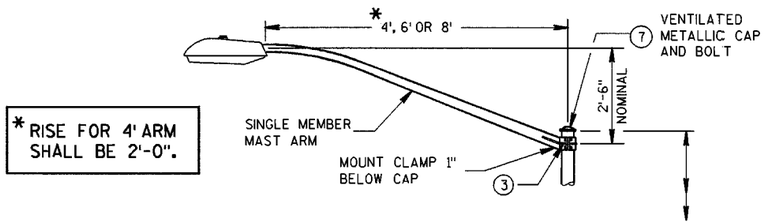

*RISE FOR 4' ARM SHALL BE 2'-0".

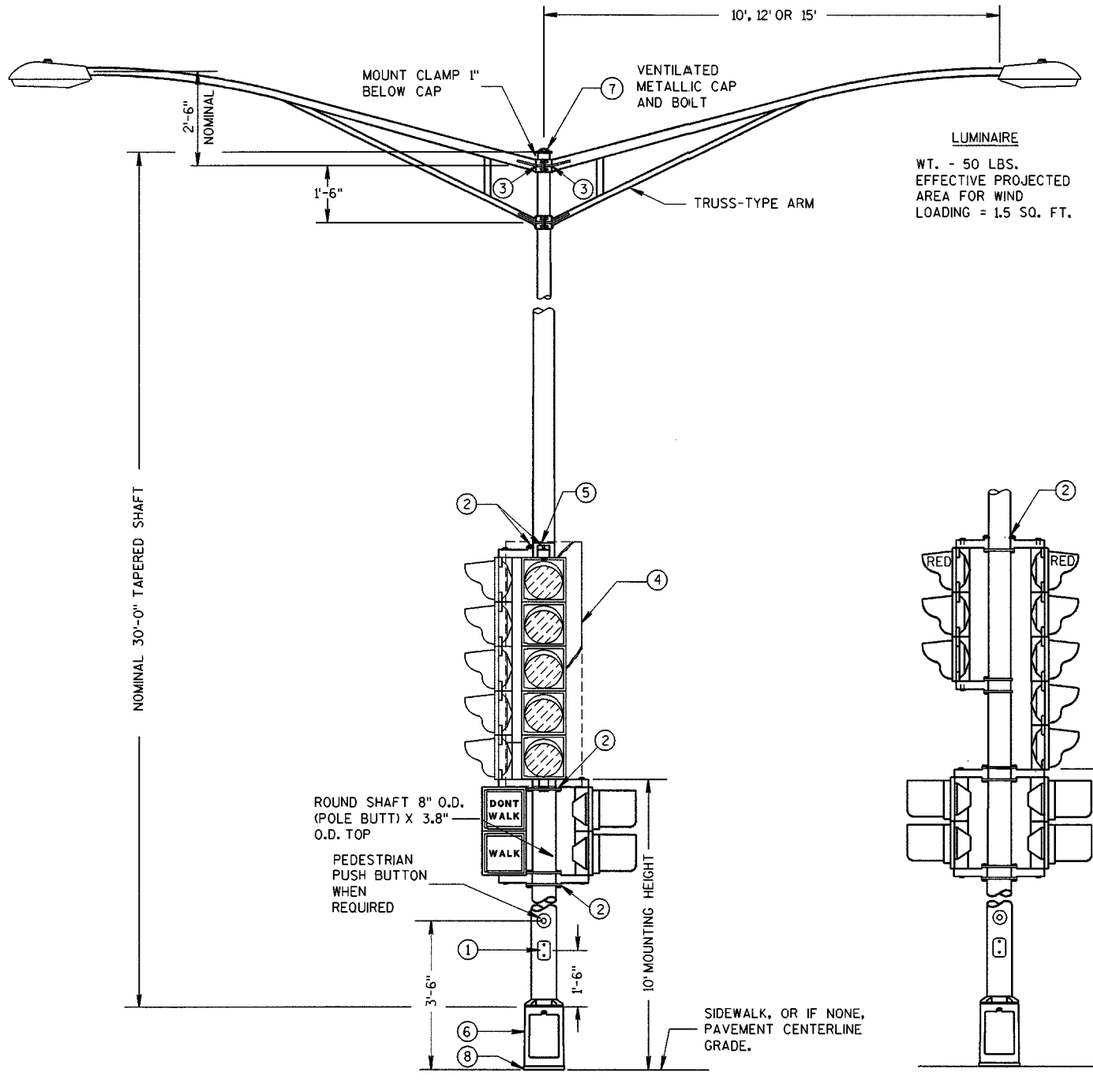

LUMINAIRE

WT. - 50 LBS.
EFFECTIVE PROJECTED AREA FOR WIND LOADING = 1.5 SQ. FT.

(MAXIMUM LOAD)

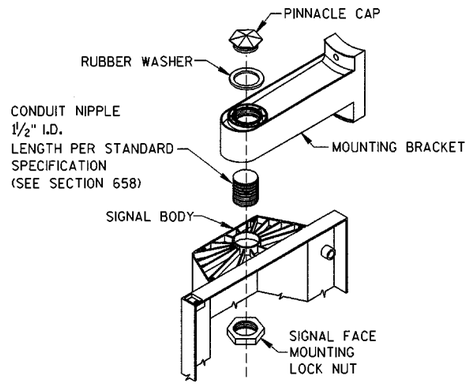

SIGNAL FACE MOUNTING DETAIL
(BANDED)

GENERAL NOTES

DETAILS OF CONSTRUCTION, MATERIALS AND WORKMANSHIP NOT SHOWN ON THIS DRAWING SHALL CONFORM TO THE PERTINENT REQUIREMENTS OF THE CONTRACT.

ALL TYPE 4 POLE MOUNTINGS SHALL BE DESIGNED TO INCLUDE TWIN 15' ARMS WITH LUMINAIRES.

POLES SHALL BE GALVANIZED STEEL.

SECTION 657, POLES, OF THE STANDARD SPECIFICATIONS SHALL APPLY TO THIS DRAWING.

THE SLIPFITTER END OF THE LUMINAIRE MAST ARM SHALL BE A NOMINAL 2⅜ INCHES IN OUTSIDE DIAMETER. THE STRAIGHT PORTION OF THE SLIPFITTER END OF THE LUMINAIRE MAST ARM SHALL BE A NOMINAL 12 INCHES IN LENGTH.

WHEN TRANSFORMER BASES ARE USED, CONNECTIONS SHALL BE MADE IN THE TRANSFORMER BASE.

1. 4" X 6" REINFORCED HANDHOLE & COVER ASSEMBLY WITH 2 (TWO) ¼" X ¾" - 20 TPI HEX HEAD STAINLESS STEEL BOLTS.
2. SIGNAL FACE MOUNTING BRACKETS, MOUNT WITH CAP SCREWS AND BANDING. (SEE STANDARD SPECIFICATIONS - SEC. 658).
3. GROMMETS, 1" CHASE NIPPLES OR 1" CLOSE CONDUIT NIPPLES WITH BUSHINGS SHALL BE PROVIDED FOR 1⅜" HOLE IN POLE SHAFT FOR WIRING.
4. SECURELY MOUNT DULL BLACK POLYCARBONATE BACKPLATES, PROJECTING 5" BEYOND ALL SIDES OF THE SIGNAL FACE HOUSING, WITH SELF-TAPPING STAINLESS STEEL SCREWS.
5. POLE MOUNTED SIGNAL FACES SHALL REQUIRE 1 OR MORE MOUNTING SPACERS UNDER THE TOP MOUNTING BRACKET(S) AS REQUIRED, TO PLUMB THE SIGNAL FACE.
6. CAST ALUMINUM TRANSFORMER BASE, WHEN REQUIRED.
7. FURNISH AND INSTALL VENTILATED, CAST, METALLIC (ALUMINUM ALLOY) CAPS. FASTEN CAPS WITH ONE (1) ¼" X ¾" - 20 TPI STAINLESS STEEL, HEX HEAD BOLT.
8. SHIMMING, IF NEEDED, SHALL BE LOCATED BETWEEN THE CONCRETE FOUNDATION AND THE TRANSFORMER BASE.

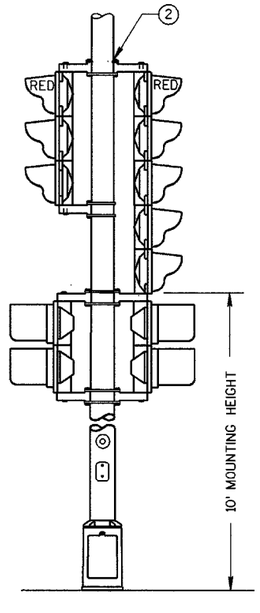

TYPICAL MOUNTING OF BACK TO BACK 3 AND 5 SECTION SIGNAL FACES

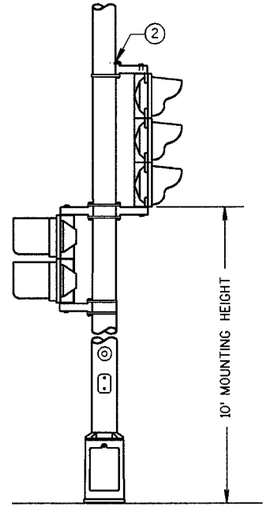

TYPICAL MOUNTING OF 3 SECTION SIGNAL FACE

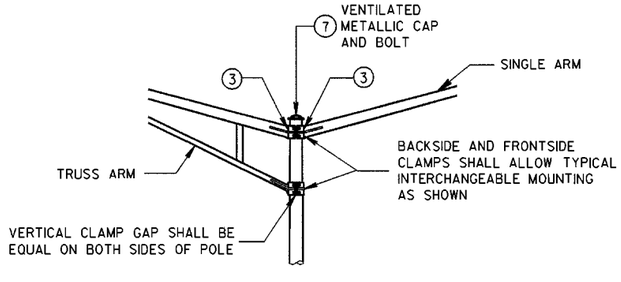

INTERCHANGEABLE MOUNTING DETAIL

TYPE 4 POLE MOUNTING CONFIGURATION

POLE MOUNTINGS FOR TRAFFIC SIGNALS AND LIGHTING UNITS, TYPE 4

STATE OF WISCONSIN
DEPARTMENT OF TRANSPORTATION

S.D.D. 9 E 1-4c

S.D.D. 9 E 1-4c

* RISE FOR 4' ARM SHALL BE 2'-0".

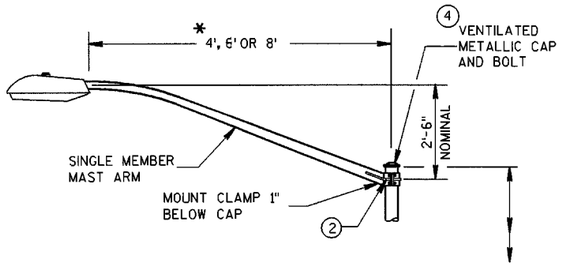

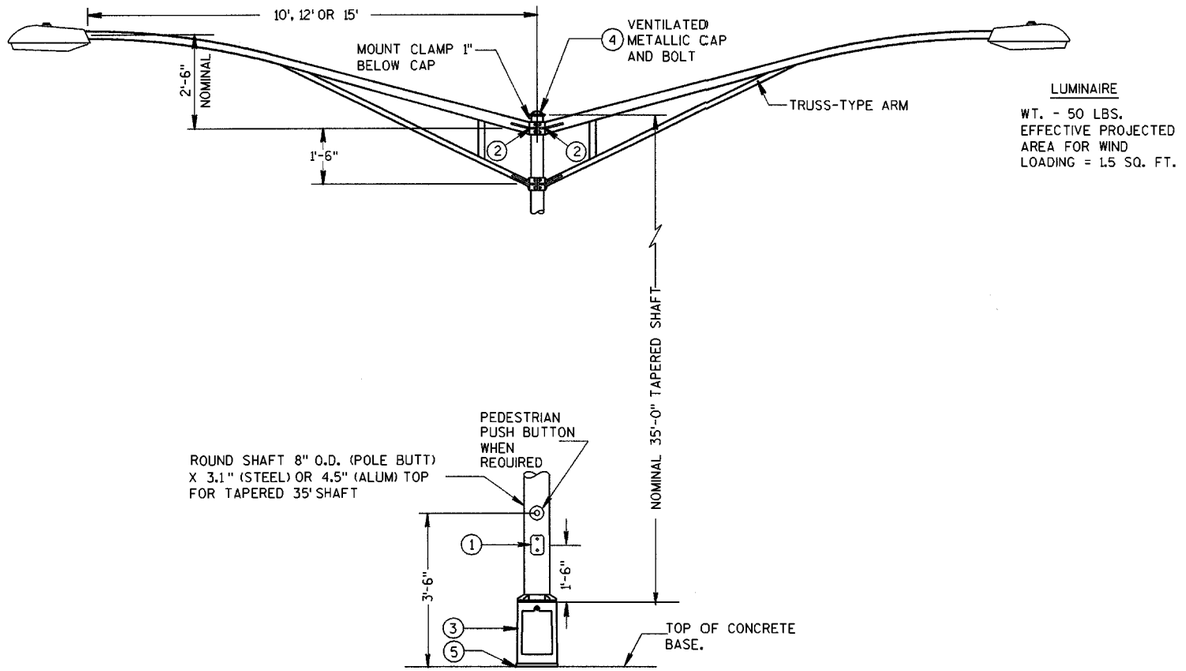

TYPE 6 POLE MOUNTING CONFIGURATION
(MAXIMUM LOAD)
LIGHTING ONLY

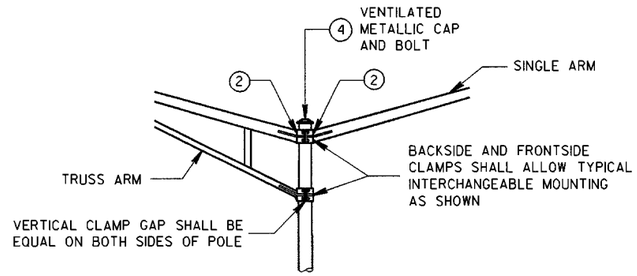

INTERCHANGEABLE MOUNTING DETAIL

GENERAL NOTES

DETAILS OF CONSTRUCTION, MATERIALS AND WORKMANSHIP NOT SHOWN ON THIS DRAWING SHALL CONFORM TO THE PERTINENT REQUIREMENTS OF THE CONTRACT.

ALL TYPE 6 POLE MOUNTINGS SHALL BE DESIGNED TO INCLUDE TWIN 15' ARMS WITH LUMINAIRES.

POLES SHALL BE EITHER GALVANIZED STEEL OR ALUMINUM, AS CALLED FOR IN THE CONTRACT.

TYPE 6 ALUMINUM POLES, SHALL BE CONSTRUCTED OF 6063-T6 ALUMINUM ALLOY. SLEEVING INSIDE THE POLE IS NOT ACCEPTABLE.

THE SLIPFITTER END OF THE LUMINAIRE MAST ARM SHALL BE A NOMINAL 2⅜ INCHES IN OUTSIDE DIAMETER. THE STRAIGHT PORTION OF THE SLIPFITTER END OF THE LUMINAIRE ARM SHALL BE A NOMINAL 12 INCHES IN LENGTH.

WHEN TRANSFORMER BASES ARE USED, WIRE CONNECTIONS SHALL BE MADE IN THE TRANSFORMER BASE.

1. 4" x 6" REINFORCED HANDHOLE & COVER ASSEMBLY WITH 2 (TWO) ¼" X ¾" - 20 TPI HEX HEAD STAINLESS STEEL BOLTS.
2. GROMMETS, 1" CHASE NIPPLES OR 1" CLOSE CONDUIT NIPPLES WITH BUSHINGS SHALL BE PROVIDED FOR 1⅜" HOLE IN POLE SHAFT FOR WIRING.
3. CAST ALUMINUM TRANSFORMER BASE, WHEN REQUIRED.
4. FURNISH AND INSTALL VENTILATED, CAST, METALLIC (ALUMINUM ALLOY) CAPS. FASTEN CAPS WITH ONE (1) ¼" X ¾" - 20 TPI STAINLESS STEEL, HEX HEAD BOLT.
5. SHIMMING, IF NEEDED, SHALL BE LOCATED BETWEEN THE CONCRETE FOUNDATION AND THE TRANSFORMER BASE.

POLE MOUNTINGS FOR LIGHTING UNITS, TYPE 6 (35 FEET)

STATE OF WISCONSIN
DEPARTMENT OF TRANSPORTATION

S.D.D. 9 E 1-4e

S.D.D. 9 E 1-4e

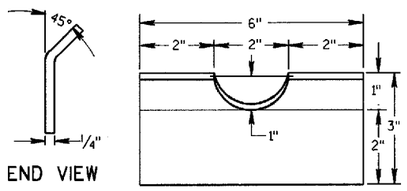

RECTANGULAR CLAMP SHIM
(4 TO A SET)

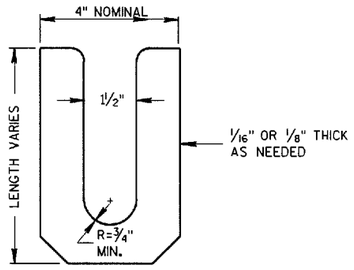

LEVELING SHIM (15)
SHALL BE ALUMINUM

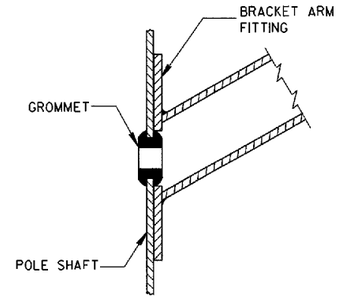

TYPICAL APPLICATION OF GROMMET IN POLE SHAFT

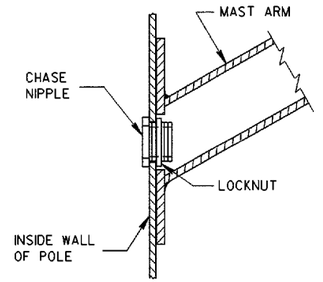

TYPICAL APPLICATION OF CHASE NIPPLE IN POLE SHAFT

GENERAL NOTES

CLAMP BOLT-NUT TIGHTENING TORQUE SHALL BE INDICATED BY INDENT STAMPING (1/2 INCH NUMERALS AND LETTERS) OR WEATHERPROOF PRINTING ON THE INSIDE OF THE CLAMP THAT IS WELDED TO THE ARM MEMBER.

(10.) 4.5" I.D. FOR LUMINAIRE MAST ARM CLAMP.
6.625" I.D. FOR TROMBONE MAST ARM CLAMP.

(11.) INDIVIDUAL BASE PLATE ANCHOR ROD COVERS. (4 REQUIRED)

(12.) BASE PLATE SLOTTED TO ACCEPT 11" THROUGH 12" BOLT CIRCLE USING 1" DIAMETER ANCHOR RODS.

(13.) OUTSIDE SHIM DIAMETER - (4.5" O.D. FOR LUMINAIRE MAST ARM)
(6.625" O.D. FOR TROMBONE MAST ARM)

(14.) VARIABLE SHIM THICKNESS - (0.10", 0.25", 0.35", 0.53" OR 0.70")

SHIM THICKNESS FOR TROMBONE MAST ARMS MAY BE TYPICALLY 0.25", 0.35", 0.53" OR 0.70".

SHIM THICKNESS FOR LUMINAIRE MAST ARMS MAY BE TYPICALLY 0.10", 0.25" OR 0.35".

SHIM MATERIAL SHALL BE ALUMINUM ALLOY.

SHIM THICKNESS SHALL BE IMPRESSED INTO EACH SHIM. NUMERALS SHALL BE 1/4" HIGH AND LEGIBLE.

THE CONTRACTOR SHALL SUBMIT TWO COPIES OF ALL SHIM SHOP DRAWINGS TO THE ENGINEER FOR APPROVAL.

(15.) LEVELING SHIMS, DESIGNED FOR THE PURPOSE, SHALL BE USED WHEN PLUMBING POLES. THE USE OF WASHERS IN LIEU OF PROPER LEVELING SHIMS IS NOT ACCEPTABLE. LEVELING SHIMS SHALL BE USED ONLY BETWEEN THE TOP OF THE CONCRETE BASE AND A METALLIC BASE PLATE.

SHIMS SHALL BE LONG ENOUGH AND WIDE ENOUGH TO COMPLETELY COVER THE AREA UNDER THE LENGTH AND WIDTH OF THE BASE MOUNTING FLANGE.

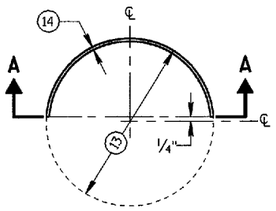

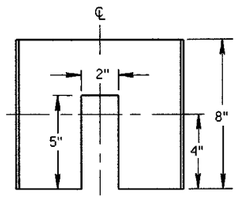

CIRCULAR CLAMP SHIM
(2 TO A SET)

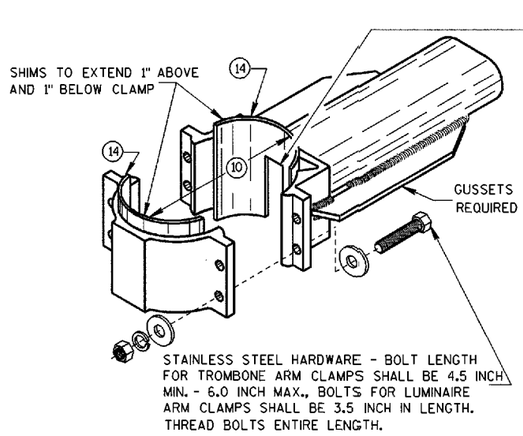

TYPICAL TROMBONE MAST ARM AND SINGLE LUMINAIRE MAST ARM MOUNTING CLAMP

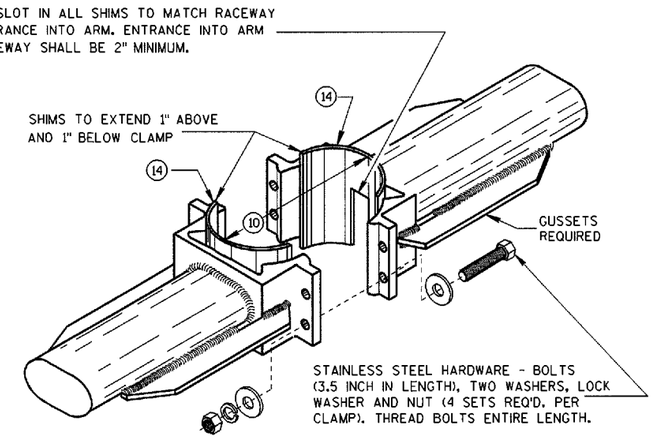

TYPICAL LUMINAIRE MAST ARM (DOUBLE) MOUNTING BRACKETS

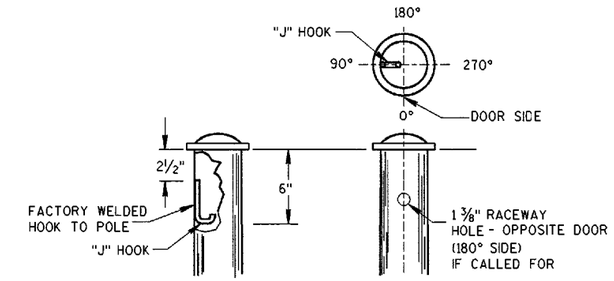

TYPICAL "J" HOOK LOCATION

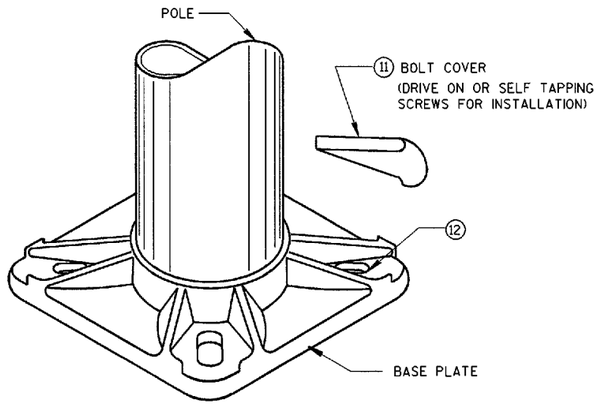

BASE PLATE

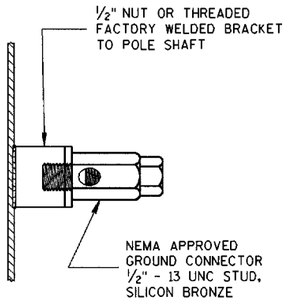

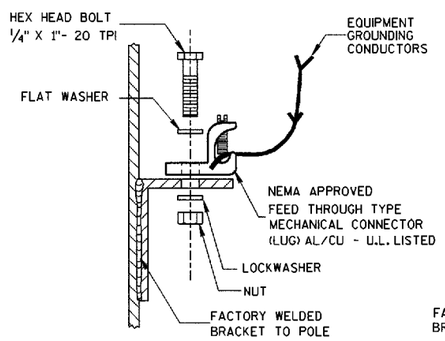

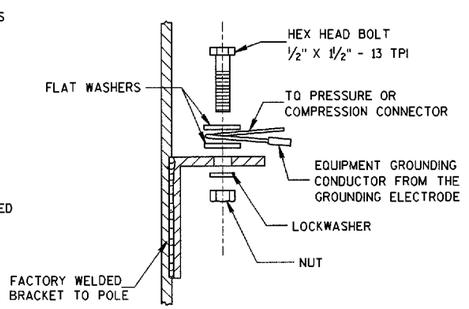

TYPICAL GROUNDING CONNECTIONS
NUT, BOLT AND WASHERS SHALL BE STAINLESS STEEL

HARDWARE DETAILS FOR POLE MOUNTINGS

STATE OF WISCONSIN
DEPARTMENT OF TRANSPORTATION

APPROVED 3/05/01 DATE
STATE ELECTRICAL ENGINEER FOR HIGHWAYS
FHWA

S.D.D. 9 E 1-4g

S.D.D. 9 E 1-4g

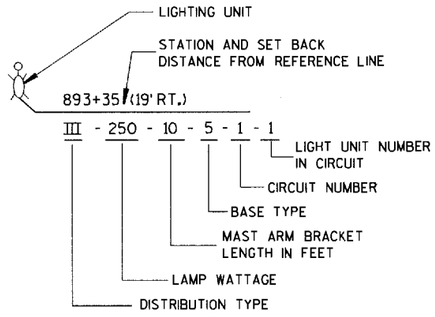

LIGHTING UNIT CODE
(TYPICAL)

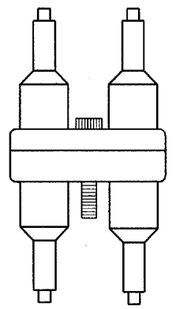

DETAIL "A"
DOUBLE POLE

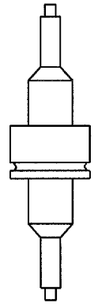

DETAIL "B"
SINGLE POLE

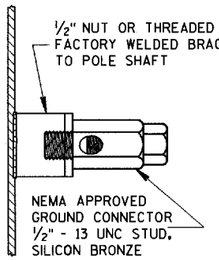

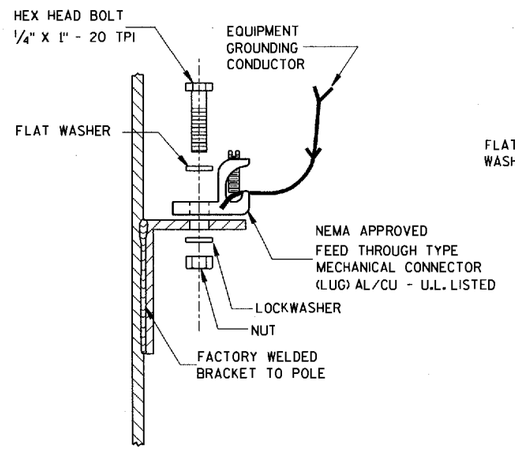

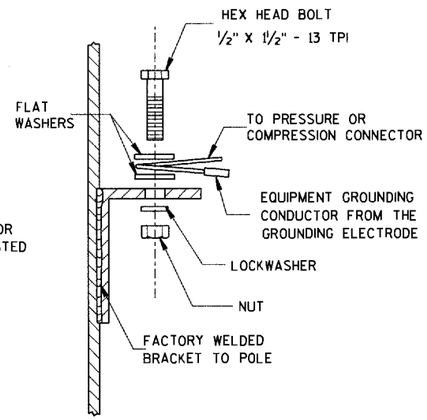

TYPICAL GROUNDING CONNECTIONS
NUT, BOLT, WASHERS AND LOCKWASHERS SHALL BE STAINLESS STEEL

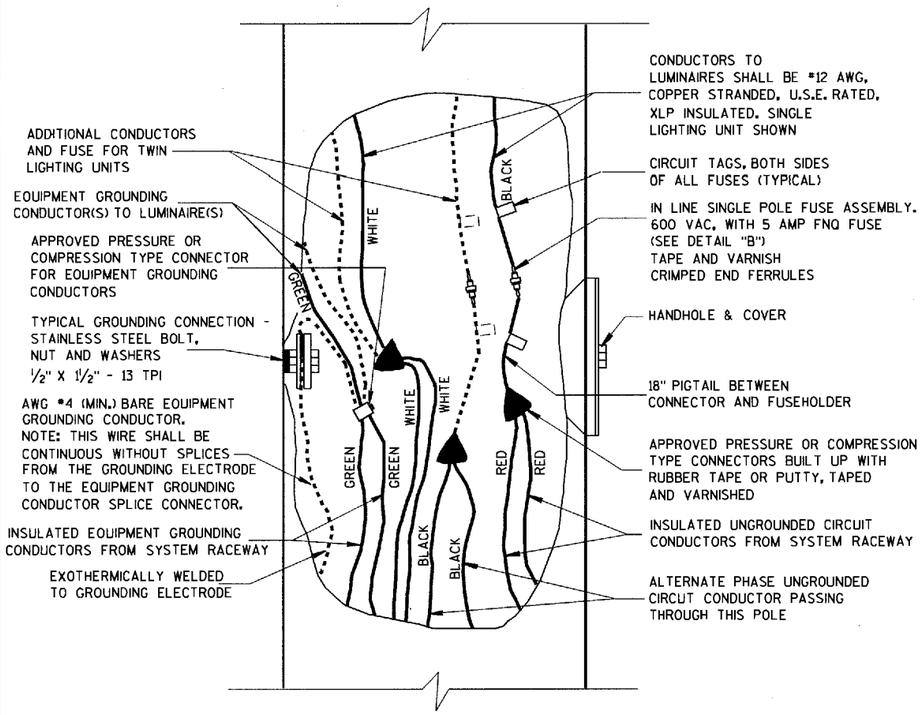

3 WIRE - 120, 240 OR 480 VAC (UNGROUNDED CONDUCTOR) WITH GROUNDED CONDUCTOR AND WITH EQUIPMENT GROUNDING CONDUCTOR

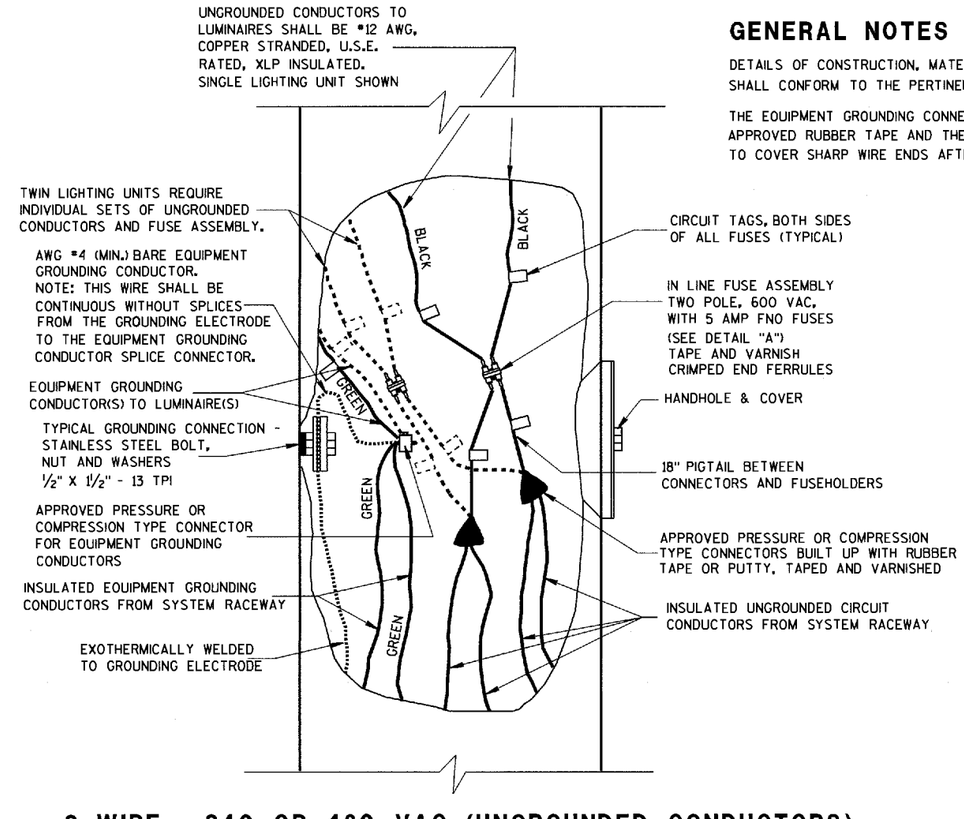

2 WIRE - 240 OR 480 VAC (UNGROUNDED CONDUCTORS) WITH EQUIPMENT GROUNDING CONDUCTOR

GENERAL NOTES

DETAILS OF CONSTRUCTION, MATERIALS AND WORKMANSHIP NOT SHOWN ON THIS DRAWING SHALL CONFORM TO THE PERTINENT REQUIREMENTS OF THE CONTRACT.

THE EQUIPMENT GROUNDING CONNECTOR SHALL BE TAPED WITH 3 WRAPS (MINIMUM) OF APPROVED RUBBER TAPE AND THEN 3 WRAPS (MINIMUM) OF APPROVED VINYL TAPE TO COVER SHARP WIRE ENDS AFTER THE CONNECTION IS COMPLETED.

NON-FREEWAY LIGHTING UNIT POLE WIRING

STATE OF WISCONSIN
DEPARTMENT OF TRANSPORTATION

APPROVED
10/21/96
DATE
STATE ELECTRICAL ENGINEER FOR HIGHWAYS
FHWA

S.D.D. 9 E 3-2

S.D.D. 9 E 3-2

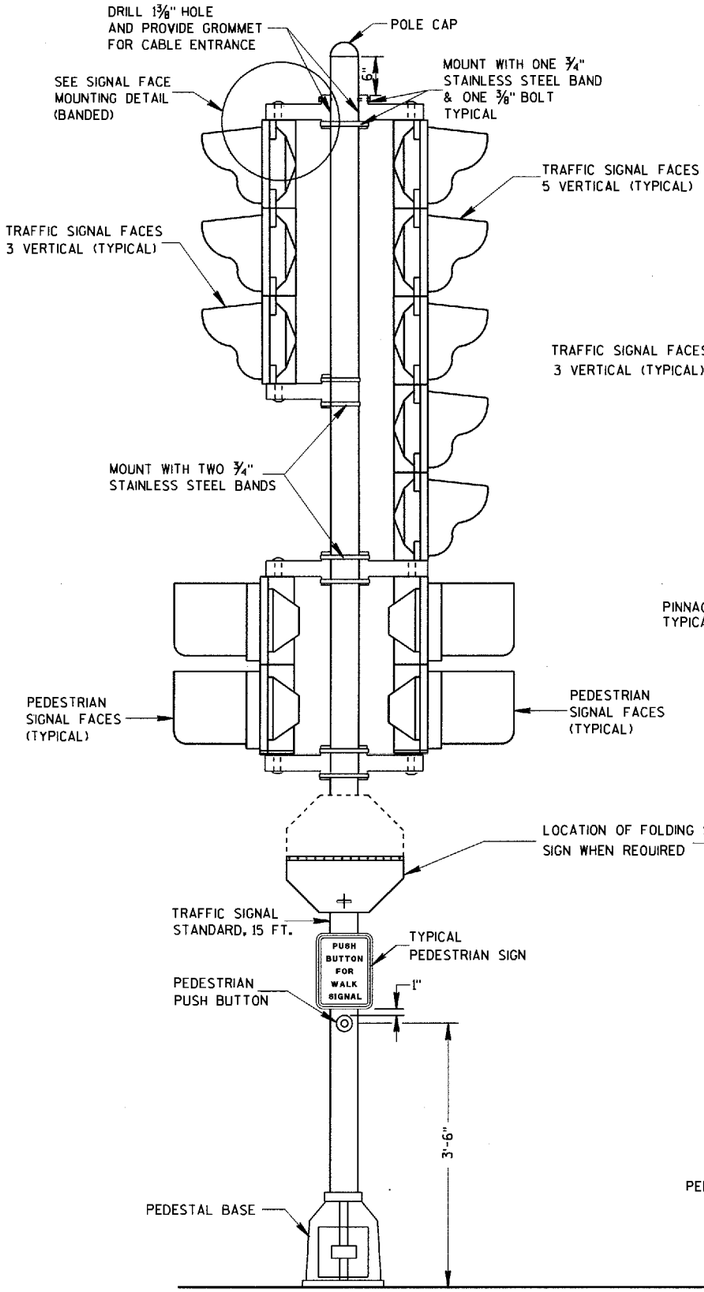

TRAFFIC SIGNAL STANDARD-15 FT.

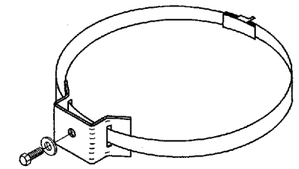

TYPICAL SIGN MOUNTING BAND
(TOP AND BOTTOM OF SIGN)

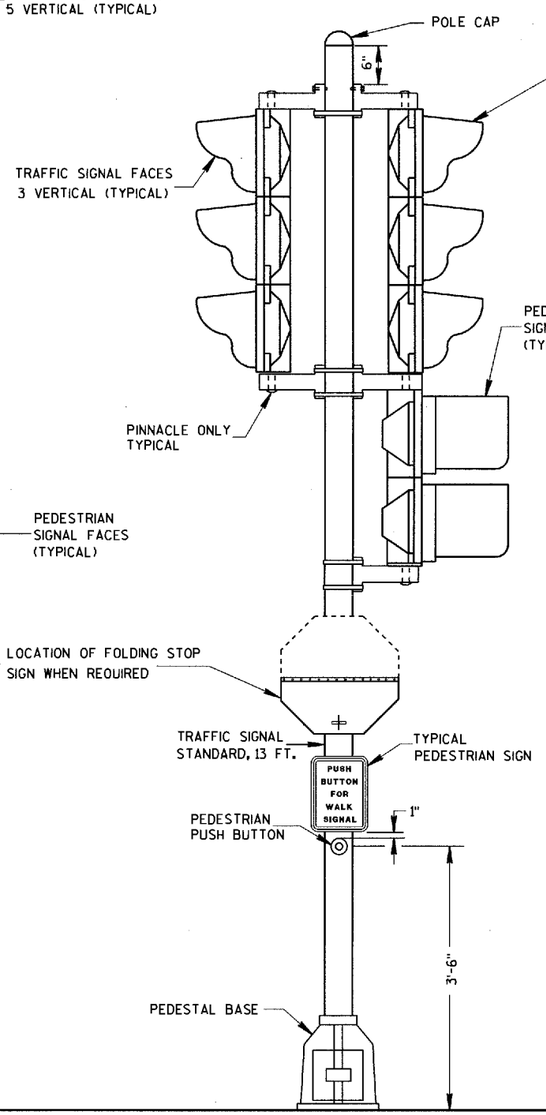

TRAFFIC SIGNAL STANDARD-13 FT.

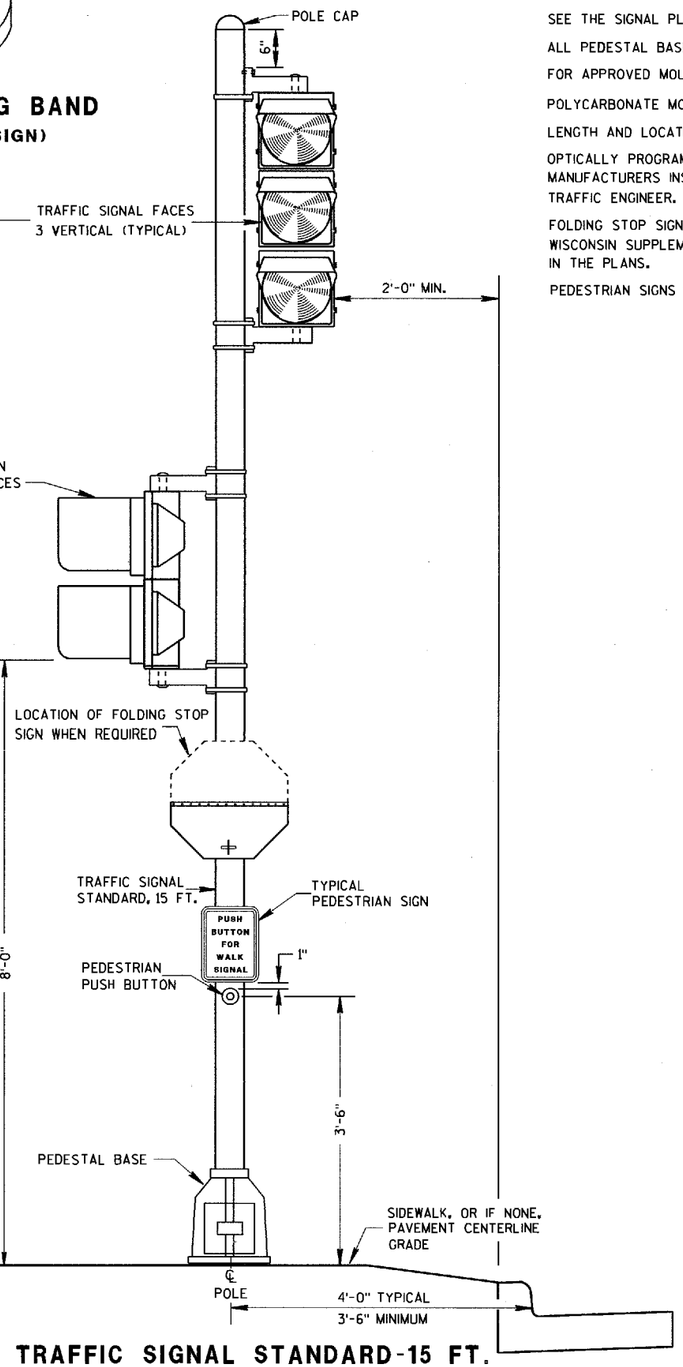

TRAFFIC SIGNAL STANDARD-15 FT.
3M MOUNTING (TYPICAL)

GENERAL NOTES

DETAILS OF CONSTRUCTION, MATERIALS AND WORKMANSHIP NOT SHOWN ON THIS DRAWING SHALL CONFORM TO THE PERTINENT REQUIREMENTS OF THE CONTRACT.

SEE THE SIGNAL PLAN FOR REQUIRED SIGNAL FACE SIZES.

ALL PEDESTAL BASES SHALL BE MOUNTED ON CONCRETE BASE - TYPE 1.

FOR APPROVED MOUNTING HARDWARE, SEE THE CONTRACT SPECIAL PROVISIONS.

POLYCARBONATE MOUNTING BRACKETS SHALL BE USED.

LENGTH AND LOCATION OF TRAFFIC SIGNAL STANDARDS SHALL BE AS SHOWN ON THE PLANS.

OPTICALLY PROGRAMMED SIGNAL FACES SHALL BE MASKED IN ACCORDANCE WITH MANUFACTURERS INSTRUCTIONS, AND UNDER THE DIRECTIONS OF THE DISTRICT TRAFFIC ENGINEER.

FOLDING STOP SIGNS SHALL BE IN ACCORDANCE WITH THE MUTCD AND/OR THE LATEST WISCONSIN SUPPLEMENT. THE SIGNS SHALL BE SIZED AND LOCATED AS CALLED FOR IN IN THE PLANS.

PEDESTRIAN SIGNS SHALL BE AS DESIGNATED IN THE PLANS.

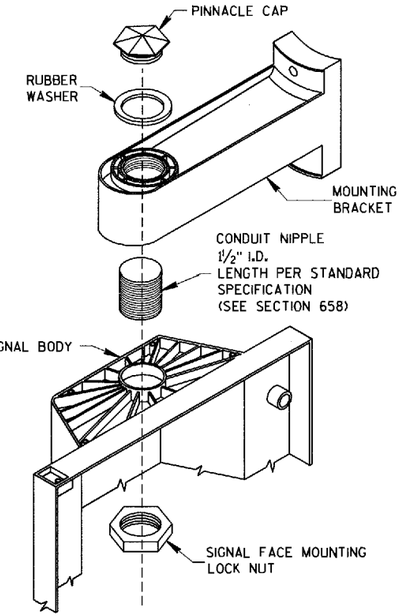

SIGNAL FACE MOUNTING DETAIL
(BANDED)

TRAFFIC SIGNAL STANDARD
POLY BRACKET MOUNTINGS (TYPICAL)
13 FT. OR 15 FT.

STATE OF WISCONSIN
DEPARTMENT OF TRANSPORTATION

APPROVED
10/21/96
DATE
STATE ELECTRICAL ENGINEER FOR HIGHWAYS
FHWA

S.D.D. 9 E 6-1

S.D.D. 9 E 6-1

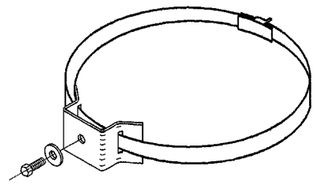

TYPICAL SIGN MOUNTING BAND

(TOP AND BOTTOM OF SIGN)

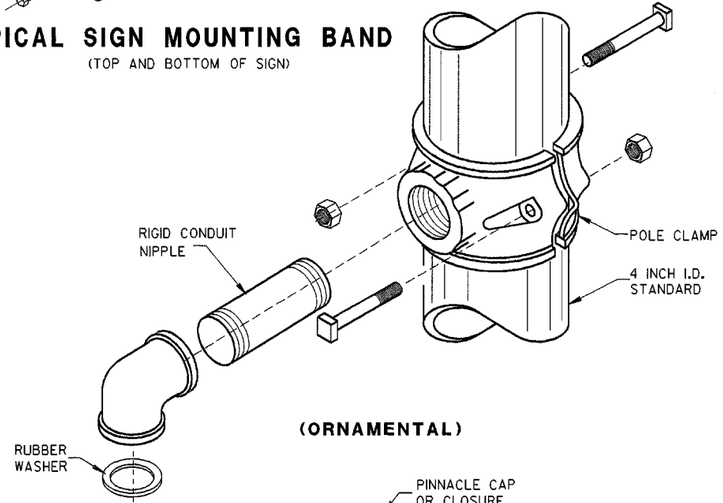

SIGNAL FACE MOUNTING DETAILS

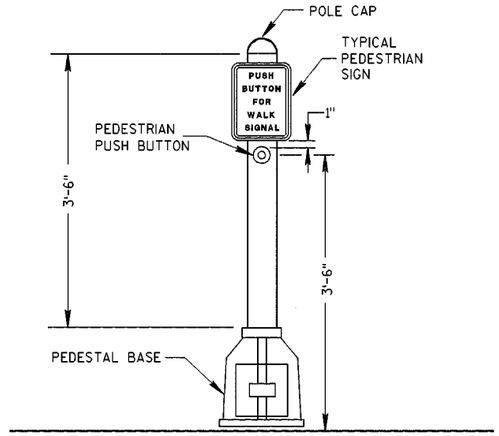

PEDESTRIAN PUSH BUTTON TYPICAL MOUNTING

GENERAL NOTES

DETAILS OF CONSTRUCTION, MATERIALS AND WORKMANSHIP NOT SHOWN ON THIS DRAWING SHALL CONFORM TO THE PERTINENT REQUIREMENTS OF THE CONTRACT.

SEE THE SIGNAL PLAN FOR REQUIRED SIGNAL FACE SIZES.

LOCATIONS SHALL BE AS SHOWN ON THE PLANS.

ALL PEDESTAL BASES SHALL BE MOUNTED ON CONCRETE BASE - TYPE 1.

FOR APPROVED MOUNTING HARDWARE, SEE THE CONTRACT SPECIFICATIONS.

POLYCARBONATE SIGNAL FACE MOUNTING BRACKETS SHALL BE USED UNLESS ORNAMENTAL POLE CLAMPS ARE SPECIFIED.

LENGTH OF TRAFFIC STANDARDS SHALL BE AS SHOWN ON THE PLANS.

MOUNTINGS AND BRACKETS SHALL BE AS SHOWN ON THE PLANS OR DESCRIBED IN THE SPECIAL PROVISIONS (BY THE DISTRICT TRAFFIC ENGINEER).

PEDESTRIAN SIGNS SHALL BE AS DESIGNATED IN THE PLANS.

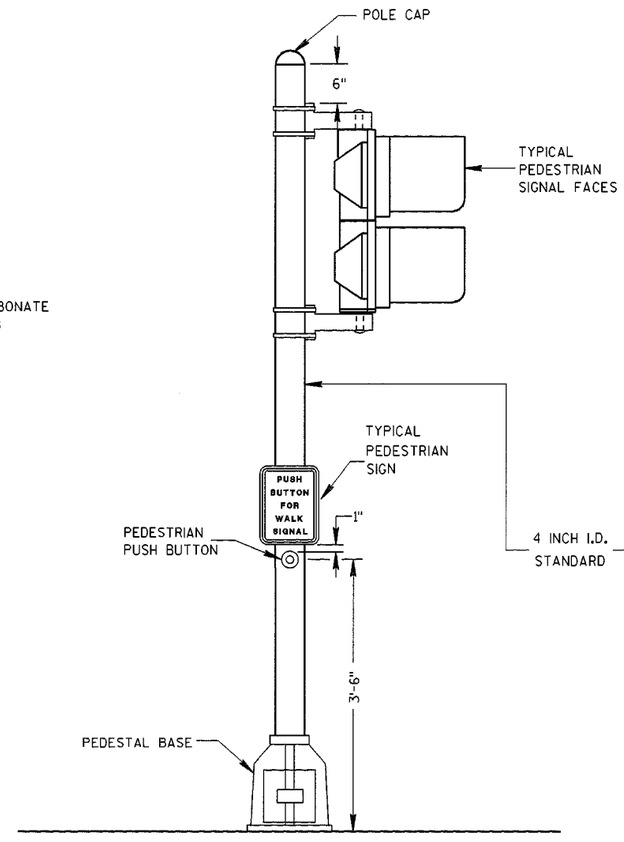

PEDESTRIAN FACE STANDARD-10 FT.

(WALK-DON'T WALK)

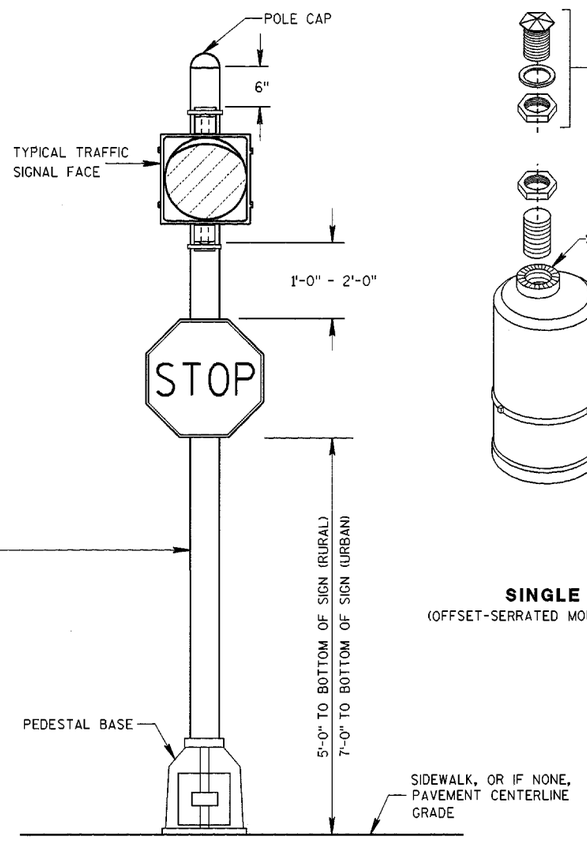

STANDARD FLASHER.

10 FOOT, 13 FOOT OR 15 FOOT AS REQUIRED

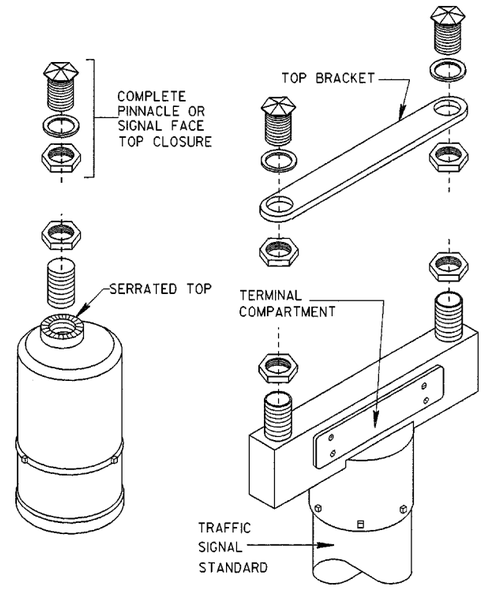

SINGLE
(OFFSET-SERRATED MOUNTING)

DOUBLE
(SERRATED MOUNTING)

SLIPFITTERS

TRAFFIC SIGNAL STANDARD
PEDESTRIAN AND FLASHER
TYPICAL MOUNTING DETAILS

STATE OF WISCONSIN
DEPARTMENT OF TRANSPORTATION

APPROVED
3/24/03
DATE
STATE ELECTRICAL ENGINEER FOR HIGHWAYS
FHWA

6

S.D.D. 9 E 7-2

S.D.D. 9 E 7-2

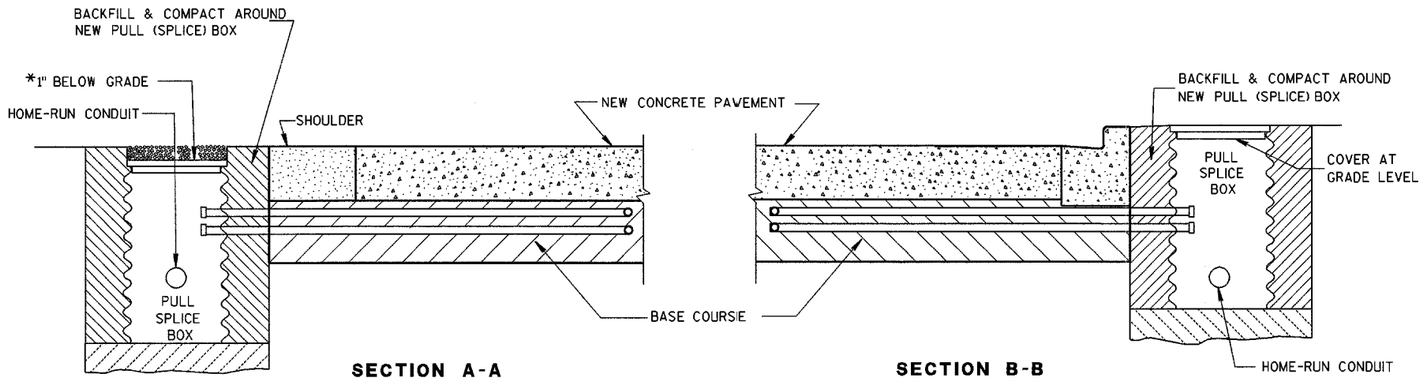

SECTION A-A
NO CURB & GUTTER

SECTION B-B
CURB & GUTTER

*RECESS PULL (SPLICE) BOX SO THAT THE COVER IS 3" BELOW GRADE IN SHOULDER AREAS OF CRUSHED AGGREGATE. BACKFILL OVER COVER WITH THE CRUSHED AGGREGATE TO BRING THE AREA TO GRADE LEVEL.

LOOP DETECTOR INSTALLATION DETAIL

GENERAL NOTES

DETAILS OF CONSTRUCTION, MATERIALS AND WORKMANSHIP NOT SHOWN ON THIS DRAWING SHALL CONFORM TO THE PERTINENT REQUIREMENTS OF THE CONTRACT.

LOOP SIZE, CONFIGURATION LOCATION, NUMBER OF TURNS OF WIRE AND ASSOCIATED SIGNAL PHASE SHALL BE AS SHOWN ON THE PLANS.

PITCH LEAD OUT CONDUIT TO DRAIN TO ROADSIDE PULL (SPLICE) BOX.

SPLICES SHALL BE INSTALLED BY USING CAST IN PLACE SPLICE KITS SUCH AS 3M TYPE 82A1 OR APPROVED EQUAL. NON-INSULATED BUTT SPLICES TO FIT #12 AWG STRANDED WIRE SHALL BE USED. SPLICES SHALL BE SOLDERED AND INSULATED FROM EACH OTHER AS PER INSTRUCTIONS INCLUDED IN THE SPLICE KIT.

THE GROUND RESISTANCE READING OF THE LOOP SHALL READ "INFINITY" TO GROUND ON AN OHMMETER USING A MULTIPLIER SCALE OF 1 MEGOHM AND AN INPUT RESISTANCE OF 11 MEGOHMS MINIMUM BEFORE SPLICING THE LOOP TO THE LEAD-IN CABLE.

AFTER SPLICING THE LOOP WIRE TO THE LOOP LEAD-IN CABLE, THE CONTRACTOR SHALL MEASURE INDUCTANCE, GROUND RESISTANCE AND WIRE RESISTANCE AT THE CABINET END OF THE LEAD-IN CABLE AND FURNISH A COPY OF THE READINGS TO THE PROJECT ENGINEER FOR EVALUATION.

LOOP DETECTOR LEADS SHALL BE IDENTIFIED WITH THEIR ASSOCIATED LOOP BY USE OF WATERPROOF TAGS AT BOTH ENDS OF THE CABLE. A LISTING OF THE CABLE IDENTIFICATION PER INDIVIDUAL LOOP LEAD-IN SHALL BE PLACED IN THE CABINET.

THE #12 AWG. LOOP WIRE IN THE PULL (SPLICE) BOX SHALL BE HAND TWISTED AT LEAST 3 TWISTS PER FOOT BEFORE BEING SPLICED TO THE LOOP LEAD-IN CABLE.

SPLICES OF LOOP WIRE TO LEAD-IN CABLE SHALL BE MADE ONLY IN PULL (SPLICE) BOXES AT THE SIDE OF THE ROAD.

THE #12 AWG LOOP WIRE SHALL BE INSTALLED FROM THE ROADSIDE PULL (SPLICE) BOX, THROUGH THE LOOP CONDUIT, BACK TO THE ROADSIDE PULL (SPLICE) BOX, AND BE INSTALLED IN ONE, NON-SPLICED CONTINUOUS LENGTH.

PROTECTION OF THE CONDUITS IN THE BASE COURSE SHALL BE REQUIRED AFTER INSTALLATION AND BEFORE NEW PAVEMENT IS INSTALLED.

SHOULD INSTALLATION REPAIR BE REQUIRED, IT SHALL BE DONE UNDER THE DIRECTION OF THE PROJECT ENGINEER.

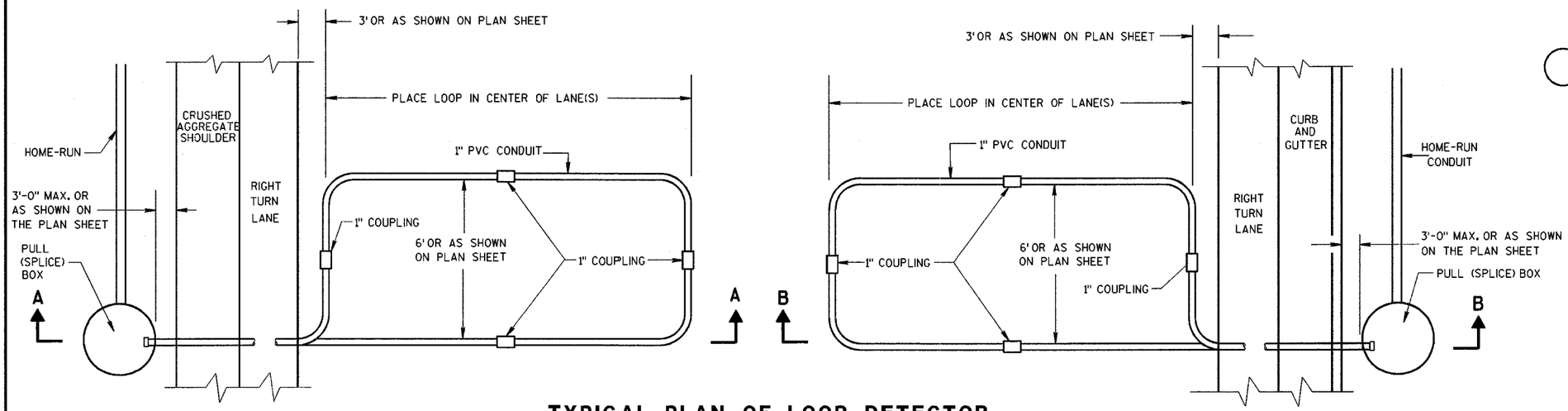

TYPICAL PLAN OF LOOP DETECTOR WITH 24" PULL (SPLICE) BOX

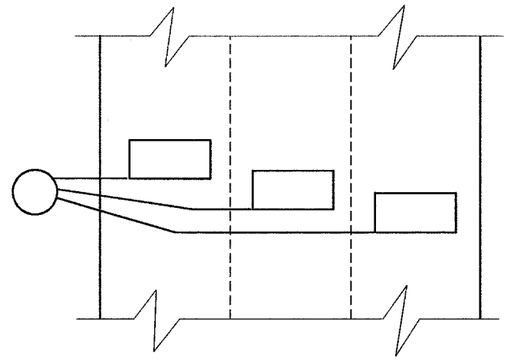

MULTI-LANE INSTLLATION

LOOP DETECTOR INSTALLED IN BASE COURSE WITH PULL (SPLICE) BOX OFF ROADWAY (OPTION 2)

STATE OF WISCONSIN
DEPARTMENT OF TRANSPORTATION

APPROVED 6/11/01
DATE
FHWA

STATE ELECTRICAL ENGINEER FOR HIGHWAYS

S.D.D. 9 F 15-1b

S.D.D. 9 F 15-1b

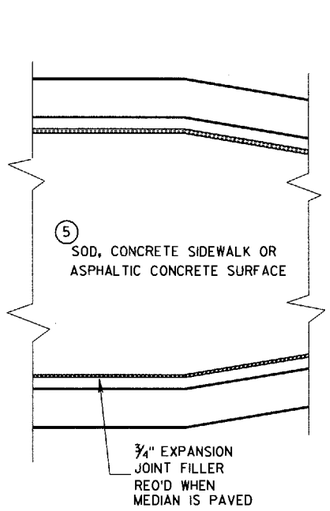

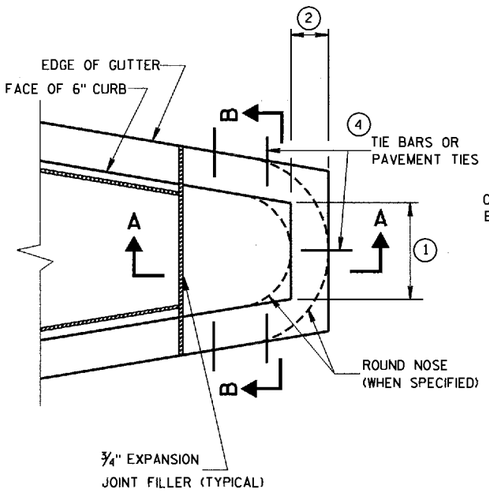

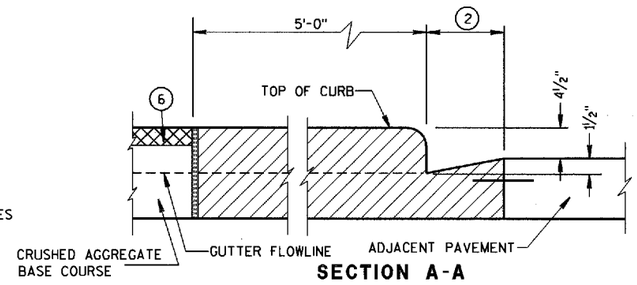

SECTION A-A

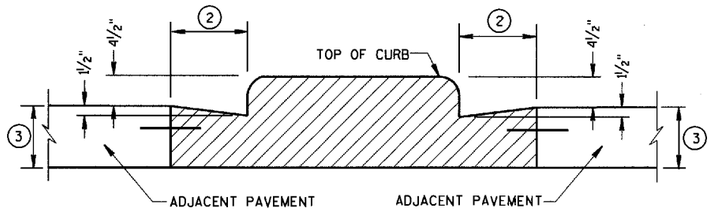

SECTION B-B

GENERAL NOTES

DETAILS OF CONSTRUCTION, MATERIALS AND WORKMANSHIP NOT SHOWN ON THIS DRAWING SHALL CONFORM TO THE PERTINENT REQUIREMENTS OF THE STANDARD SPECIFICATIONS AND THE APPLICABLE SPECIAL PROVISIONS.

(1) SEE PLAN FOR MEDIAN NOSE WIDTH AND RADIUS (FOR ROUND NOSE ALTERNATE).

(2) WIDTH OF GUTTER TO MATCH EXISTING ADJACENT GUTTER OR AS SPECIFIED ELSEWHERE IN THE PLAN.

(3) DEPTH EQUAL TO ADJACENT PAVEMENT. ADJACENT PAVEMENT STRUCTURE DETAILS ARE SHOWN ON THE PLAN. TYPICAL OPTIONS ARE:

(1) NEW OR EXISTING CONCRETE PAVEMENT.

(2) ASPHALTIC CONCRETE PAVEMENT OVER NEW OR EXISTING CONCRETE BASE COURSE.

(3) ASPHALTIC CONCRETE PAVEMENT OVER CRUSHED AGGREGATE BASE COURSE.

(4) TIE BARS OR PAVEMENT TIES REQUIRED IN NEW CONCRETE PAVEMENT OR CONCRETE BASE COURSE. TIE BARS SHALL BE NO. 4 X 2'-0" SPACED AT 2'-0" C-C.

PAVEMENT TIES REQUIRED IN EXISTING CONCRETE BASE COURSE. PAVEMENT TIES SHALL BE NO. 6 X 1'-0" SPACED AT 3'-0" C-C INSTALLED ON A HORIZONTAL SKEW OF 6:1. THE DIRECTION OF SKEW SHALL ALTERNATE AFTER EVERY ONE OR TWO BARS.

(5) SURFACE TYPE AND DETAILS ARE SHOWN ELSEWHERE IN THE PLAN.

CONCRETE MEDIAN BLUNT NOSE DETAIL

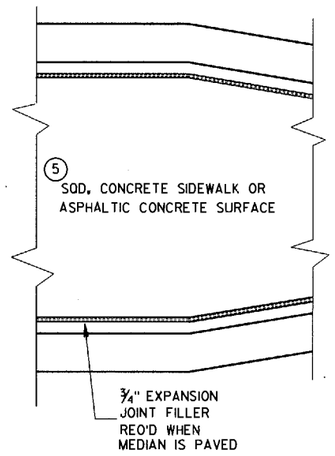

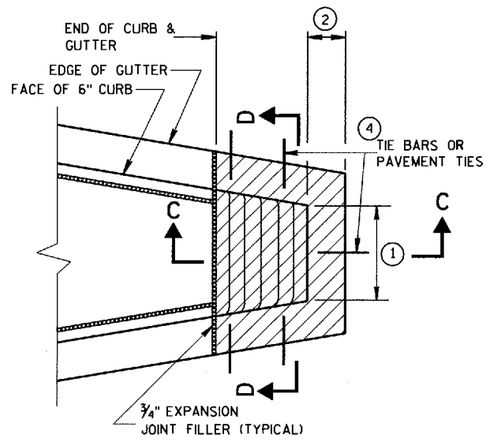

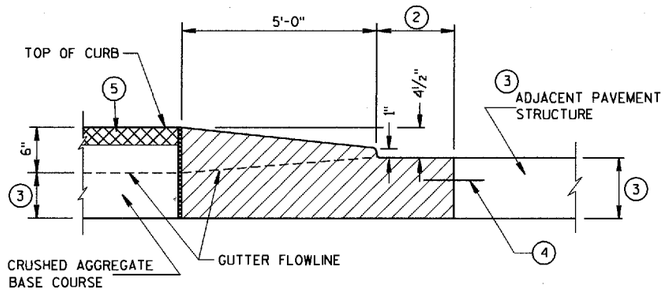

SECTION C-C

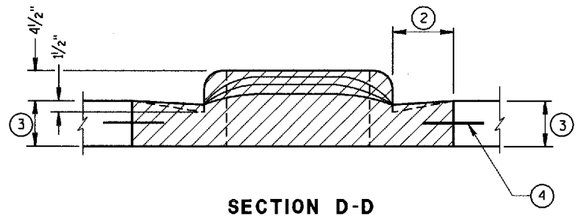

SECTION D-D

CONCRETE MEDIAN SLOPED NOSE DETAIL

CONCRETE MEDIAN NOSE

STATE OF WISCONSIN
DEPARTMENT OF TRANSPORTATION

APPROVED
07/30/96
DATE

Roy L. Thoresen
CHIEF ROADWAY DEVELOPMENT ENGINEER

FHWA

S.D.D. 11 B 2-1

S.D.D. 11 B 2-1

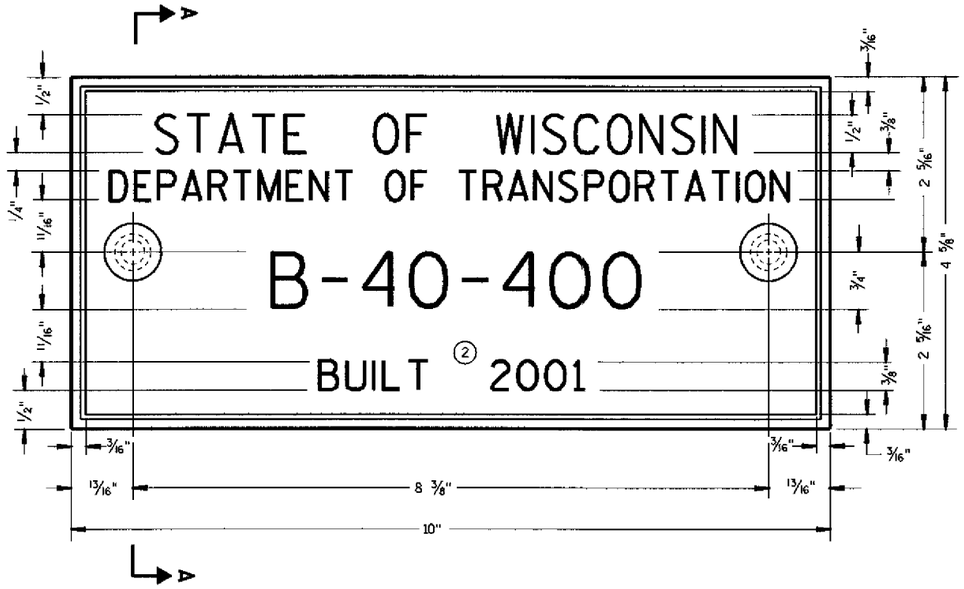

TYPICAL NAME PLATE
(BRIDGES, CULVERTS, AND RETAINING WALLS)

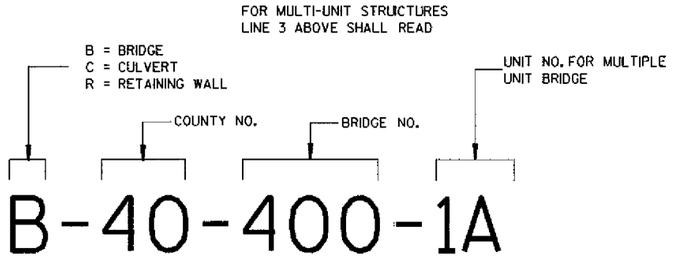

NUMBERING DESIGNATION
MULTI-UNIT STRUCTURES

GENERAL NOTES

NAME PLATES TO BE INSTALLED ON BRIDGES, CULVERTS, AND RETAINING WALLS SHALL CONFORM TO THE REQUIREMENTS OF SECTION 506.2.4 OF THE STANDARD SPECIFICATIONS.

THE BRIDGE NUMBER AND YEAR BUILT SHOWN ON THIS DRAWING ARE EXAMPLES ONLY. SEE CONSTRUCTION PLANS FOR INDIVIDUAL NUMBERING AND YEAR BUILT.

(1) EPOXY RESIN SHALL BE FROM AN APPROVED MANUFACTURER AND USED IN ACCORDANCE WITH MANUFACTURER'S RECOMMENDATIONS.

(2) REHABILITATION OF AN EXISTING STRUCTURE SHOULD USE THE DATE OF ORIGINAL STRUCTURE CONSTRUCTION.

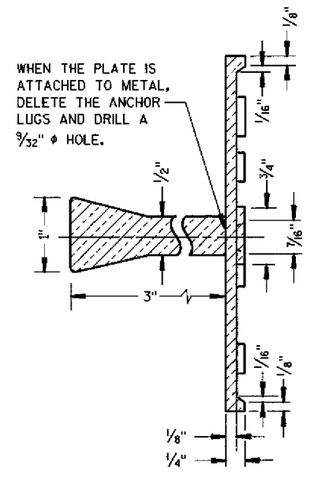

SECTION A-A

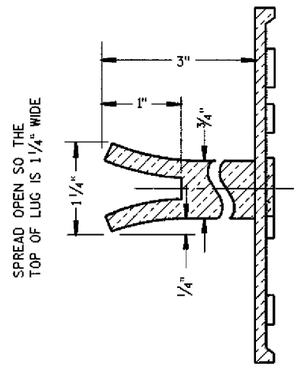

ALTERNATE LUG

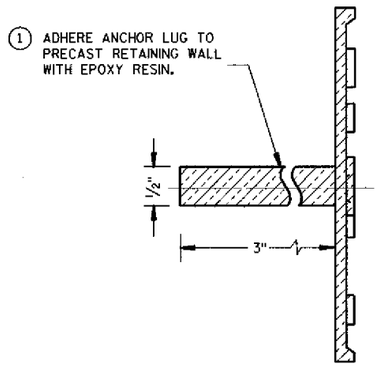

ALTERNATE LUG
(FOR ATTACHMENT TO PRECAST STRUCTURES)

NAME PLATE
(STRUCTURES)

STATE OF WISCONSIN
DEPARTMENT OF TRANSPORTATION

APPROVED
11/29/00 — DATE
S. A. Woods — CHIEF STRUCTURAL DEVELOPMENT ENGINEER
FHWA

S.D.D. 12 A 3-7

S.D.D. 12 A 3-7

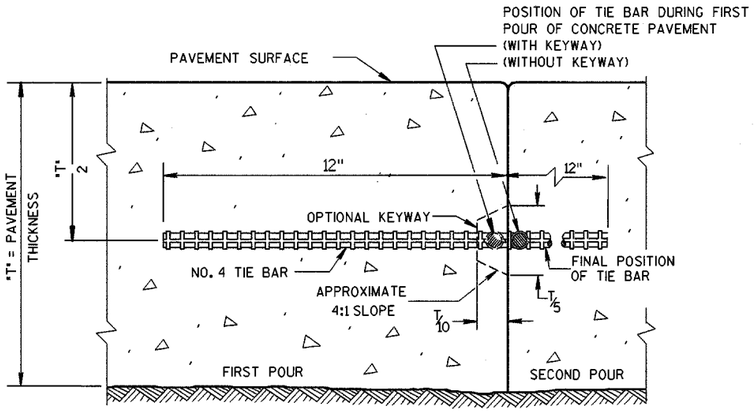

CONSTRUCTION JOINT

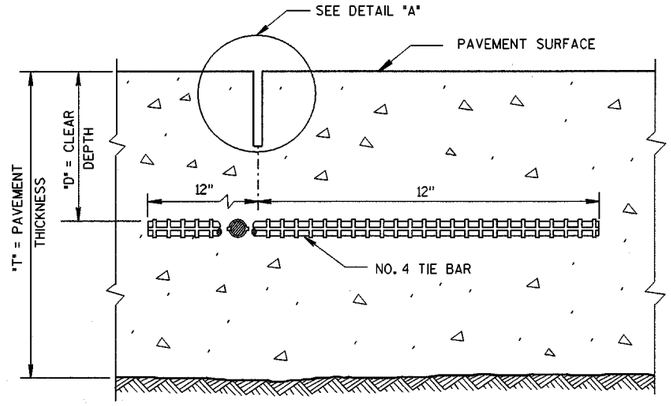

SAWED JOINT

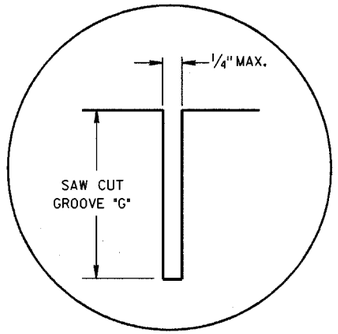

DETAIL "A"

GENERAL NOTES

DETAILS OF CONSTRUCTION NOT SHOWN ON THIS DRAWING SHALL CONFORM TO THE PERTINENT REQUIREMENTS OF THE STANDARD SPECIFICATIONS AND THE APPLICABLE SPECIAL PROVISIONS.

LONGITUDINAL JOINTS SHALL NOT BE SEALED OR FILLED.

TIE BAR SPACINGS ARE VALID ONLY FOR PAVEMENT WIDTHS IN THE TABLE. FOR WIDER PAVEMENTS, TIED CONCRETE SHOULDERS OR RAMPS, THE TIE BAR SPACING SHALL BE AS SHOWN ON THE PLANS.

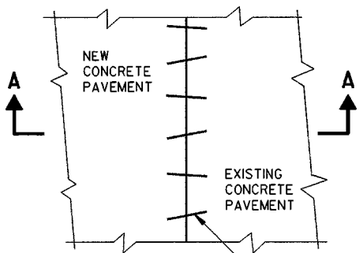

PLAN VIEW

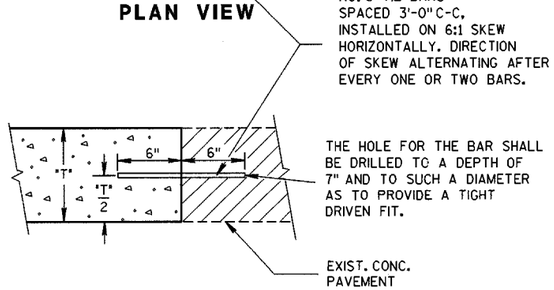

SECTION A-A
PAVEMENT TIES

PAVEMENT THICKNESS "T"	CLEAR DEPTH "D"	SAW CUT GROOVE "G"	MAXIMUM TIE BAR SPACING "S"	
			PAVEMENT WIDTH	
			24' OR 26'	30'
6, 6 1/2"	3"±1/2"	2"	48"	42"
7, 7 1/2"	3 1/4"±1"	2 1/4"	45"	36"
8, 8 1/2"	3 3/4"±1"	2 1/2"	39"	30"
9, 9 1/2"	4 1/4"±1"	3"	33"	27"
10, 10 1/2"	4 3/4"±1"	3 1/4"	30"	24"
11, 11 1/2"	5 1/4"±1"	3 3/4"	27"	21"
12"	5 3/4"±1"	4	24"	21"

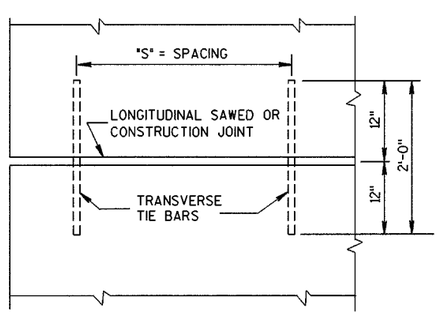

PLAN VIEW
SHOWING LOCATION OF TIE BARS

CONCRETE PAVEMENT LONGITUDINAL JOINTS AND PAVEMENT TIES

STATE OF WISCONSIN
DEPARTMENT OF TRANSPORTATION

APPROVED
6/6/02 DATE
Bill Ducket PAVEMENT ENGINEER
FHWA

S.D.D. 13 C 1-11

S.D.D. 13 C 1-11

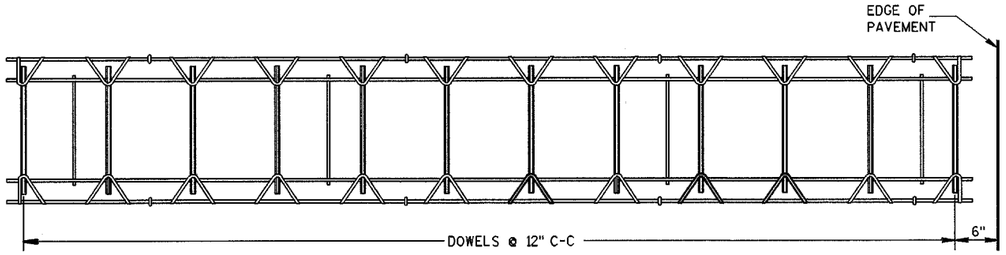

PLAN VIEW

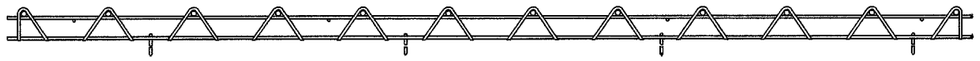

SIDE VIEW

CONTRACTION JOINT DOWEL ASSEMBLY ①

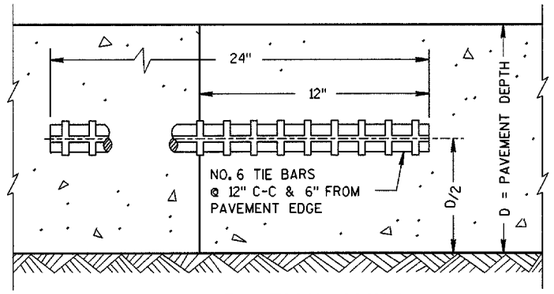

CONSTRUCTION JOINT

PAVEMENT DEPTH, DOWEL BAR SIZE AND JOINT SPACING TABLE

PAVEMENT DEPTH (D)	DOWEL BAR DIAMETER	CONTRACTION JOINT SPACING
6",6 1/2"	1 1/4"	12'
7",7 1/2"	1 1/4"	14'
8",8 1/2"	1 1/4"	15'
9",9 1/2"	1 1/4"	15'
10" & ABOVE	1 1/2"	18'

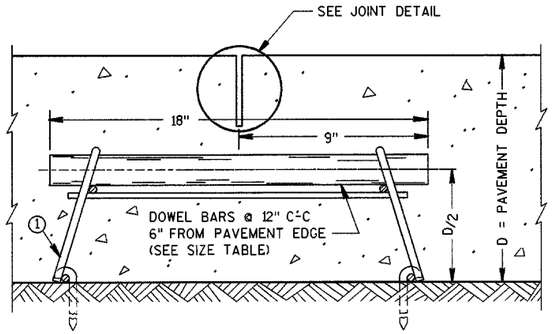

DOWELED CONTRACTION JOINT

GENERAL NOTES

DETAILS OF CONSTRUCTION NOT SHOWN ON THIS DRAWING SHALL CONFORM TO THE STANDARD SPECIFICATIONS AND SPECIAL PROVISIONS.

CONTRACTION JOINTS

CONTRACTION JOINTS SHALL BE NORMAL TO THE CENTERLINE. THE LOCATION OF CONTRACTION JOINTS THROUGH INTERSECTIONS SHALL BE SHOWN ON THE PLANS OR AS DIRECTED BY THE ENGINEER.

CONTRACTION JOINTS SHALL NOT BE SEALED OR FILLED.

DOWEL BARS SHALL BE INSTALLED PARALLEL TO THE PAVEMENT CENTERLINE AND SURFACE.

CONSTRUCTION JOINTS

CONSTRUCTION JOINTS SHALL BE A MINIMUM OF 4 FEET FROM THE NEAREST CONTRACTION JOINT AND ALIGNED EITHER PARALLEL TO CONTRACTION JOINTS OR AT 90° TO THE CENTERLINE.

TIE BARS MAY BE INSERTED THROUGH THE HEADER BOARD AFTER THE CONCRETE HAS BEEN PLACED.

① ALTERNATIVE DESIGNS OF THE DOWEL ASSEMBLY MAY BE USED WHEN APPROVED BY THE ENGINEER. MECHANICAL DOWEL BAR IMPLANTERS MAY BE USED INSTEAD OF DOWEL ASSEMBLIES.

② DOWEL BARS SHALL BE ANCHORED INTO DRILL HOLES WITH AN APPROVED EPOXY GROUT.

③ THE FREE END OF DOWEL BARS SHALL RECEIVE A THIN UNIFORM COATING OF BOND BREAKING GREASE.

④ DOWEL BARS INSTALLED BY DRILLING SHALL BE SPACED 1'-3" ON CENTER. THE GROUPING OF DOWEL BARS SHALL BE CENTERED INSIDE THE SLAB BASED ON ALL THE FOLLOWING SITUATIONS:

BETWEEN THE EDGES OF PAVEMENTS WITHOUT LONGITUDINAL JOINTS OR BETWEEN THE EDGE OF PAVEMENT AND NEAREST LONGITUDINAL JOINT OR BETWEEN TWO ADJACENT LONGITUDINAL JOINTS.

THE CLEAR DISTANCE FROM THE EDGE OF PAVEMENT OR LONGITUDINAL JOINT TO THE NEAR EDGE OF DOWEL BAR NEAREST THAT EDGE OR JOINT SHALL BE A MINIMUM OF 6 INCHES AND A MAXIMUM OF 14 INCHES.

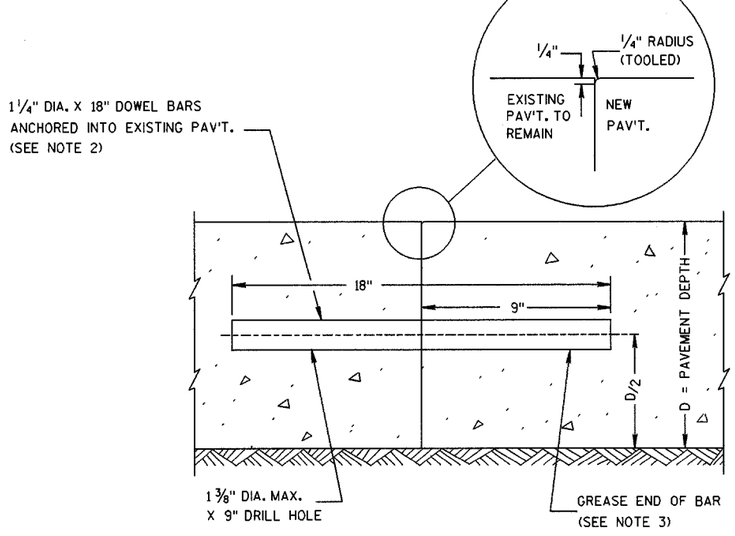

TRANSVERSE CONTRACTION JOINTS ABUTTING EXISTING PAVEMENT

④ DOWEL BAR DETAIL

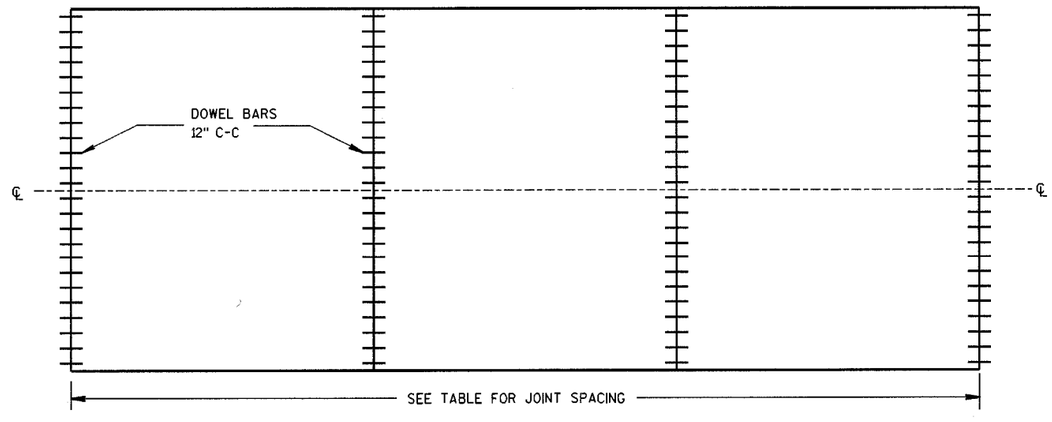

CONTRACTION JOINT LOCATIONS

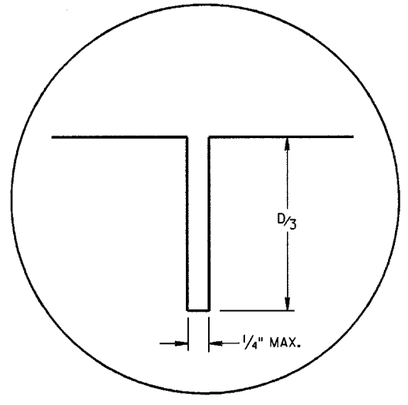

JOINT DETAIL

URBAN DOWELED CONCRETE PAVEMENT

STATE OF WISCONSIN
DEPARTMENT OF TRANSPORTATION

APPROVED
6/6/02 DATE
Bill Ducket PAVEMENT ENGINEER
FHWA

S.D.D. 13 C 13-4

S.D.D. 13 C 13-4

TWO-LANE ROADWAY

SYMBOLS

WORK AREA

FLAGGER, EQUIPPED WITH STOP/SLOW PADDLE FASTENED ON SUPPORT STAFF

SIGN ON PORTABLE OR PERMANENT SUPPORT

W20-7b

USE OF THE "BE PREPARED TO STOP" SIGN IS OPTIONAL. WHEN USED, THIS SIGN SHALL BE LOCATED BETWEEN THE W20-7a AND W20-4 SIGNS. A 500' TYPICAL SPACING SHALL BE PROVIDED BETWEEN THE SIGNS.

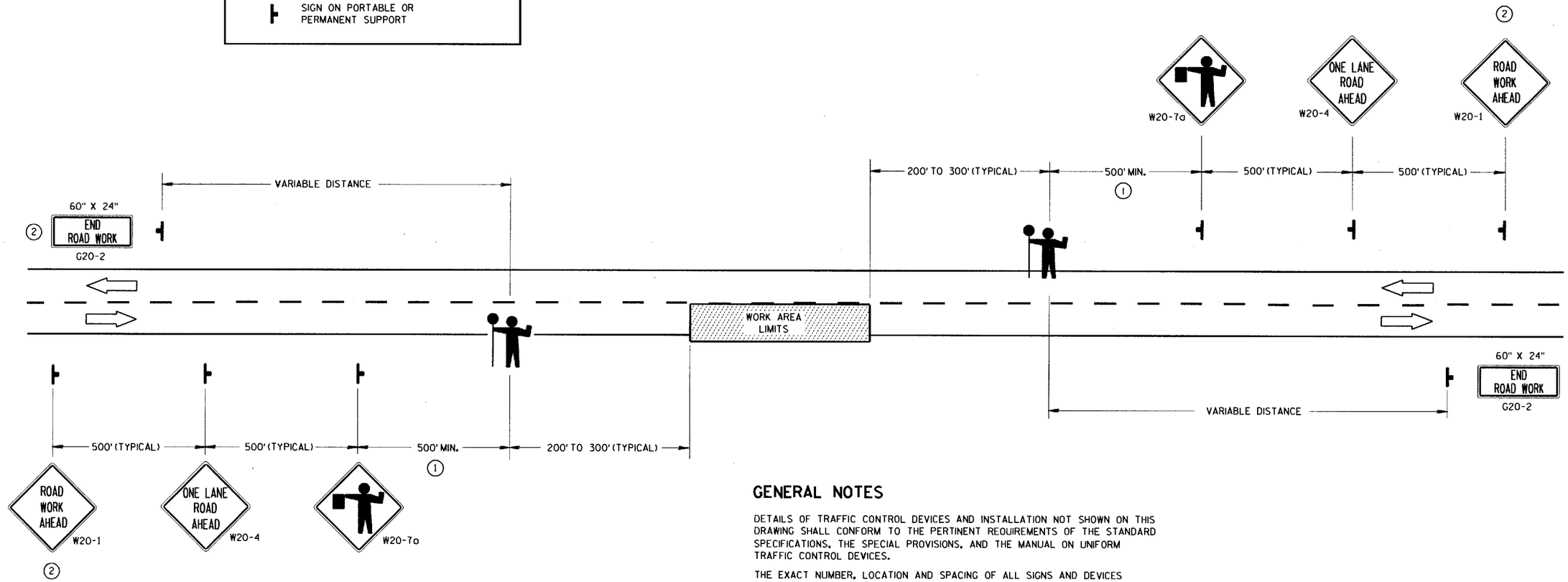

① FOR A MOVING WORK OPERATION,
SIGNING FOR BOTH DIRECTIONS SHALL BE REESTABLISHED (AS SIMULTANEOUSLY AS PRACTICAL) AT APPROXIMATELY 3500 FOOT INTERVALS IN THE MOVING WORK OPERATION OR AS DIRECTED BY THE ENGINEER.

② SIGN NOT REQUIRED IF FLAGGING OPERATION OCCURS WITHIN A SIGNED ROAD WORK ZONE AREA.

GENERAL NOTES

DETAILS OF TRAFFIC CONTROL DEVICES AND INSTALLATION NOT SHOWN ON THIS DRAWING SHALL CONFORM TO THE PERTINENT REQUIREMENTS OF THE STANDARD SPECIFICATIONS, THE SPECIAL PROVISIONS, AND THE MANUAL ON UNIFORM TRAFFIC CONTROL DEVICES.

THE EXACT NUMBER, LOCATION AND SPACING OF ALL SIGNS AND DEVICES (AND THE LOCATION OF ALL FLAGGERS) SHALL BE ADJUSTED TO FIT FIELD CONDITIONS AS DIRECTED BY THE ENGINEER.

THE FIRST ADVANCE WARNING SIGN SHOULD TYPICALLY BE LOCATED IN ADVANCE OF THE ANTICIPATED TRAFFIC BACKUP OR QUEUE.

WHEN A SIDE ROAD OR RAMP INTERSECTS THE FACILITY ON WHICH THE WORK IS BEING PERFORMED, ADDITIONAL TRAFFIC CONTROLS SHALL BE PROVIDED AS SPECIFIED IN THE PLANS AND/OR THE SPECIAL PROVISIONS OR AS DIRECTED BY THE ENGINEER.

FLAGGERS SHALL BE IN SIGHT OF EACH OTHER OR IN DIRECT COMMUNICATION AT ALL TIMES. THEY SHALL BE EQUIPPED WITH STOP/SLOW PADDLES FASTENED ON SUPPORT STAFFS. WHEN THE FLAGGING OPERATION IS NOT IN EFFECT, THE "FLAGGER AHEAD", THE "ROAD WORK AHEAD" AND THE ONE LANE ROAD AHEAD" SIGNS SHALL BE COVERED OR REMOVED AND THE HIGHWAY RESTORED TO NORMAL OPERATION.

ALL SIGNS ARE 48" X 48" UNLESS OTHERWISE NOTED.

TRAFFIC CONTROL FOR LANE CLOSURE (SUITABLE FOR MOVING OPERATIONS)

STATE OF WISCONSIN
DEPARTMENT OF TRANSPORTATION

APPROVED
2/17/94
DATE

STATE TRAFFIC ENGINEER FOR HWYS

FHWA

S.D.D. 15 C 12-2

S.D.D. 15 C 12-2

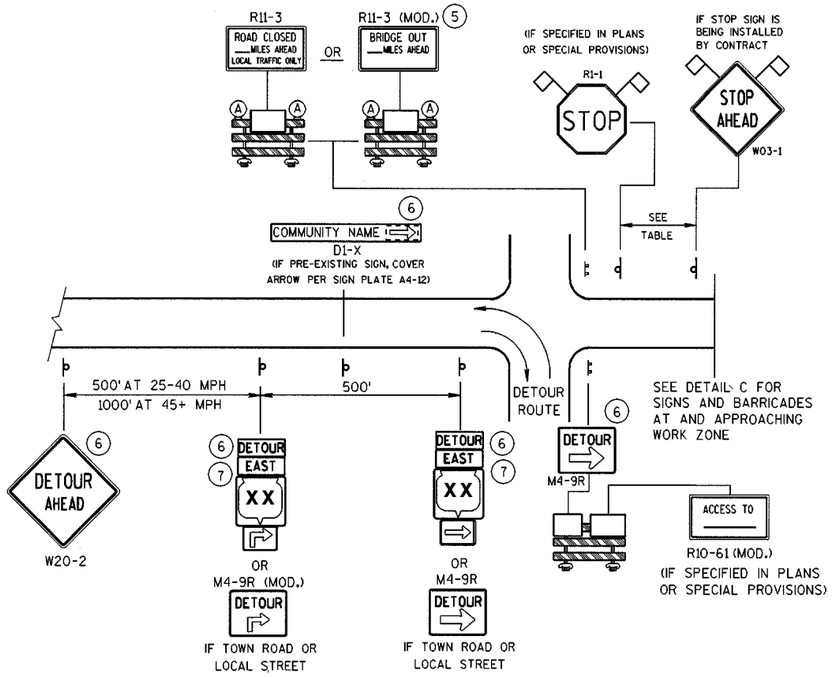

DETAIL A

MAINLINE CLOSURE WITH POSTED DETOUR

WORK ZONE GREATER THAN ½ MILE FROM DETOUR ROUTE (1000 FEET IF URBAN)

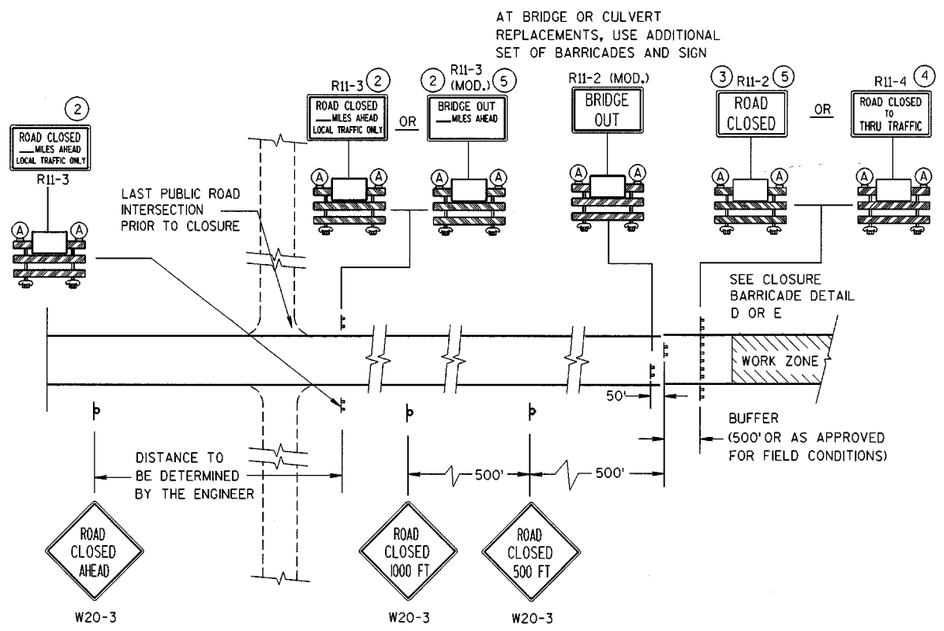

DETAIL C

MAINLINE CLOSURE, NO POSTED DETOUR

SPEED LIMIT (MPH)	"STOP AHEAD" ADVANCE WARNING DISTANCE (FT)
25	200
30	200
35	350
40	350
45	500
50	550
55	750

SEE SDD 15C2-4b
FOR GENERAL NOTES
AND FOOTNOTES (1) THROUGH (7)

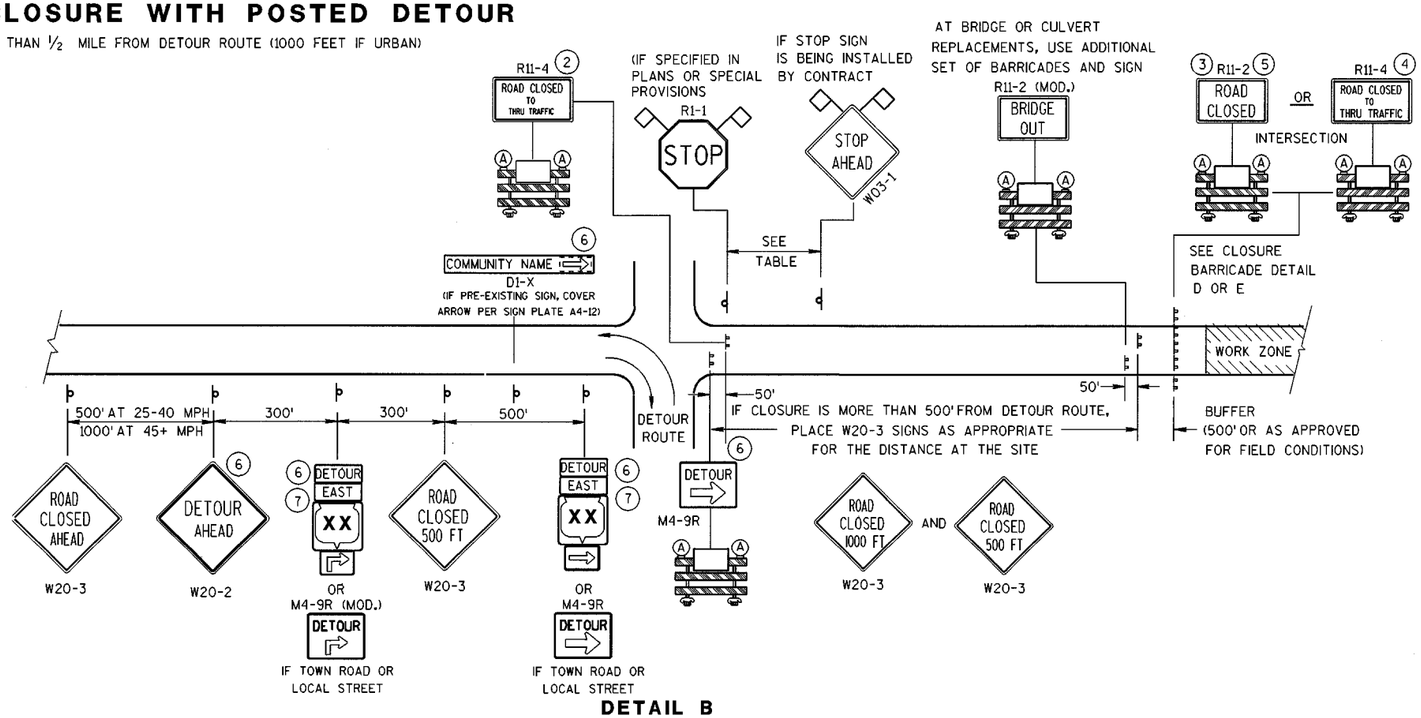

DETAIL B

MAINLINE CLOSURE WITH POSTED DETOUR

WORK ZONE LESS THAN ½ MILE FROM DETOUR ROUTE (1000 FEET IF URBAN)

LEGEND

- POST MOUNTED SIGN
- TYPE III BARRICADES
- (A) TYPE "A" LOW INTENSITY FLASHING WARNING LIGHT (FOR NIGHT USE)
- WORK ZONE
- DETOUR / EAST — M4-8 / M3-X
- XX — M1-4; COUNTY XX — M1-5A; XX — M1-6
- M05-1; M06-1
- FLAGS, 16" X 16" MIN., (ORANGE)

BARRICADES AND SIGNS
FOR
MAINLINE CLOSURES

STATE OF WISCONSIN
DEPARTMENT OF TRANSPORTATION

6

S.D.D. 15 C 2-4a

S.D.D. 15 C 2-4a

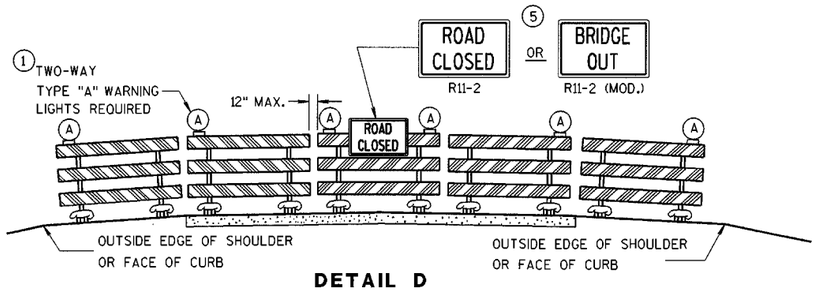

DETAIL D

ROAD CLOSURE BARRICADE DETAIL

APPROACH VIEW

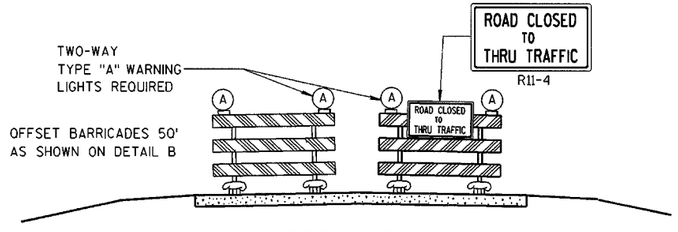

DETAIL E

LANE CLOSURE BARRICADE DETAIL

APPROACH VIEW

SEE SDD 15C2-4a FOR LEGEND

GENERAL NOTES

THE EXACT NUMBER, LOCATION, AND SPACING OF ALL SIGNS AND BARRICADES SHALL BE ADJUSTED TO FIT FIELD CONDITIONS AS APPROVED BY THE ENGINEER.

ANY SIGNS TEMPORARY OR EXISTING, WHICH CONFLICT WITH TRAFFIC CONTROL "IN USE" SHALL BE REMOVED OR COVERED AS NEEDED AND AS APPROVED BY THE ENGINEER.

THE SPACING BETWEEN TRAFFIC CONTROL SIGNS SHOULD BE ADJUSTED TO NOT CONFLICT WITH AND SHOULD PROVIDE A DESIRABLE MINIMUM OF 200 FEET CLEARANCE TO EXISTING SIGNS THAT WILL REMAIN IN PLACE.

BARRICADES THAT MUST BE MOVED FOR A WORK OPERATION SHALL BE IMMEDIATELY RE-ESTABLISHED UPON COMPLETION OF THE OPERATION OR, FOR CONTINUING OPERATIONS, AT THE END OF EACH WORKING DAY.

SIGNS THAT WILL BE IN PLACE LESS THAN 7 CONTINUOUS DAYS AND NIGHTS MAY BE MOUNTED ON PORTABLE SUPPORTS.

ALL TYPE III BARRICADES SHALL HAVE RAILS REFLECTORIZED ON BOTH FACES. STRIPES SHALL BE PROPERLY SLOPED DOWN TOWARD THE TRAFFIC SIDE OR AS SHOWN IN THE ROAD CLOSURE BARRICADE DETAIL D FOR FULL ROAD CLOSURES.

TYPE "A" LOW-INTENSITY FLASHING WARNING LIGHTS SHALL BE VISIBLE ON BOTH SIDES OF THE BARRICADE.

THE R11-2, R11-3, M4-9, R11-4 AND R10-61 SIGNS PLACED ON BARRICADES SHALL COVER NO MORE THAN THE TOP RAIL. THE SIGNS SHALL NOT COVER ANY PORTION OF THE MIDDLE OR BOTTOM RAILS.

THE REFLECTIVE SHEETING USED ON R11-2, R11-3, R11-4, R10-61 AND R1-1 SIGNS SHALL COMPLY WITH SUBSECTION 637.2.2.2 OF THE STANDARD SPECIFICATIONS.

"WO AND "MO" SIGNS ARE THE SAME AS "W" AND "M" SIGNS EXCEPT THE BACKGROUND IS ORANGE.

ALL SIGNS SHALL BE 48" X 48" UNLESS OTHERWISE NOTED BELOW:
- R11-2 SHALL BE 48" X 30".
- R11-3, R11-4 AND R10-61 SHALL BE 60" X 30".
- M4-9 SHALL BE 30" X 24".
- M3-X AND M4-8 SHALL BE 24" X 12". (30" X 15" IF NEEDED TO MATCH EXISTING SIGNS.)
- M1-4, M1-5A, AND M1-6 SHALL BE 24" X 24". (36" X 36" IF NEEDED TO MATCH EXISTING SIGNS.)
- M05-1 AND M06-1 SHALL BE 21" X 21". (30" X 30" IF NEEDED TO MATCH EXISTING SIGNS.)
- D1-X SHALL BE AS SHOWN ON SPECIFIC PROJECT SIGNING DETAIL SHEETS.
- R1-1 SHALL BE 36" X 36".

(1) TWO WARNING LIGHTS SHALL BE PROVIDED ON THE CENTER BARRICADE AND A MINIMUM OF ONE WARNING LIGHT SHALL BE PROVIDED ON EACH OF THE OTHER BARRICADES WITHIN THE ROADWAY LIMITS. SPACING OF THE WARNING LIGHTS SHALL BE UNIFORM TO THE EDGE OF ROADWAY AS SHOWN (APPROX. 8-FOOT LIGHT SPACING).

(2) THESE SIGNS AND BARRICADES ARE NOT REQUIRED IF ROAD CLOSURE BEGINS AT INTERSECTION.

(3) FOR ROAD CLOSURE WITHOUT LOCAL ACCESS TO PROJECT, SEE ROAD CLOSURE BARRICADE DETAIL D.

(4) FOR ROAD CLOSURE WITH LOCAL ACCESS TO PROJECT, SEE LANE CLOSURE BARRICADE DETAIL E.

(5) FOR BRIDGE OR CULVERT REPLACEMENTS, SUBSTITUTE "BRIDGE OUT" INSTEAD OF "ROAD CLOSED" ON R11-2 AND R11-3 SIGNS.

(6) INSTALL DETOUR AND COMMUNITY GUIDE SIGNS AND ARROWS ONLY IF SPECIFIED IN THE CONTRACT. IF THERE ARE EXISTING ROUTE MARKER ASSEMBLIES THAT WILL REMAIN IN PLACE, ADJUST THE LOCATION OF THE DETOUR ROUTE SIGNS TO CORRESPOND WITH THE EXISTING ASSEMBLIES. MODIFY EXISTING SIGNS WHERE POSSIBLE. SEE SPECIFIC PROJECT DETOUR SIGNING DETAIL SHEETS. IF DETOUR SIGNS ARE BEING INSTALLED BY OTHERS, PLACE THE CONTRACTED TRAFFIC CONTROL SIGNS TO ALLOW FOR PLACEMENT OF ALL WARNING, DETOUR AND GUIDE SIGNS AS SHOWN.

(7) "EAST" CARDINAL DIRECTION MARKERS AND RIGHT TURN ARROWS ARE SHOWN. USE OTHER CARDINAL DIRECTIONS AND ARROWS AS APPROPRIATE.

6

BARRICADES AND SIGNS FOR MAINLINE CLOSURES

STATE OF WISCONSIN
DEPARTMENT OF TRANSPORTATION

APPROVED
9/16/03
DATE

Thomas N. Notbohm for
CHIEF SIGNS AND MARKING ENGINEER

FHWA

S.D.D. 15 C 2-4b

S.D.D. 15 C 2-4b

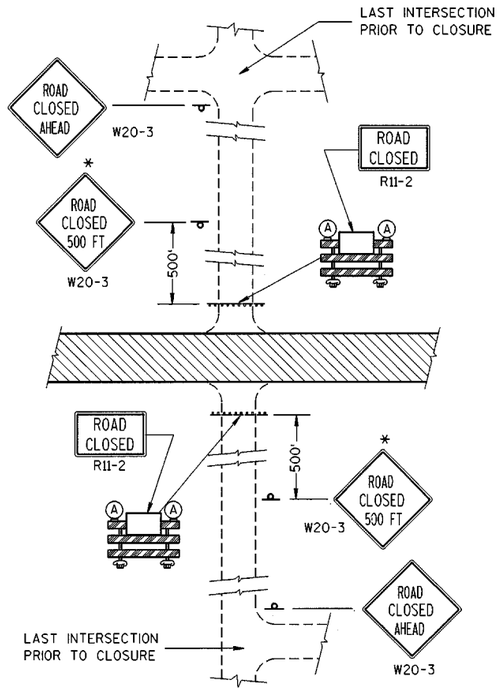

DETAIL 1

(NO ACCESS TO PROJECT)

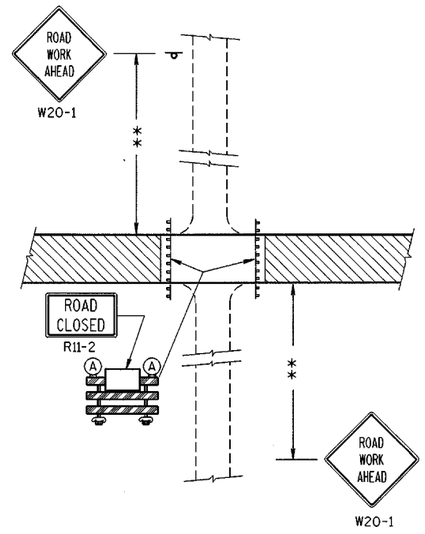

DETAIL 2

(PUBLIC CROSS-TRAFFIC MAINTAINED.
NO ACCESS TO PROJECT).

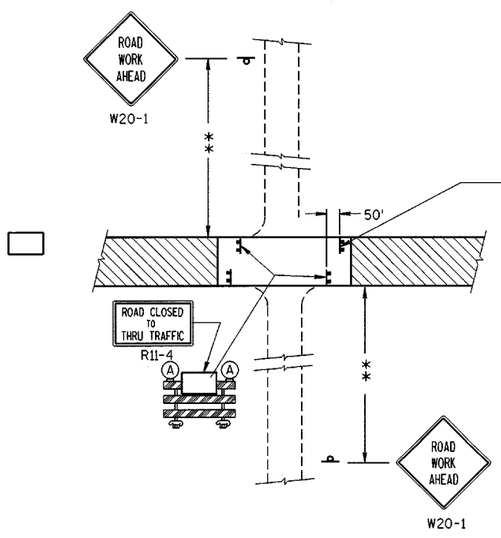

DETAIL 3

(PUBLIC CROSS-TRAFFIC MAINTAINED. CONTRACTOR,
LOCAL BUSINESS AND RESIDENT ACCESS).

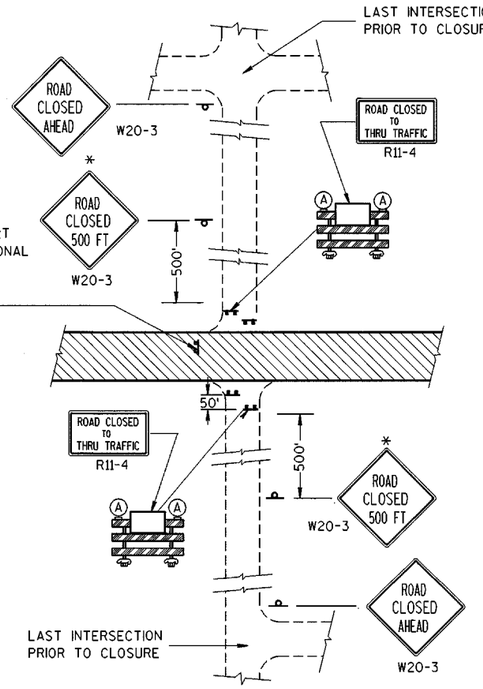

DETAIL 4

(CONTRACTOR, LOCAL BUSINESS AND
RESIDENT ACCESS TO PROJECT)

GENERAL NOTES

THE EXACT NUMBER, LOCATION, AND SPACING OF ALL SIGNS AND BARRICADES SHALL BE ADJUSTED TO FIT FIELD CONDITIONS AS APPROVED BY THE ENGINEER.

ANY SIGNS TEMPORARY OR EXISTING, WHICH CONFLICT WITH TRAFFIC CONTROL "IN USE" SHALL BE REMOVED OR COVERED AS NEEDED AND AS APPROVED BY THE ENGINEER.

THE SPACING BETWEEN TRAFFIC CONTROL SIGNS SHOULD BE ADJUSTED TO NOT CONFLICT WITH AND SHOULD PROVIDE A DESIRABLE MINIMUM OF 200 FEET CLEARANCE TO EXISTING SIGNS THAT WILL REMAIN IN PLACE.

IF A "STOP" SIGN MUST BE REMOVED FOR A WORK OPERATION, A TEMPORARY "STOP" SIGN SHALL BE PLACED PRIOR TO THE SIGN REMOVAL, OR A FLAGGER SHALL BE PROVIDED UNTIL THE SIGN IS RE-ESTABLISHED.

BARRICADES THAT MUST BE MOVED FOR A WORK OPERATION SHALL BE IMMEDIATELY RE-ESTABLISHED UPON COMPLETION OF THE OPERATION OR, FOR CONTINUING OPERATIONS, AT THE END OF EACH WORKING DAY.

SIGNS THAT WILL BE IN PLACE LESS THAN 7 CONTINUOUS DAYS AND NIGHTS MAY BE MOUNTED ON PORTABLE SUPPORTS.

ALL TYPE III BARRICADES SHALL HAVE RAILS REFLECTORIZED ON BOTH FACES. STRIPES SHALL BE PROPERLY SLOPED DOWN TOWARD THE TRAFFIC SIDE OR AS SHOWN IN THE ROAD CLOSURE BARRICADE DETAIL D FOR FULL ROAD CLOSURES.

TYPE "A" LOW-INTENSITY FLASHING WARNING LIGHTS SHALL BE VISIBLE ON BOTH SIDES OF THE BARRICADE.

THE R11-2, R11-3 AND R11-4 SIGNS PLACED ON BARRICADES SHALL COVER NO MORE THAN THE TOP RAIL. THE SIGNS SHALL NOT COVER ANY PORTION OF THE MIDDLE OR BOTTOM RAILS.

THE REFLECTIVE SHEETING USED ON R11-2, R11-3 AND R11-4 SIGNS SHALL COMPLY WITH SUBSECTION 637.2.2.2 OF THE STANDARD SPECIFICATIONS.

ALL SIGNS SHALL BE 48" X 48" UNLESS OTHERWISE NOTED BELOW:
R11-2 SHALL BE 48" X 30".
R11-4 AND R11-3 SHALL BE 60" X 30".

*OMIT THE "ROAD CLOSED 500 FT." SIGN IF THE LAST INTERSECTION IS 500 FT. OR LESS FROM THE WORK ZONE.

**500' MAX. OR AT LAST INTERSECTION WHICHEVER IS CLOSER.

LEGEND

- POST MOUNTED WARNING SIGN
- TYPE III BARRICADES
- (A) TYPE "A" LOW INTENSITY FLASHING WARNING LIGHT (FOR NIGHT USE)
- WORK AREA

6

BARRICADES AND SIGNS FOR SIDEROAD CLOSURES

STATE OF WISCONSIN
DEPARTMENT OF TRANSPORTATION

APPROVED

9/16/03
DATE

Thomas N. Notbohm for
CHIEF SIGNS AND MARKING ENGINEER

FHWA

S.D.D. 15 C 3-1

S.D.D. 15 C 3-1

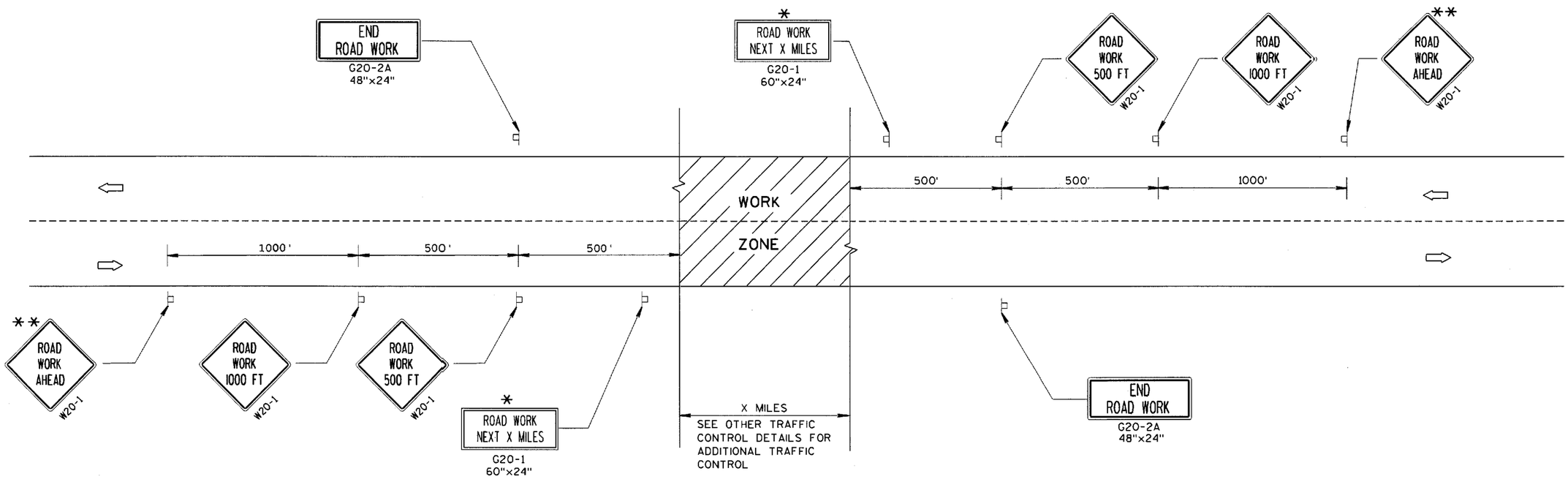

TYPICAL SIDEROAD APPROACH WARNING SIGN DETAIL

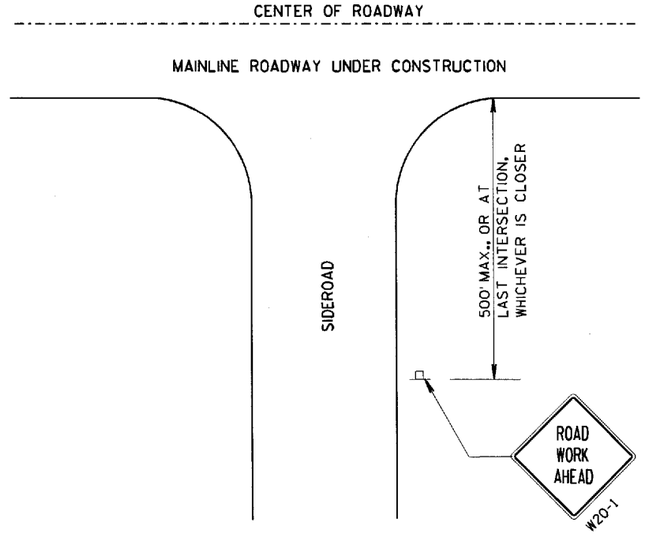

GENERAL NOTES

THE EXACT NUMBER, LOCATION, AND SPACING OF ALL SIGNS AND DEVICES SHALL BE ADJUSTED TO FIT FIELD CONDITIONS.

THE SPACING BETWEEN TRAFFIC CONTROL SIGNS SHOULD BE ADJUSTED TO NOT CONFLICT WITH AND SHOULD PROVIDE A MINIMUM OF 200 FEET (500 FEET DESIRABLE) CLEARANCE TO EXISTING SIGNS THAT WILL REMAIN IN PLACE.

ALL SIGNS ARE 48"x48" UNLESS OTHERWISE NOTED.

SIGNS THAT WILL BE IN PLACE LESS THAN 7 CONTINUOUS DAYS AND NIGHTS MAY BE MOUNTED ON PORTABLE SUPPORTS.

IF A "STOP" SIGN MUST BE REMOVED FOR A WORK OPERATION, A TEMPORARY "STOP" SIGN SHALL BE PLACED PRIOR TO THE SIGN REMOVAL, OR A FLAGGER SHALL BE PROVIDED UNTIL THE SIGN IS RE-ESTABLISHED.

* OMIT G20-1 SIGNS IF LENGTH OF WORK AREA IS 2 MILES OR LESS.

** PLACE ADDITIONAL W20-1 "ROAD WORK AHEAD" SIGN IF WORK AREA WITHIN THE PROJECT IS SEPARATED BY MORE THAN 2 MILES FROM PREVIOUS WORK AREA OR SIGNING.

LEGEND

POST MOUNTED SIGN

DIRECTION OF TRAFFIC FLOW

TRAFFIC CONTROL,
ADVANCE WARNING SIGNS
45 M.P.H. OR GREATER
TWO-WAY UNDIVIDED ROAD OPEN TO TRAFFIC

STATE OF WISCONSIN
DEPARTMENT OF TRANSPORTATION

APPROVED
5/23/00
DATE

Chester J. Spang
CHIEF SIGNS AND MARKING ENGINEER

FHWA

S.D.D. 15 C 4-1

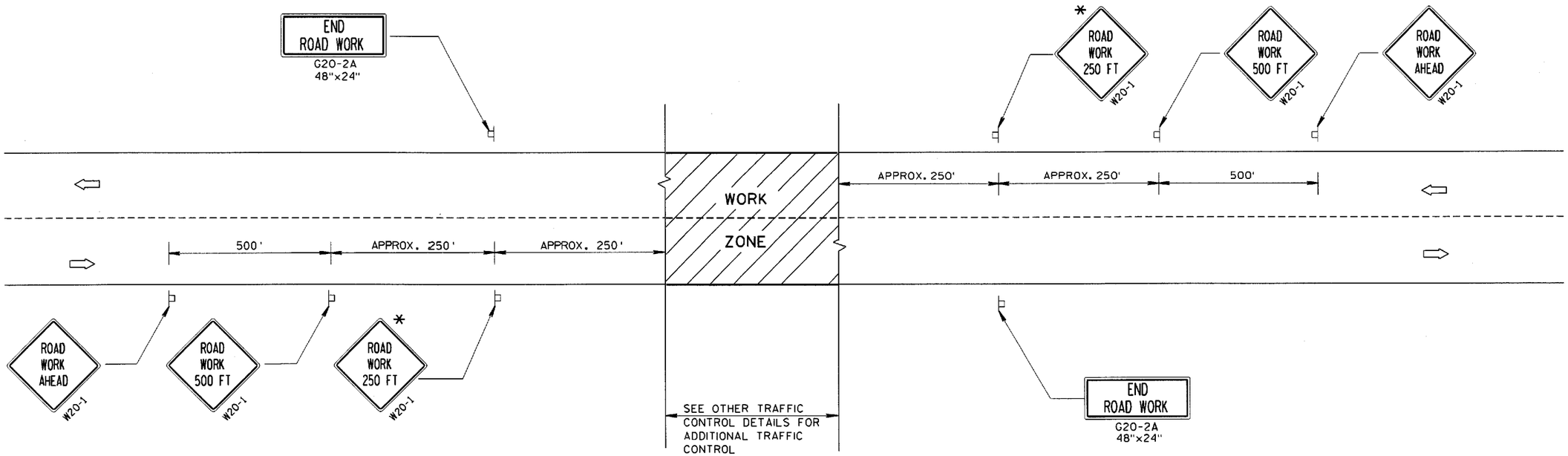

TYPICAL SIDEROAD APPROACH WARNING SIGN DETAIL

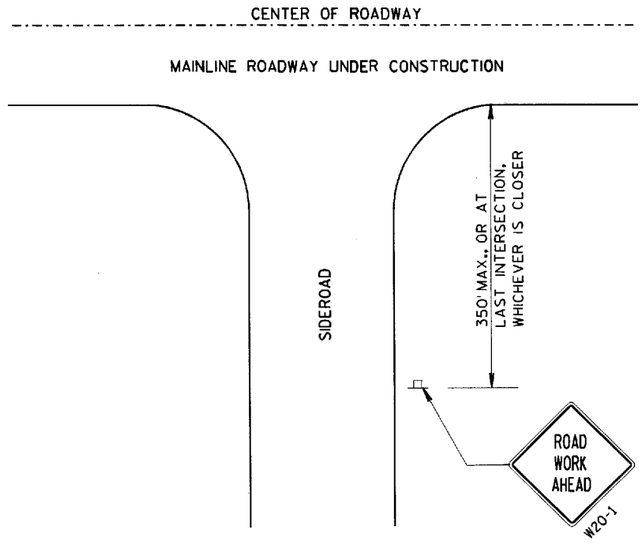

GENERAL NOTES

THE EXACT NUMBER, LOCATION, AND SPACING OF ALL SIGNS AND DEVICES SHALL BE ADJUSTED TO FIT FIELD CONDITIONS.

THE SPACING BETWEEN TRAFFIC CONTROL SIGNS SHOULD BE ADJUSTED TO NOT CONFLICT WITH AND SHOULD PROVIDE A DESIRABLE MINIMUM OF 200 FEET CLEARANCE TO EXISTING SIGNS THAT WILL REMAIN IN PLACE.

ALL SIGNS ARE 48"×48" UNLESS OTHERWISE NOTED. IF NECESSARY DUE TO SPACE CONSTRAINTS, 36"×36" SIGNS MAY BE USED INSTEAD OF 48"×48" SIGNS, IF APPROVED BY DISTRICT TRAFFIC UNIT.

SIGNS THAT WILL BE IN PLACE LESS THAN 7 CONTINUOUS DAYS AND NIGHTS MAY BE MOUNTED ON PORTABLE SUPPORTS.

IF A "STOP" SIGN MUST BE REMOVED FOR A WORK OPERATION, A TEMPORARY "STOP" SIGN SHALL BE PLACED PRIOR TO THE SIGN REMOVAL, OR A FLAGGER SHALL BE PROVIDED UNTIL THE SIGN IS RE-ESTABLISHED.

* THE THIRD W20-1 SIGN IS REQUIRED ONLY IF THERE IS AN INTERSECTION BETWEEN THE "ROAD WORK 500 FT" SIGN AND THE WORK ZONE. ADJUST THE PLACEMENT OF THIS SIGN BASED ON INTERSECTION LOCATION AND OTHER FIELD CONDITIONS.

LEGEND

- POST MOUNTED SIGN
- DIRECTION OF TRAFFIC FLOW

TRAFFIC CONTROL,
ADVANCE WARNING SIGNS
40 M.P.H. OR LESS
TWO-WAY UNDIVIDED ROAD OPEN TO TRAFFIC

STATE OF WISCONSIN
DEPARTMENT OF TRANSPORTATION

APPROVED
5/23/00 DATE
Chester J. Spong
CHIEF SIGNS AND MARKING ENGINEER
FHWA

S.D.D. 15 C 5-1

S.D.D. 15 C 5-1

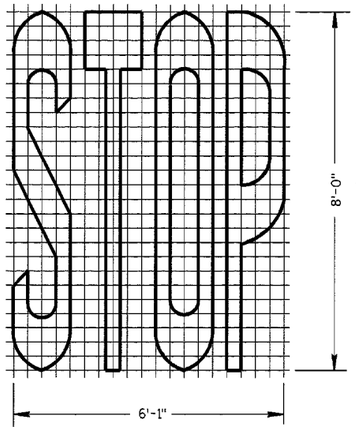

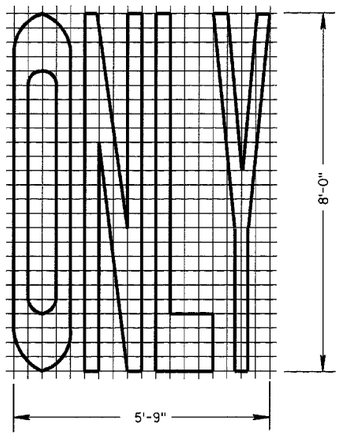

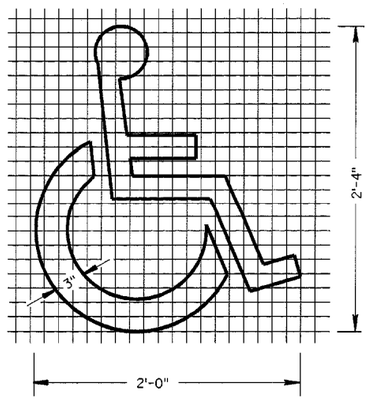

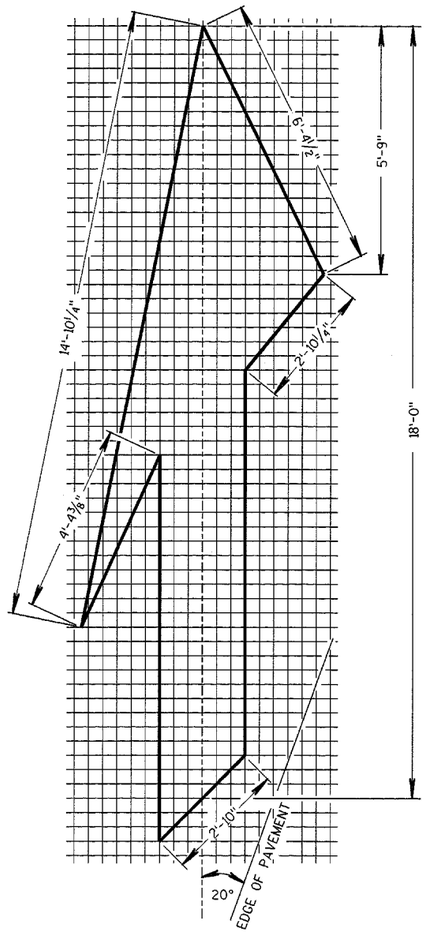

TYPE 5 LANE DROP ARROW

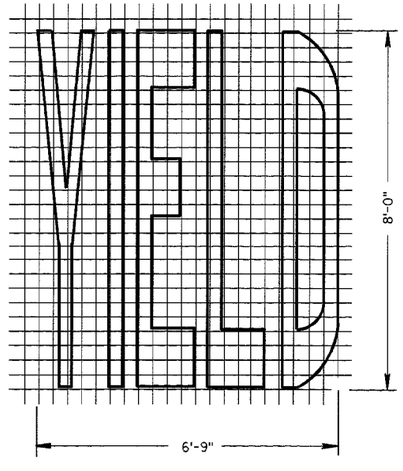

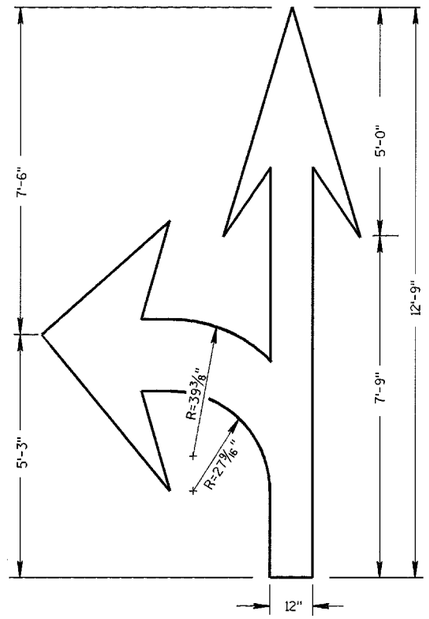

TYPE 3

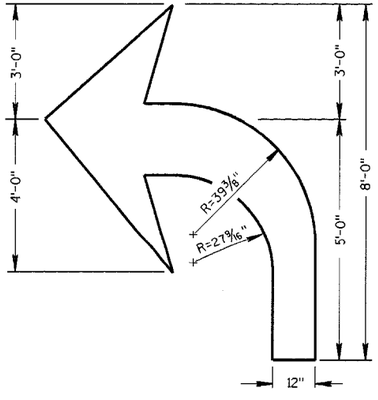

TYPE 2

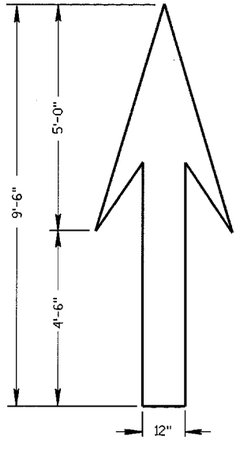

TYPE 1

GENERAL NOTES

DETAILS OF INSTALLATION, MATERIALS AND WORKMANSHIP NOT SHOWN ON THIS DRAWING SHALL CONFORM TO THE PERTINENT REQUIREMENTS OF THE STANDARD SPECIFICATIONS AND APPLICABLE SPECIAL PROVISIONS.

ALL LETTERS AND SYMBOLS SHALL BE IN CONFORMANCE WITH REQUIREMENTS INCLUDED IN "STANDARD ALPHABETS FOR HIGHWAY SIGNS AND PAVEMENT MARKING" BY THE FEDERAL HIGHWAY ADMINISTRATION. ALL LETTERS, ARROWS AND SYMBOLS SHALL BE WHITE AND REFLECTORIZED.

A DETAILED DRAWING OF THE HANDICAPPED PARKING SYMBOL IS ILLUSTRATED IN THE "STANDARD HIGHWAY SIGNS MANUAL" BY THE FEDERAL HIGHWAY ADMINISTRATION.

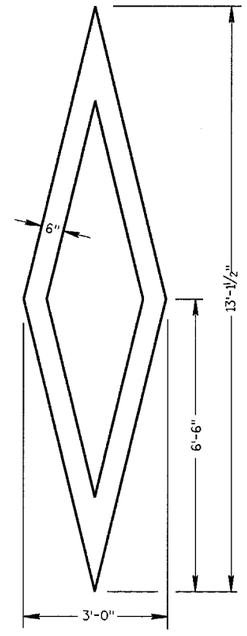

PREFERENTIAL LANE SYMBOL

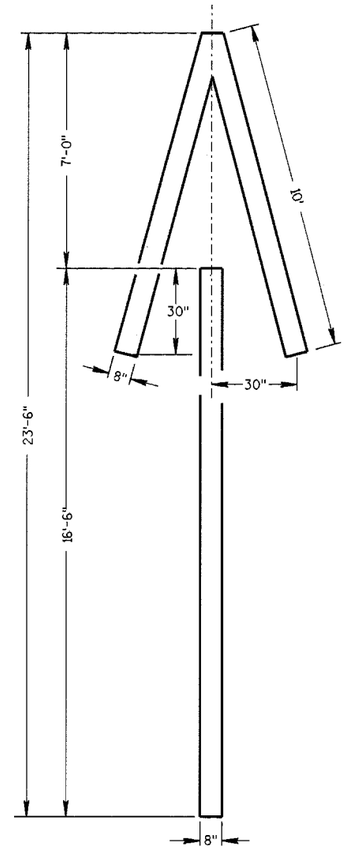

TYPE 4

6

PAVEMENT MARKING SYMBOLS

STATE OF WISCONSIN
DEPARTMENT OF TRANSPORTATION

APPROVED
3-18-03 DATE
Deborah D. Kyrl for CHIEF SIGNS AND MARKING ENGINEER
FHWA

S.D.D. 15 C 7-6a

S.D.D. 15 C 7-6a

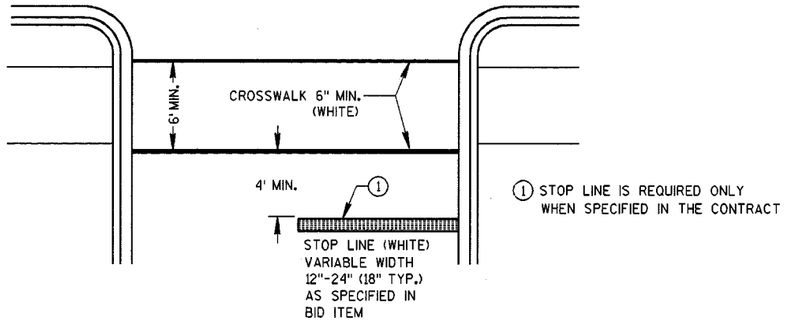

STOP LINE AND CROSSWALK

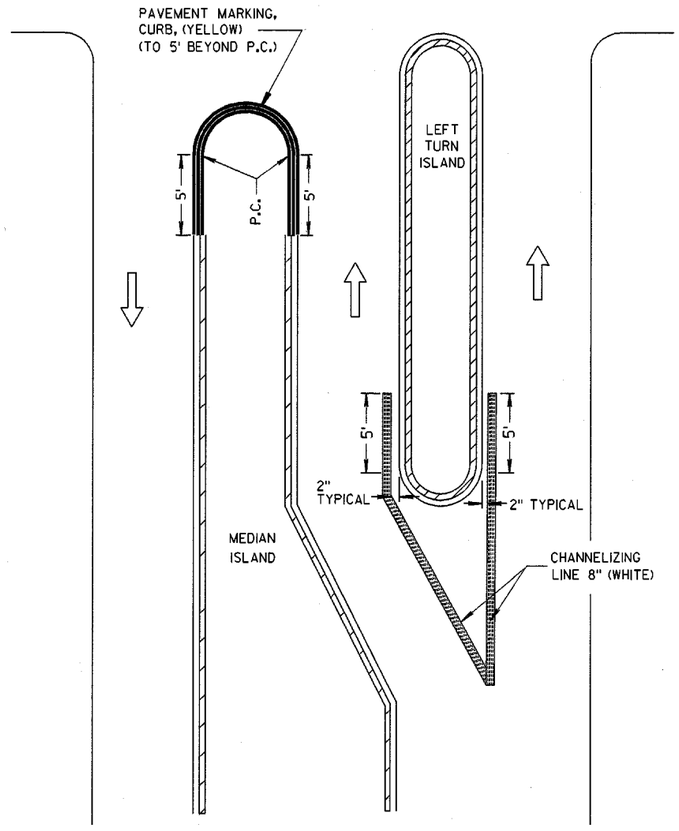

LEFT TURN & MEDIAN ISLAND

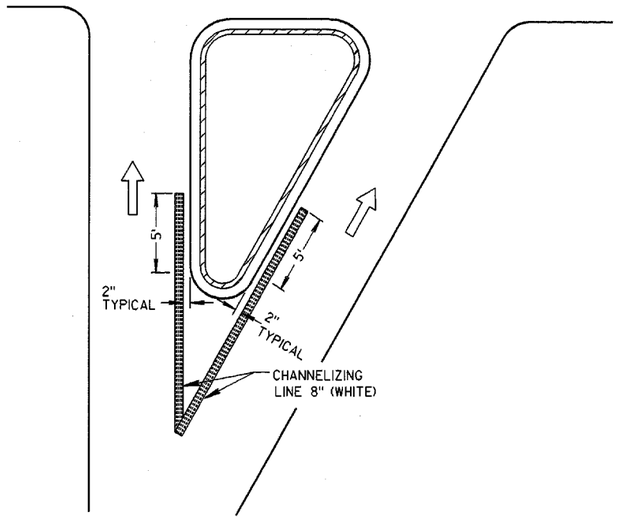

RIGHT TURN ISLAND

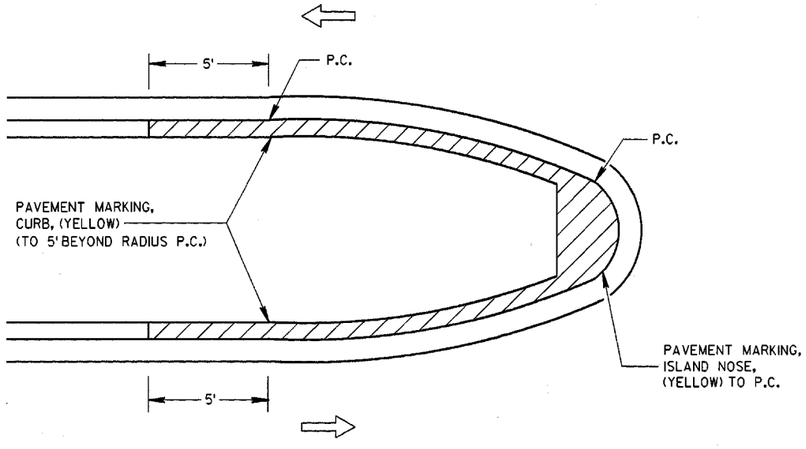

MEDIAN ISLAND WITH SLOPED NOSE

NOTE:
ARROW SYMBOL (⇨)
SHOWS DIRECTION OF TRAVEL

PAVEMENT MARKING
(ISLANDS, STOP LINE &
CROSS WALK)

STATE OF WISCONSIN
DEPARTMENT OF TRANSPORTATION

APPROVED
1-16-03 DATE
Deborah T. Kozal for
CHIEF SIGNS AND MARKING ENGINEER
FHWA

6

S.D.D. 15 C 8-10e

S.D.D. 15 C 8-10e

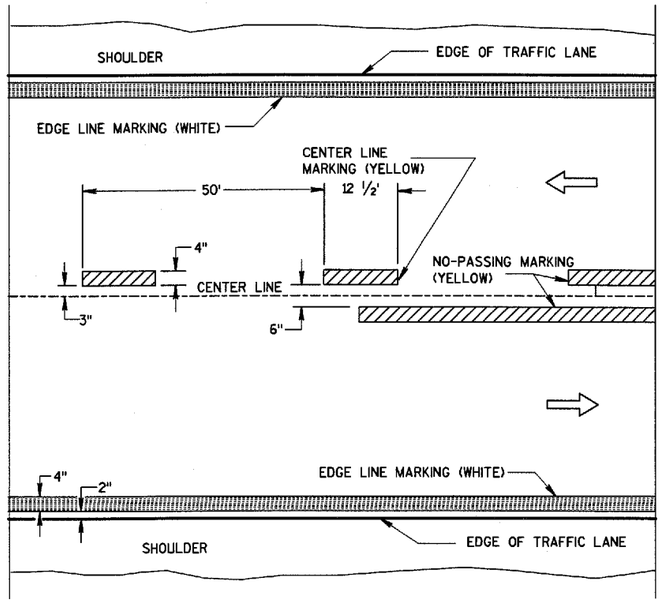

TWO WAY TRAFFIC

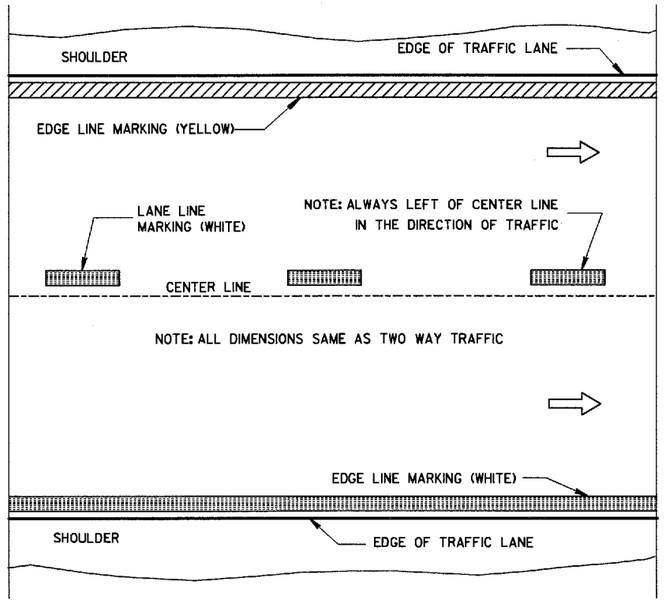

ONE WAY TRAFFIC

PERMANENT PAVEMENT MARKING

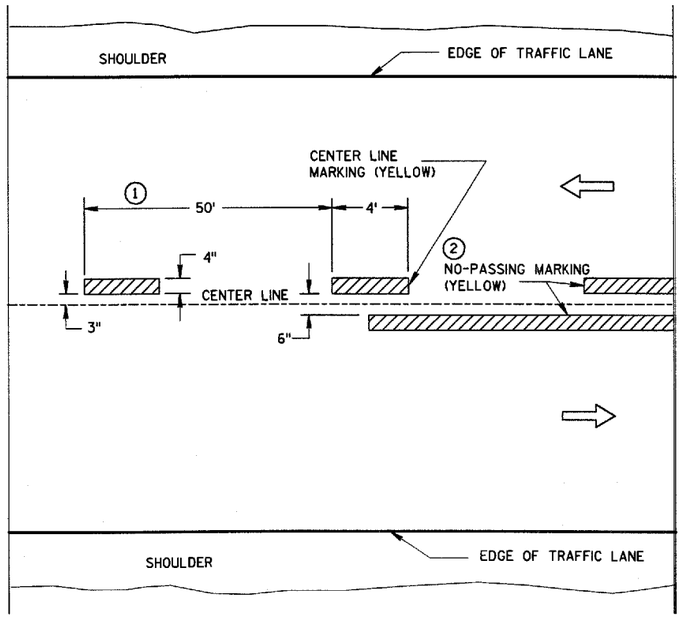

TWO WAY TRAFFIC

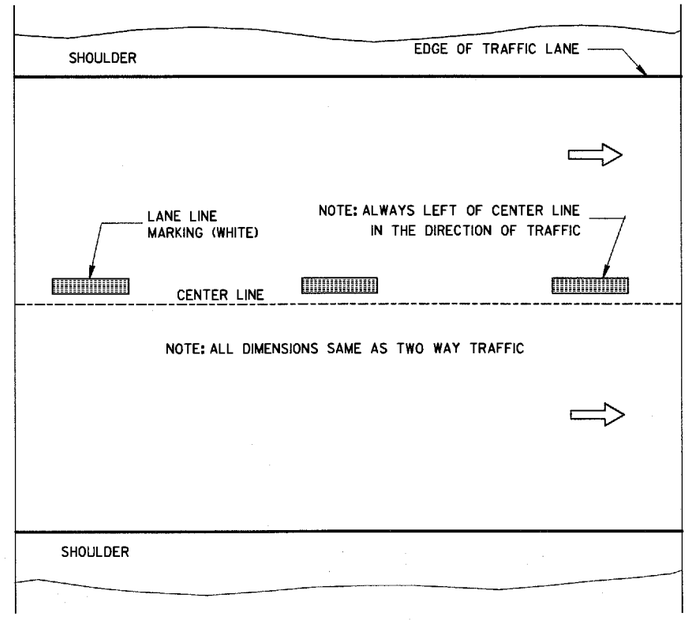

ONE WAY TRAFFIC

TEMPORARY (INTERMEDIATE) PAVEMENT MARKING

(SHOWS CYCLE FOR TEMPORARY CENTER LINE OR TEMPORARY LANE LINE MARKING)

GENERAL NOTES

DETAILS OF CONSTRUCTION NOT SHOWN ON THIS DRAWING SHALL CONFORM TO STANDARD SPECIFICATIONS AND SPECIAL PROVISIONS.

① HALF CYCLE LENGTHS (25'±) WITH 2' MINIMUM STRIPE LENGTHS SHALL BE PROVIDED ON ROADWAYS (INCLUDING TEMPORARY TRAVELED WAYS) WITH REVERSE CURVATURE, CURVATURE OF OVER 5 DEGREES OR WHEN DIRECTED BY THE ENGINEER TO MARK UNUSUAL ALIGNMENT OF THE TRAVELED WAY.

② NO PASSING ZONE TEMPORARY PAVEMENT MARKING IS REQUIRED TO BE PLACED, WHERE APPROPRIATE, ALONG WITH CENTERLINE TEMPORARY PAVEMENT MARKING WHEN A SAME DAY PERMANENT PAVEMENT MARKING ITEM IS INCLUDED IN THE CONTRACT.

NOTE

ARROW SYMBOL (⇨) SHOWS DIRECTION OF TRAVEL

PAVEMENT MARKING
(MAINLINE)

STATE OF WISCONSIN
DEPARTMENT OF TRANSPORTATION

APPROVED
2-17-00
DATE
Charles J. Sarver
CHIEF SIGNS AND MARKING ENGINEER
FHWA

S.D.D. 15 C 8-9a

S.D.D. 15 C 8-9a

NOTE:
ARROW SYMBOL (⇨)
SHOWS DIRECTION OF TRAVEL

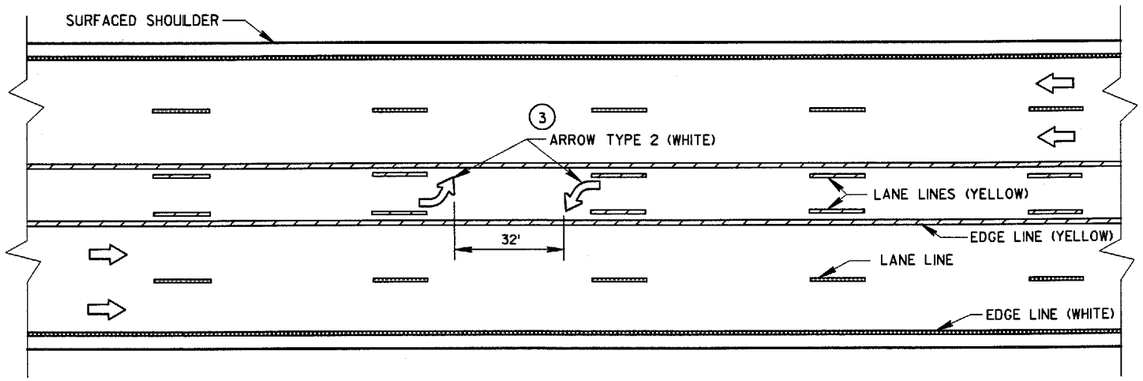

TWO WAY LEFT TURN LANE

NOTES:

1. STOP BAR IS REQUIRED ONLY WHEN SPECIFIED IN THE CONTRACT.
2. DISTANCE MAY BE ADJUSTED TO ACCOMODATE SHORT LEFT TURN LANES. AS APPROVED BY THE ENGINEER.
3. A SET OF ARROWS IS REQUIRED EVERY 400'OR NEAR INTERSECTIONS OR DRIVEWAYS WITH TURNING TRAFFIC.

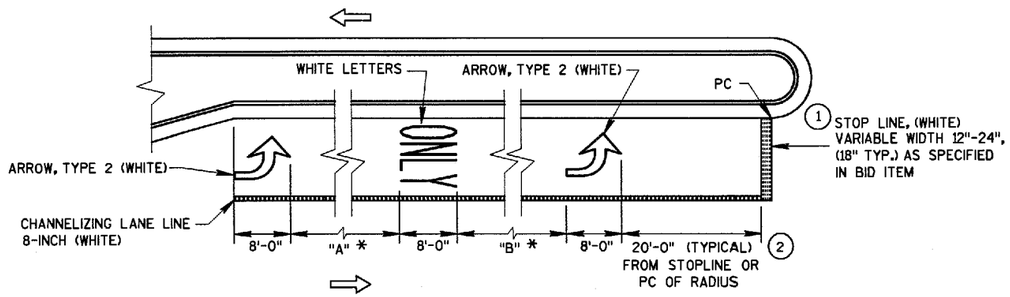

*VARIABLE, 32' MIN.
"A" = "B" (TYPICAL)

LEFT TURN LANE
(LENGTH 108' TO 167')

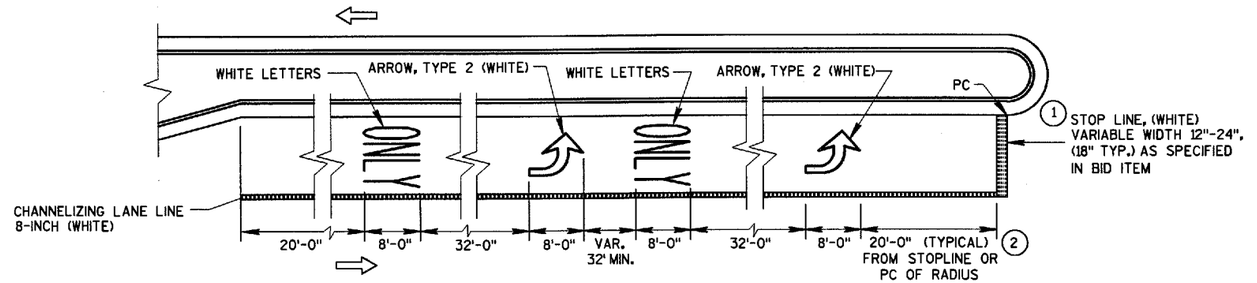

LEFT TURN LANE
(LENGTH OVER 167')

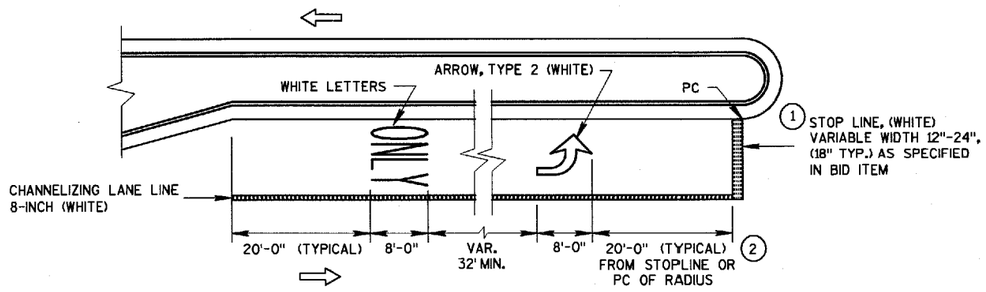

LEFT TURN LANE
(LENGTH UNDER 108')

PAVEMENT MARKING
(LEFT TURN LANE)

STATE OF WISCONSIN
DEPARTMENT OF TRANSPORTATION

S.D.D. 15 C 8-9d

S.D.D. 15 C 8-9d

LEGEND

- POST WITH ATTACHED SIGN
- POST WITH ATTACHED SIGN IN DRUM
- DRUM WITH WARNING LIGHT (TYPE C)
- DRUM
- ARROW BOARD
- 8' TYPE III BARRICADE
- REMOVING PAVEMENT MARKING
- DIRECTION OF TRAFFIC

GENERAL NOTES :

THE EXACT NUMBER, LOCATION, AND SPACING OF ALL SIGNS AND DEVICES SHALL BE ADJUSTED TO FIT FIELD CONDITIONS AS APPROVED BY THE ENGINEER.

THE SPACING BETWEEN SIGNS SHOULD BE ADJUSTED TO NOT CONFLICT WITH AND TO PROVIDE A MINIMUM OF 200 FEET, (500 FEET DESIREABLE) DISTANCE TO EXISTING SIGNS.

THIS LANE CLOSURE IS TYPICAL FOR CLOSING RIGHT LANE - REVERSE FOR CLOSING LEFT LANE.

ALL SIGNS ARE 48"x48" UNLESS OTHERWISE NOTED.

"WO" IS THE SAME AS "W" EXCEPT THE BACKGROUND IS ORANGE.

ANY SIGNS TEMPORARY OR EXISTING, WHICH CONFLICT WITH TRAFFIC CONTROL "IN USE" SHALL BE REMOVED OR COVERED AS NEEDED AND AS APPROVED BY THE ENGINEER. NO WARNING LIGHTS SHALL BE WORKING ON "COVERED" OR "DOWNED" SIGNS.

(1) CONSIDER GEOMETRICS WHEN LOCATING SIGNS AND ARROW BOARD SO THE DRIVER HAS A CLEAR VIEW OF THE ARROW BOARD AND LANE CLOSURE DRUMS FOR A MINIMUM 1500 FEET IN FRONT OF DRUMS.

FOR A LANE CLOSURE THAT IS IN PLACE LESS THAN 7 CONTINUOUS DAYS AND NIGHTS, THE ADVANCED WARNING SIGNS MAY BE MOUNTED ON PORTABLE SUPPORTS.

GENERAL NOTES CONTINUED:

REMOVE PAVEMENT MARKINGS IF LANE CLOSURE IS TO BE IN PLACE FOR LONGER THAN 7 CONTINUOUS DAYS AND NIGHTS.

WARNING LIGHTS ARE NOT REQUIRED IF THE LANE CLOSURE IS A DAYTIME ONLY OPERATION.

IF THE HORIZONTAL ALIGNMENT IS SUCH THAT A CURVE MAY REQUIRE ADDITIONAL DELINEATION, THE DEVICE SPACING MAY BE DECREASED TO 50' FEET.

IF LANE CLOSURE IS MORE THAN 1 MILE, PLACE A TYPE III BARRICADE APPROXIMATELY EVERY 1/4 MILE ACROSS THE CLOSED LANE TO HELP ENFORCE THE DRUM LINE.

ADJUSTMENTS IN BUFFER SPACE NEED TO BE INCORPORATED WHEN THE LANE CLOSURE OCCURS NEAR AN INTERCHANGE EXIT OR ENTRANCE RAMP. THE LANE CLOSURE MUST MUST TAKE PLACE FAR ENOUGH IN ADVANCE OF AN EXIT OR ENTRANCE RAMP TO STILL ALLOW FOR ADEQUATE BUFFER SPACE. THE MINIMUM LENGTH OF THE BUFFER SPACE BEFORE AN EXIT RAMP SHOULD BE 1/2 THE LENGTH OF THE TRANSITION AREA. THE ENTRANCE RAMP SHOULD BE FOLLOWED BY THE ORIGINAL BUFFER SPACE LENGTH OF 800 FEET DESIRABLE PRIOR TO ANOTHER TRAFFIC CONTROL CHANGE SUCH AS A CROSSOVER MANEUVER.

* THE LEFT REVERSE CURVE SIGN (W01-4L) IS ONLY REQUIRED WHEN THIS DETAIL IS USED IN COMBINATION WITH "SINGLE LANE CROSSOVER" DETAIL.

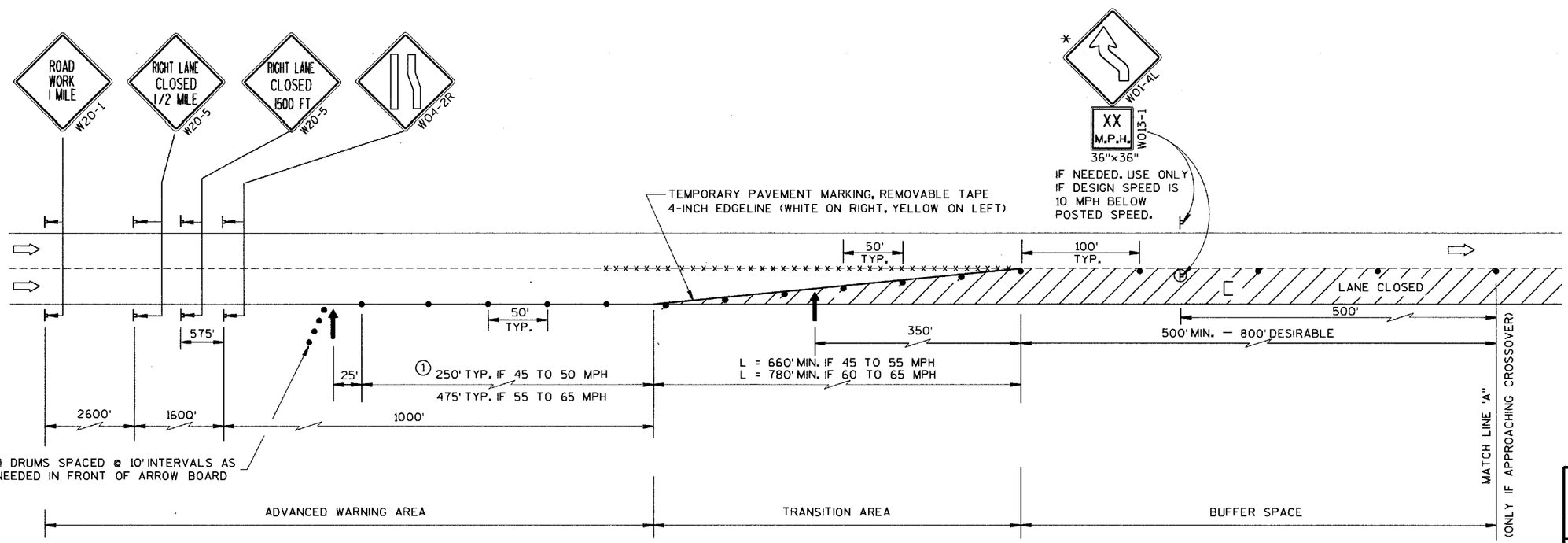

TRAFFIC CONTROL, LANE CLOSURE, SPEEDS GREATER THAN 40 M.P.H.

STATE OF WISCONSIN
DEPARTMENT OF TRANSPORTATION

APPROVED
8-7-95 DATE
Chester J. Spang for DIRECTOR, OFFICE OF TRAFFIC
FHWA

S.D.D. 15 D 12-2

S.D.D. 15 D 12-2

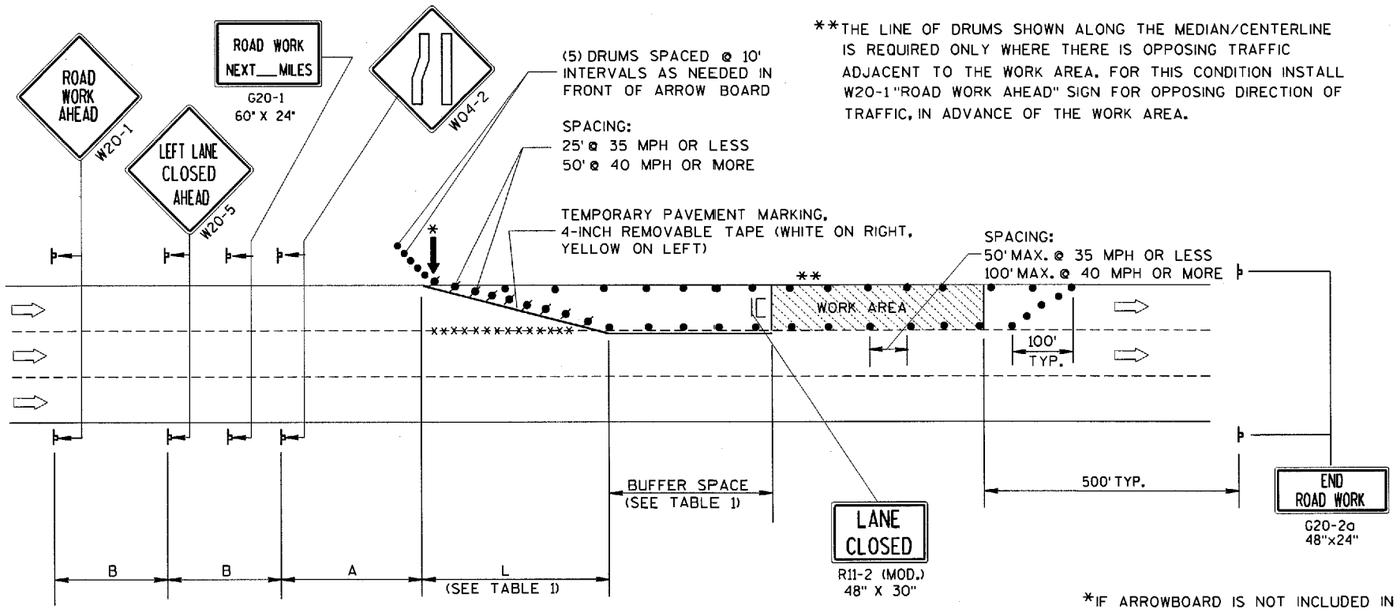

**THE LINE OF DRUMS SHOWN ALONG THE MEDIAN/CENTERLINE IS REQUIRED ONLY WHERE THERE IS OPPOSING TRAFFIC ADJACENT TO THE WORK AREA. FOR THIS CONDITION INSTALL W20-1 "ROAD WORK AHEAD" SIGN FOR OPPOSING DIRECTION OF TRAFFIC, IN ADVANCE OF THE WORK AREA.

B=400' AT 25-30 MPH
700' AT 35-40 MPH
1000' AT 45-55 MPH

A=200' AT 25-30 MPH
350' AT 35-40 MPH
500' AT 45-55 MPH

(PLACE BARRICADE AND SIGN APPROX. EVERY 1000' ACROSS THE CLOSED LANE)

*IF ARROWBOARD IS NOT INCLUDED IN MISCELLANEOUS QUANTITIES, SUBSTITUTE A TYPE III BARRICADE WITH W01-6 SIGN IN THE LANE CLOSURE TAPER.

W01-6
48"x24"

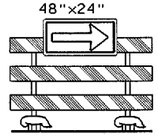

TABLE 1
TAPER AND BUFFER SPACE FOR 12' LANE WIDTH

S	L	BUFFER SPACE
25	125'	55'
30	180'	85'
35	245'	120'
40	320'	170'
45	540'	220'
50	600'	280'
55	660'	335'

FOR LANE WIDTH OTHER THAN 12':

L = WS AT 45 MPH OR GREATER

L = $\frac{WS^2}{60}$ AT 40 MPH OR LESS

L = TAPER LENGTH IN FEET

S = NON-CONSTRUCTION SPEED LIMIT (MPH)

W = WIDTH OF LANE CLOSURE

LEGEND

- DRUM WITH/WITHOUT WARNING LIGHT, TYPE C (STEADY-BURN)
- POST MOUNTED SIGN
- ARROW BOARD
- TYPE III BARRICADE (8' EQUIVALENT) AND WARNING LIGHTS, TYPE A (FLASHING) WITH/WITHOUT SIGN
- DIRECTION OF TRAFFIC FLOW
- xxxx REMOVING PAVEMENT MARKING (SEE GENERAL NOTES)

GENERAL NOTES

THIS LANE CLOSURE DETAIL IS TYPICAL FOR CLOSING THE LEFT LANE. FOR A RIGHT LANE CLOSURE, REVERSE THE TRAFFIC CONTROL.

THIS DETAIL MAY BE USED FOR ROADWAYS WITH EITHER TWO OR THREE LANES IN EACH DIRECTION.

THE EXACT NUMBER, LOCATION, AND SPACING OF ALL SIGNS AND DEVICES SHALL BE ADJUSTED TO FIT FIELD CONDITIONS AS APPROVED BY THE ENGINEER.

THE SPACING BETWEEN TRAFFIC CONTROL SIGNS SHOULD BE ADJUSTED TO NOT CONFLICT WITH AND SHOULD PROVIDE A DESIRABLE MINIMUM OF 200 FEET CLEARANCE TO EXISTING SIGNS THAT WILL REMAIN IN PLACE.

ALL SIGNS ARE 48"x48" UNLESS OTHERWISE NOTED. IF NECESSARY DUE TO SPACE CONSTRAINTS IN URBAN AREAS, 36" X 36" SIGNS MAY BE USED IF APPROVED BY DISTRICT TRAFFIC UNIT.

"WO" SIGNS ARE THE SAME AS "W" SIGNS EXCEPT THE BACKGROUND IS ORANGE.

SIGNS THAT WILL BE IN PLACE LESS THAN 7 CONTINUOUS DAYS AND NIGHTS, OR THAT WILL BE PLACED IN A CLOSED LANE, MAY BE MOUNTED ON PORTABLE SUPPORTS.

ANY SIGNS TEMPORARY OR EXISTING, WHICH CONFLICT WITH TRAFFIC CONTROL "IN USE" SHALL BE REMOVED OR COVERED AS NEEDED AND AS APPROVED BY THE ENGINEER.

REMOVE PAVEMENT MARKINGS AND PLACE TEMPORARY PAVEMENT MARKING, REMOVABLE TAPE IF LANE CLOSURE IS TO BE IN PLACE FOR 7 OR MORE CONTINUOUS DAYS AND NIGHTS.

ON UNDIVIDED ROADWAYS, OMIT THE SIGNS SHOWN ON LEFT SIDE OF ROAD.

W20-1, G20-1 AND G20-2A SIGNS ARE NOT REQUIRED IF THE LANE CLOSURE IS WITHIN A LARGER WORK ZONE WHERE THESE SIGNS ARE ALREADY PRESENT.

OMIT G20-1 SIGNS IF LENGTH OF WORK AREA IS 2 MILES OR LESS.

CONSIDER GEOMETRICS WHEN LOCATING SIGNS AND ARROWBOARDS SO THE APPROACHING DRIVER HAS A CLEAR VIEW OF THE ARROWBOARDS AND LANE CLOSURE DRUMS.

PLACE THE ARROWBOARD AS CLOSE AS POSSIBLE TO THE BEGINNING OF THE LANE CLOSURE TAPER, PREFERABLY ON THE SHOULDER OR TERRACE.

CHANNELIZING DEVICES PLACED ADJACENT TO WORK AREA SHALL BE PULLED BACK FROM THE TRAVEL LANE WHEN WORK IS NOT IN PROGRESS.

BARRICADES IN A CLOSED LANE THAT MUST BE MOVED FOR A WORK OPERATION SHALL BE IMMEDIATELY RE-ESTABLISHED UPON COMPLETION OF THE OPERATION OR, FOR CONTINUING OPERATIONS, AT THE END OF EACH WORKING DAY.

WARNING LIGHTS ARE NOT REQUIRED IF THE LANE CLOSURE IS A DAYTIME ONLY OPERATION.

TRAFFIC CONTROL, SINGLE LANE CLOSURE, NON-FREEWAY/EXPRESSWAY

STATE OF WISCONSIN
DEPARTMENT OF TRANSPORTATION

APPROVED
5/23/00
DATE
Curtis J. Sprung
CHIEF SIGNS AND MARKING ENGINEER
FHWA

S.D.D. 15 D 20-1

S.D.D. 15 D 20-1

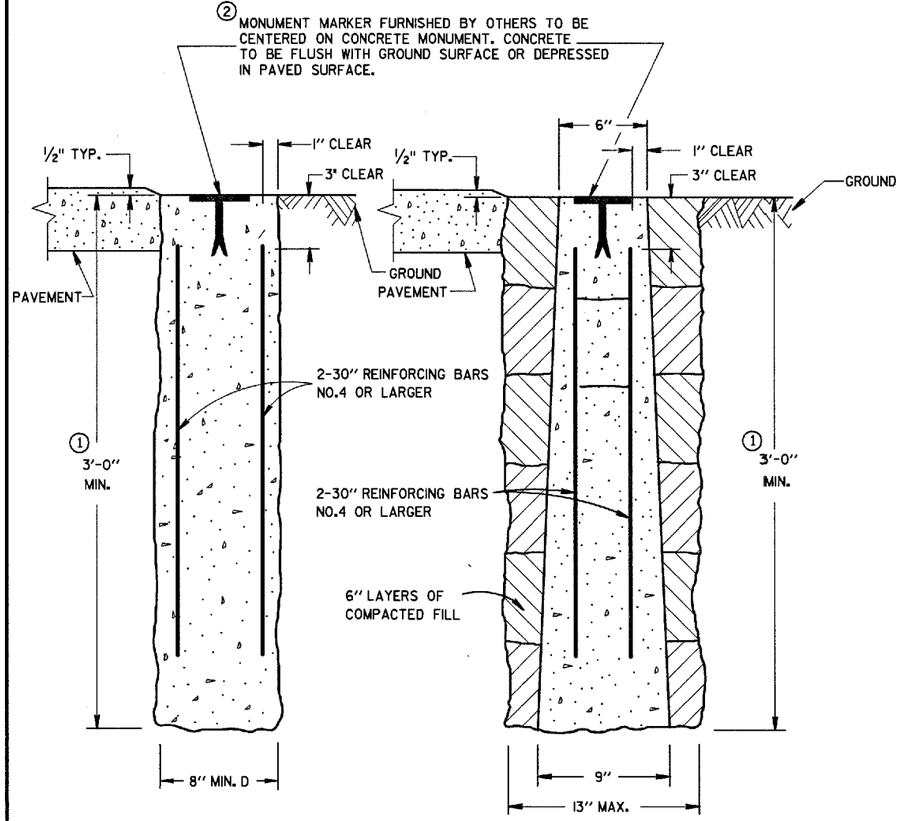

CAST-IN-PLACE PRECAST

CONCRETE MONUMENTS

TYPE A

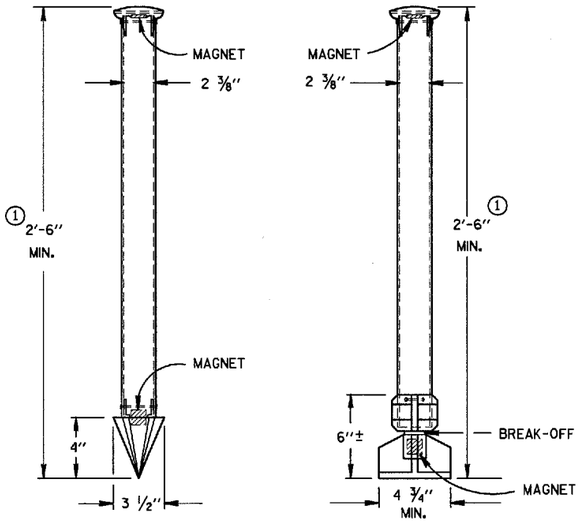

TYPE C

DRIVE-IN MONUMENT

TYPE D

BREAK-OFF MONUMENT

ALUMINUM MONUMENTS

(INCLUDES MARKER)

GENERAL NOTES

DETAILS OF CONSTRUCTION, MATERIALS AND WORKMANSHIP NOT SHOWN ON THIS DRAWING SHALL CONFORM TO THE PERTINENT REQUIREMENTS OF THE STANDARD SPECIFICATIONS AND THE APPLICABLE SPECIAL PROVISIONS.

DETAILED DRAWINGS OF PROPOSED ALTERNATE DESIGNS FOR METAL MONUMENTS OR MONUMENT COVERS SHALL BE SUBMITTED TO THE ENGINEER FOR APPROVAL.

INSTALLED METAL MONUMENTS MUST BE EASILY DETECTED WITH A DIP NEEDLE. INSERT PERMANENT MAGNETS SHALL BE ATTACHED NEAR THE TOP AND BOTTOM OF THOSE MONUMENTS CONSTRUCTED OF A METAL ALLOY WHICH IS NOT ATTRACTIVE TO A DIP NEEDLE.

THE CAST IRON MONUMENT COVER SHALL BE A "NON-ROCKING" TYPE. ADJUSTMENT OF THE COVER TO GRADE MAY BE ACCOMPLISHED BY THE USE OF MORTAR AND BRICK, OR BY EITHER PRECAST OR CAST-IN-PLACE REINFORCED CONCRETE GRADE RINGS.

MONUMENTS SHALL BE LOCATED AND PLACED AT THE DIRECTION OF THE ENGINEER.

ALUMINUM MONUMENTS AND MONUMENT COVERS SHALL BE MADE FROM AN ALUMINUM AND MAGNESIUM ALLOY AS DETERMINED BY THE MANUFACTURER.

THE MONUMENT COVERS DETAILED ON THIS DRAWING ARE NOT EQUAL ALTERNATES. MONUMENT COVERS SHALL BE CAST IRON UNLESS ALUMINUM IS SPECIFIED ELSEWHERE IN THE CONTRACT.

MONUMENT SHALL BE CAST-IN-PLACE CONCRETE UNLESS PRECAST CONCRETE OR ALUMINUM MONUMENTS ARE SPECIFIED IN THE CONTRACT OR PERMITTED BY THE ENGINEER.

① MINIMUM LENGTH SHALL BE 4'-0" FOR MONUMENTS INSTALLED IN PAVED AREAS.

② AN OFFICIAL COUNTY MONUMENT MARKER SUPPLIED BY A COUNTY MAY BE REQUIRED FOR SOME SECTION CORNERS AND WITNESS MONUMENTS INSTEAD OF THIS WIS DOT MARKER.

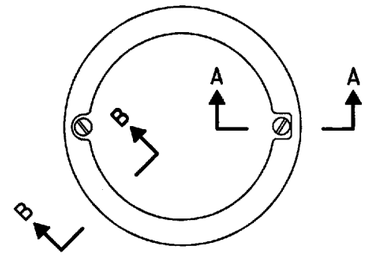

TOP VIEW

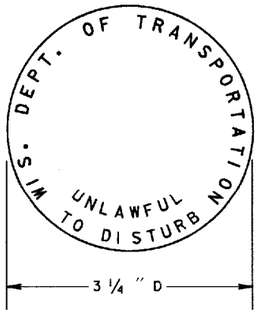

② WIS DOT MONUMENT MARKER LOGO

FOR TYPES "A", "C" & "D"

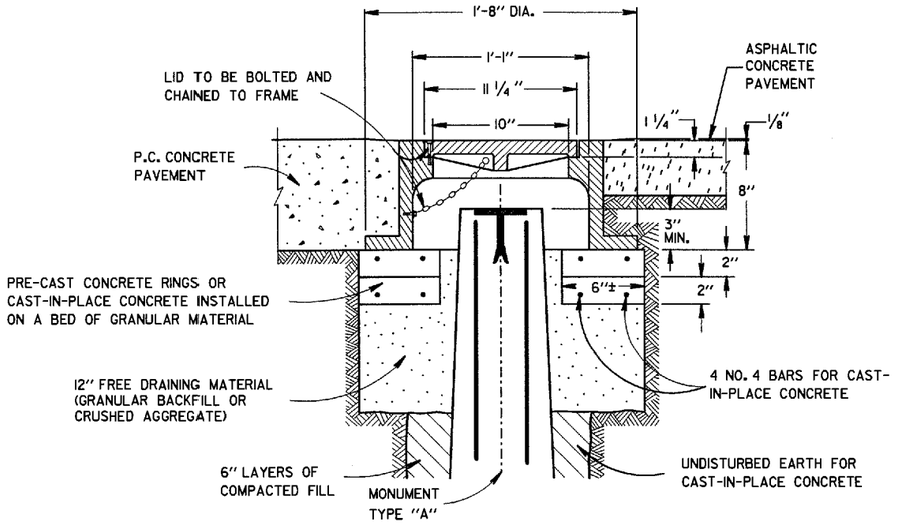

CAST IRON MONUMENT COVER

(APPROXIMATE WEIGHT - 95 LBS.)

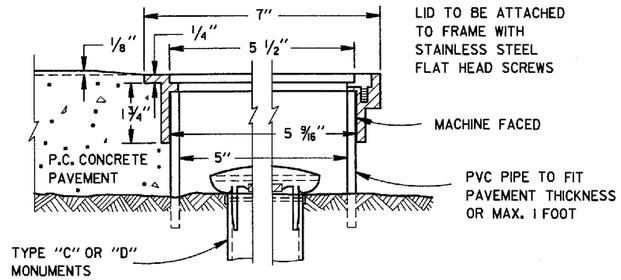

SECTION B-B SECTION A-A

ALUMINUM MONUMENT COVER

(APPROXIMATE WEIGHT 2 LBS)

(FOR CONCRETE PAVEMENT ONLY)

LANDMARK REFERENCE MONUMENTS AND COVERS

STATE OF WISCONSIN
DEPARTMENT OF TRANSPORTATION

APPROVED 9/22/99 DATE

CHIEF ROADWAY DEVELOPMENT ENGINEER

FHWA

S.D.D. 16 A 1-6

S.D.D. 16 A 1-6

URBAN AREA

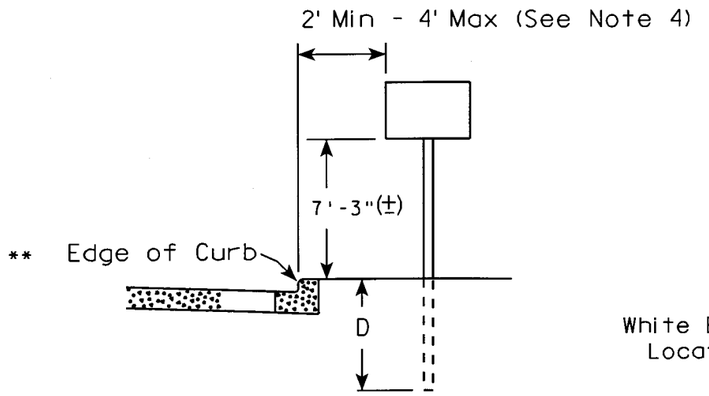

RURAL AREA (See Note 2)

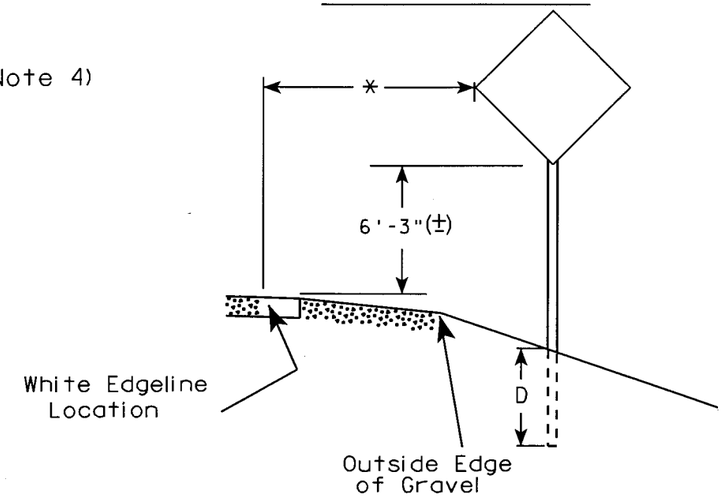

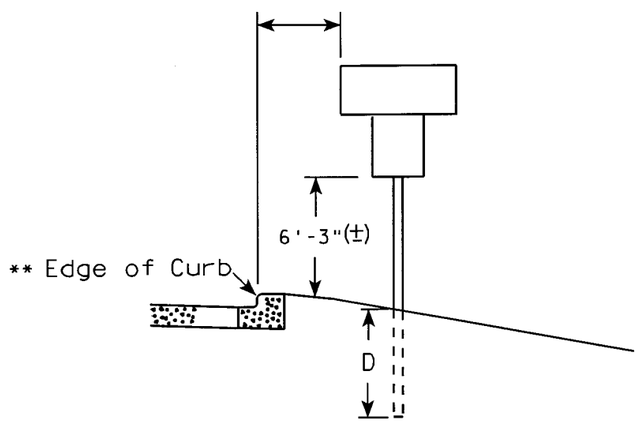

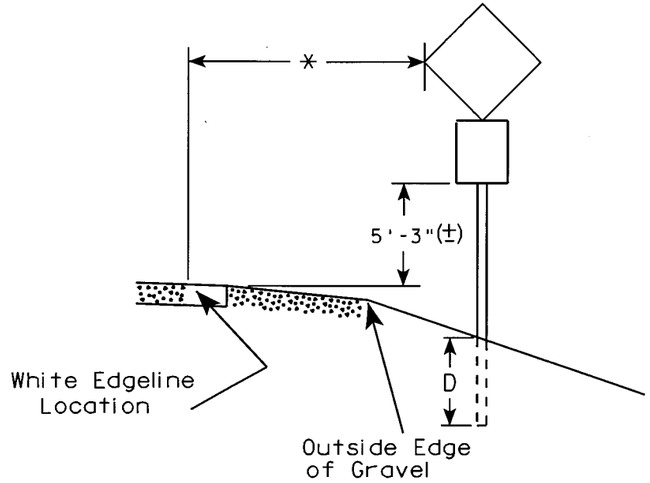

GENERAL NOTES

1. Signs wider than 4 feet or larger than 20 sq. ft. shall be mounted on multiple posts. Refer to plate A4-4.
2. For expressways and freeways, mounting height is 7'- 3" (±) or 6'-3" (±) depending upon existence of a sub-sign.
3. Minimum mounting height for J assemblies (A4-5) is 7'-3" (±) or 6'-3" (±) per urban or rural detail respectively.
4. Minimum mounting height for signs mounted on traffic signal poles is 5'- 3" (±).
5. Offset distance shall be consistent with existing signs or consistent throughout length of project.
6. The (±) tolerance for mounting height is 3 inches.

POST EMBEDMENT DEPTH

Area of Sign Installation (Sq. Ft.)	D (Min)
20 or Less	4'
Greater than 20	5'

** The existence of curb and gutter does not in itself mandate the vertical clearance illustrated. That height is typically where there is sidewalk adjacent to the roadway or parking is permitted. This same criteria applies to mountable curb as well and measurement shall be taken from flow line.

* 6 feet from edge of a paved shoulder or 12 feet from the edge of pavement (edge line location) or 2 feet from outside edge of gravel, whichever is greater unless directed by project engineer.

TYPICAL INSTALLATION OF PERMANENT TYPE II SIGNS ON SINGLE POSTS

WISCONSIN DEPT OF TRANSPORTATION

APPROVED Matthew R Rauch
for State Traffic Engineer

DATE 2/20/03 PLATE NO. A4-3.12

7

STATE PROJECT NUMBER:	HWY:	COUNTY:			SHEET NO: 190	E

FILE NAME : C:\Users\Projects\tr_stdplate\A43.DGN PLOT DATE : 05-APR-2004 06:46 PLOT BY : DOTDZK PLOT NAME : REV DATE : 12/20/02 Originator : Sandy Anderson PLOT SCALE : 101.632952:1.000000

WISDOT/CADDS SHEET 42

LEVELS ON - 2, 5,6, 10,11,12,13,14,15,16,

57,58,59,60,61,62,63

URBAN AREA

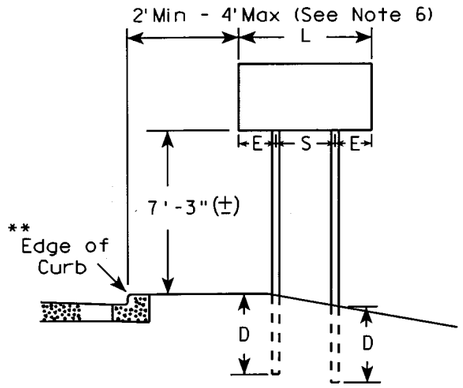

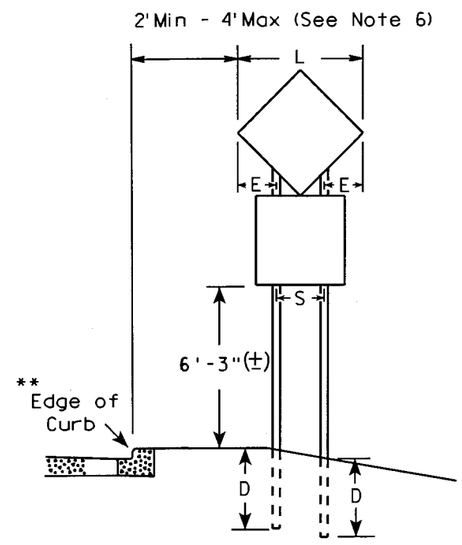

RURAL AREA (See Note 3)

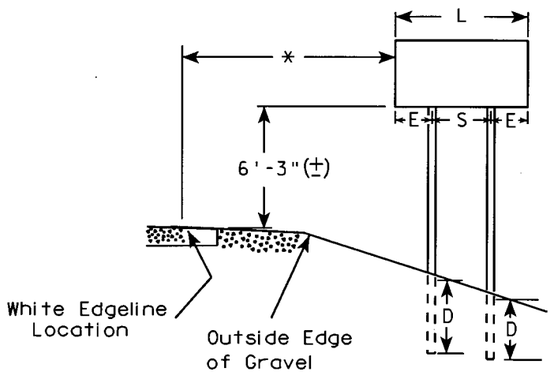

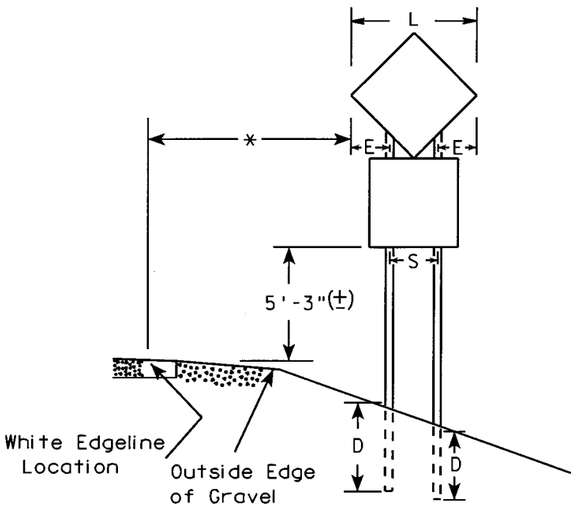

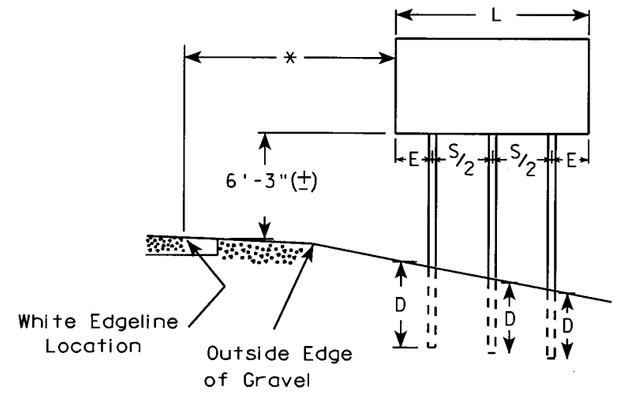

GENERAL NOTES

1. For 3 post installations, spacing is S/2 and S must be greater than 7'-0".
2. For 4 post installations, spacing is S/3 and S must be greater than 10'-6".
3. For expressways and freeways, mounting height is 7'-3" (±) or 6'-3" (±) depending upon existence of sub-sign.
4. The (±) tolerance for mounting height is 3 inches.
5. Minimum mounting height for J assemblies (A4-5) is 7'-3" (±) or 6'-3" (±) per urban or rural detail respectively.
6. Offset distance shall be consistent with existing signs or consistent throughout length of project.

* 6 feet from edge of a paved shoulder or 12 feet from the edge of pavement (edge line location) or 2 feet from outside edge of gravel, whichever is greater unless directed by project engineer.

** The existence of curb and gutter does not in itself mandate the vertical clearance illustrated. That height is typically where there is sidewalk adjacent to the roadway or parking is permitted. This same criteria applies to mountable curb as well and measurement shall be from the flow line.

DIAMOND SHAPED SIGNS		
L	S	E
Less than 60"	20"	L/2 - 10
60"--72"	32"	L/2 - 16
Greater than 72"	3 L/5	L/5

SIGN SHAPE OTHER THAN DIAMOND (Two Post Installations)		
L	S	E
Less than 60"	L-24"	12"
60" or more	3 L/5	L/5

POST EMBEDMENT DEPTH

Area of Sign Installation (Sq. Ft.)	D (Min)
20 or Less	4'
Greater than 20	5'

TYPICAL INSTALLATION OF TYPE II SIGNS ON MULTIPLE POSTS

WISCONSIN DEPT OF TRANSPORTATION

APPROVED Matthew R Rauch
for State Traffic Engineer

DATE 2/20/03 PLATE NO. A4-4.7

STATE PROJECT NUMBER:	HWY:	COUNTY:			SHEET NO: 191	E

FILE NAME : C:\Users\Projects\tr_stdplate\A44.DGN PLOT DATE : 05-APR-2004 06:48 PLOT BY : DOTDZK PLOT NAME : ORG DATE : Originator : Sandy Anderson PLOT SCALE : 103.686747:1.000000

WISDOT/CADDS SHEET 42

7

57,58,59,63

LEVELS ON • 1,2,3, 5,6, 10,

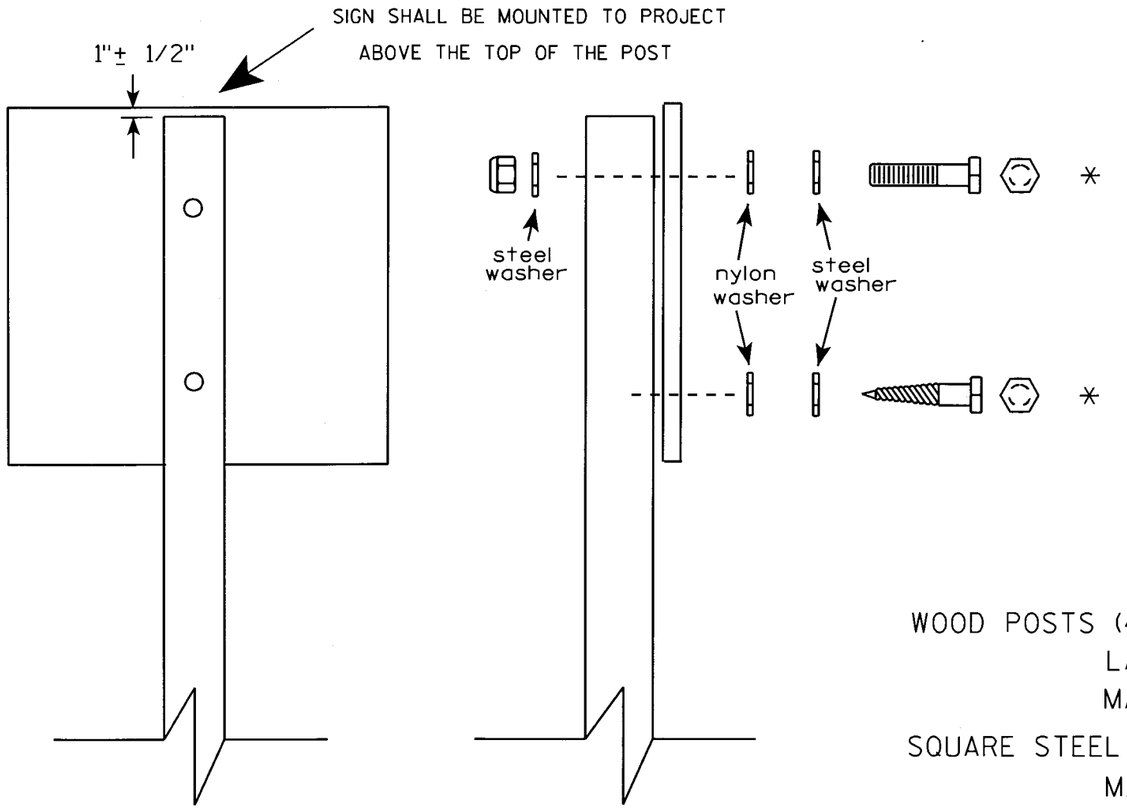

Nuts, bolts and lags used for mounting signs shall have hexagonal heads and shall be either :

a. Hot dip or mechanically galvanized in accordance with ASTM Designation: A 153, Class D, or
b. Cadmium plated in accordance with ASTM Designation : B 766 TYPE 3, Class 12, or
c. Electro-galvanized in accordance with ASTM Designation : B 633, TYPE III, SC 3.

Threads on bolts and nuts shall be manufactured with sufficient allowance for the cadmium plate or galvanized coating to permit the nuts to run freely on the bolts.

WOOD POSTS (4" x 4" or 4" x 6")
LAG SCREWS - 3/8" X 3"
MACHINE BOLTS - 5/16" X 6-1/2" or 7" Length w/ nuts

SQUARE STEEL POSTS (2" x 2")
MACHINE BOLTS - 3/8" X 3-1/4" Length w/ nuts

WASHERS (ALL POSTS) -
1-1/4" O.D. X 3/8" I.D. X 1/16" STEEL
1-1/4" O.D. X 3/8" I.D. X .080 NYLON for all Type H signs.

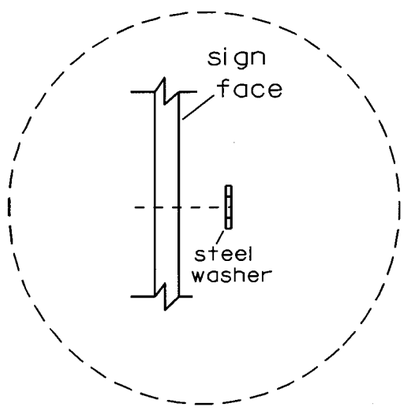

Washer Placement when Sign Has Other Than Type H or Type F Face

* Two different fastening systems are shown for illustration purposes. On any individual sign, either one or the other system shall be used. Actual number of fasteners per sign varies with the sign area, but normally there are two. For a single post installation, all signs 9 sq. ft. or larger require the use of 3 fasteners.

7

ATTACHMENT OF SIGNS TO POSTS

WISCONSIN DEPT OF TRANSPORTATION

APPROVED Chester J Spang for State Traffic Engineer

DATE 4/03/02 PLATE NO. A4-8.5

STATE PROJECT NUMBER:

SHEET NO: 192 E

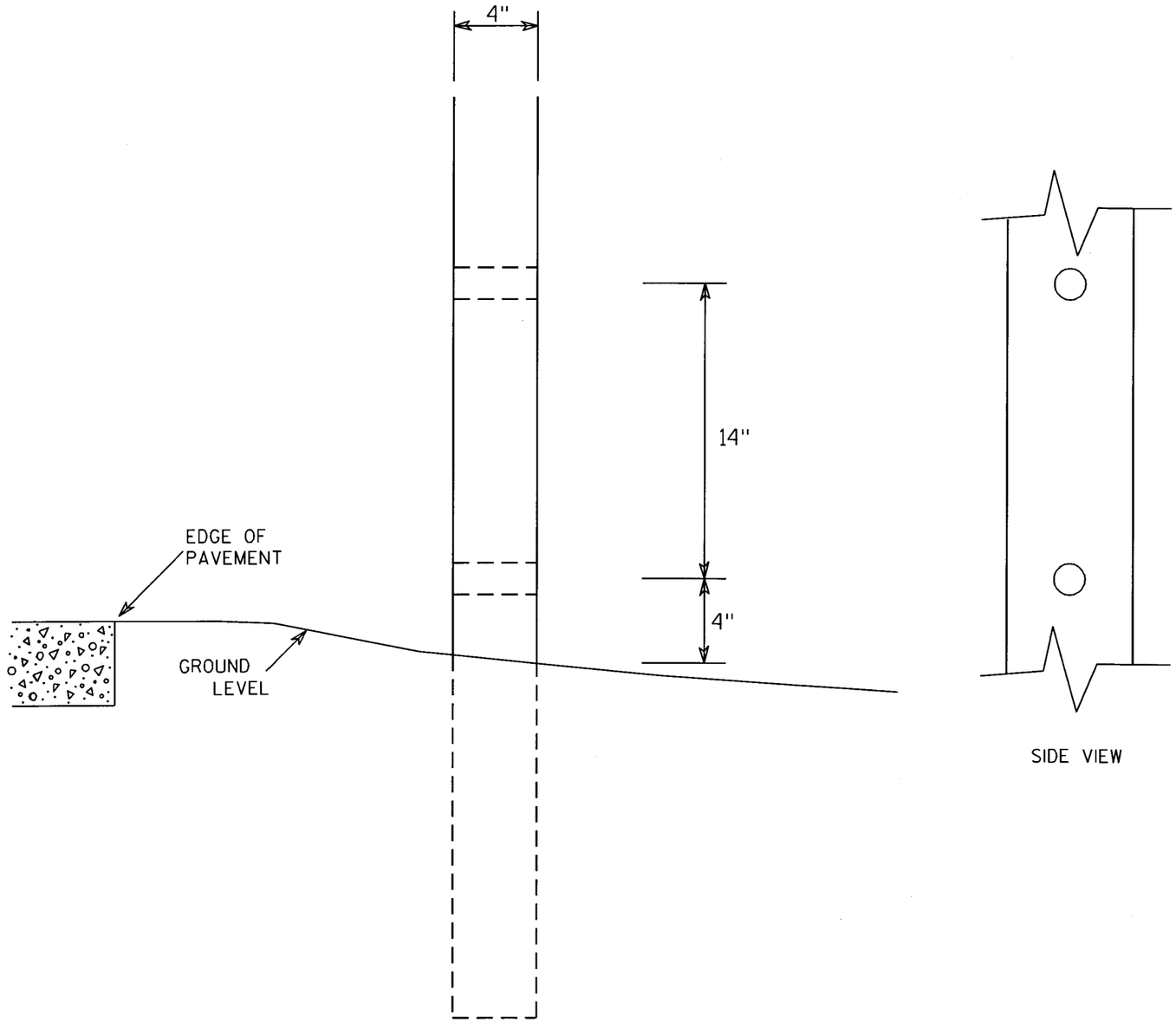

SIDE VIEW

GENERAL NOTES

1. All 4 x 6 Wood Posts shall be modified by having two 1½" diameter holes drilled perpendicular to the roadway centerline.

7

4 X 6 WOOD POST MODIFICATIONS

WISCONSIN DEPT OF TRANSPORTATION

APPROVED Chester J Spang for State Traffic Engineer

DATE 3/27/97 PLATE NO. A4-11.2

STATE PROJECT NUMBER:

SHEET NO: 193 E

57.58.59.60.61.62.63
LEVELS ON - 2.3.4.5.6. 10. 18.
FILE NAME : C:\Users\Projects\tr_stdplate\A411.DGN PLOT DATE : 05-APR-2004 06:54 PLOT BY : DOTDZK ORG DATE : 3/27/97 Originator : DON KLUEVER
WISDOT/CADDS SHEET 42

BRACE BANDING

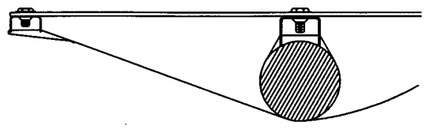

DETAIL C
CADMIUM PLATED STEEL BOLT
THROUGH BLACK BORDER

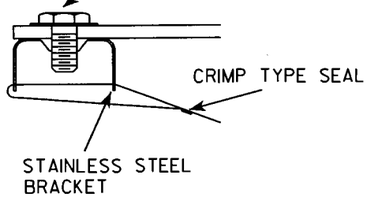

DETAIL C

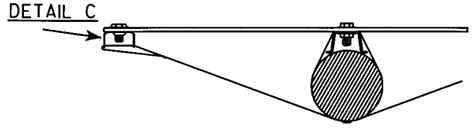

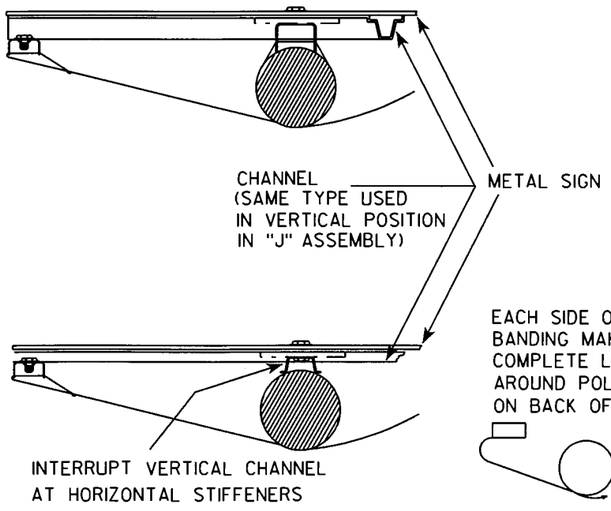

EACH SIDE OF BRACE BANDING MAKES ONE COMPLETE LOOP AROUND POLE-SEAL ON BACK OF POLE

BRACKET BANDING

SINGLE SIGN

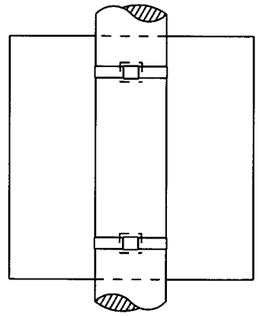

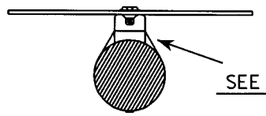

"J" ASSEMBLY

CHANNEL
SEE TYPICAL PANEL
INSTALLATION SHEET

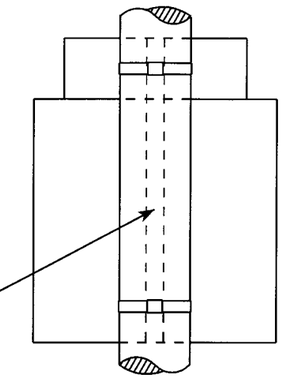

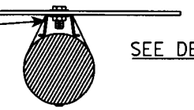

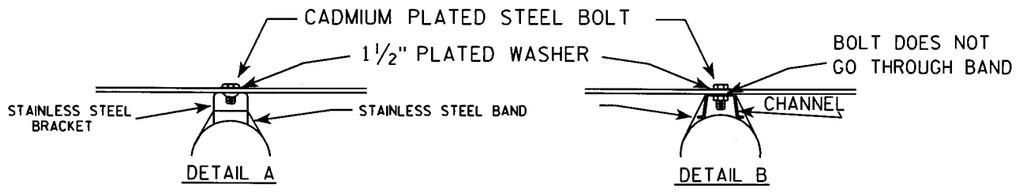

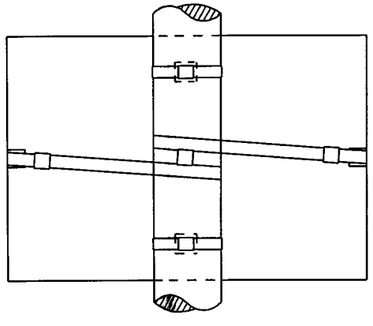

BRACE BANDING

BRACE BANDING SHALL BE TIGHTENED FIRMLY BUT NOT SO TIGHT AS TO APPRECIABLY CURVE FACE OF SIGN.

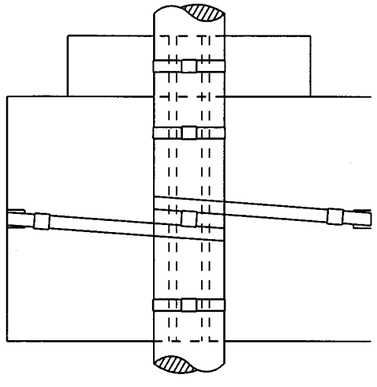

GENERAL NOTES

1. Signs 4' or greater in width shall have one brace band installed at the center of the sign.
2. Signs 3' or greater in height shall have three bracket bands installed. Signs less than 3' in height shall have two bracket bands installed.
3. Banding and assembly bracket shall be stainless steel. All bands shall be ¾" in width and 0.025" thickness.

STANDARD SIGN
SIGN BANDING DETAILS

WISCONSIN DEPT OF TRANSPORTATION

APPROVED Matthew R Rauch
for State Traffic Engineer

DATE 2/03/03 PLATE NO. A5-9.1

7

STATE PROJECT NUMBER:	HWY:	COUNTY:			SHEET NO: 194	E

FILE NAME : C:\Users\Projects\tr_stdplate\A59.DGN PLOT DATE : 05-APR-2004 07:34 PLOT BY : DOTDZK PLOT NAME : ORG DATE : Feb 2003 Originator : Sandy Anderson PLOT SCALE : 35.891566:1.000000
WISDOT/CADDS SHEET 42

LEVELS ON • 2,3,4,5,6,7, 10.
57,58,59,60, 63

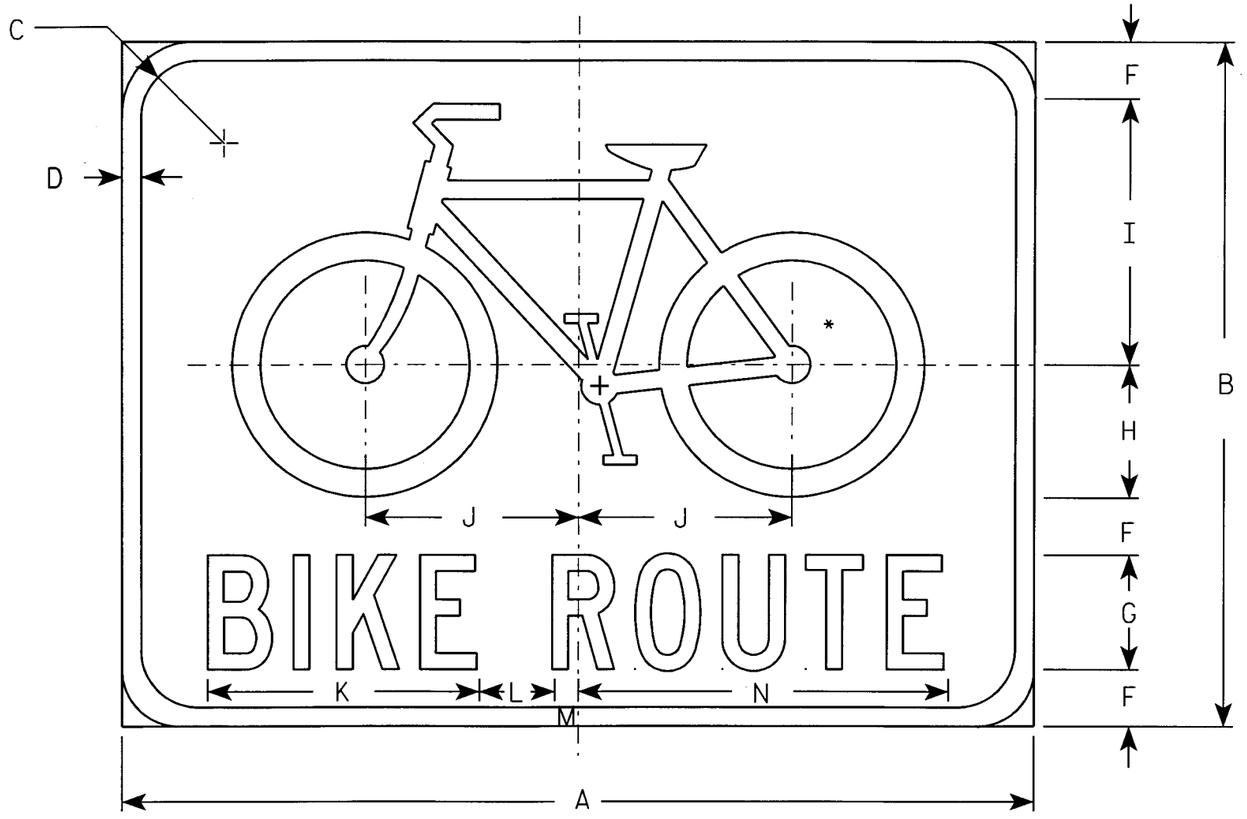

D11-1

NOTES

1. Sign is Type II - Type H Reflective - reference WIS DOT Standard Specification for HIGHWAY and STRUCTURE CONSTRUCTION latest edition.
2. Color:
   Background - GREEN
   Message - WHITE
3. Message Series - C
4. Corners may be square or rounded when base material is plywood but borders shall be rounded as shown. When base material is metal, the corners and borders shall be rounded.

* See W11-1 for symbol design

Metric equivalent for this sign is:

SIZE	
1	
2	600 mm X 450 mm
3	750 mm X 600 mm
4	
5	

SIZE	A	B	C	D	E	F	G	H	I	J	K	L	M	N	O	P	Q	R	S	T	U	V	W	X	Y	Z	Area sq. ft.	Area m2
1																												
2	24	18	1 1/2	1/2		1 1/2	3	3 1/2	7	5 5/8	7 1/8	2	5/8	9 3/4													3.0	0.27
3	30	24	1 1/4	5/8		2	4	4 3/4	9 1/4	7 1/2	9 1/2	2 5/8	7/8	13													5.0	0.45
4																												
5																												

STANDARD SIGN
D11-1

WISCONSIN DEPT OF TRANSPORTATION

APPROVED Matthew R Rauch
for State Traffic Engineer

DATE 3/24/04 PLATE NO. D11-1.1

PROJECT NO:

SHEET NO: 195 E

FILE NAME : C:\Users\Projects\tr_stdplate\D111.DGN PLOT DATE : 05-APR-2004 07:36 PLOT BY : DOTDZK

WISDOT/CADDS SHEET 42

7

7

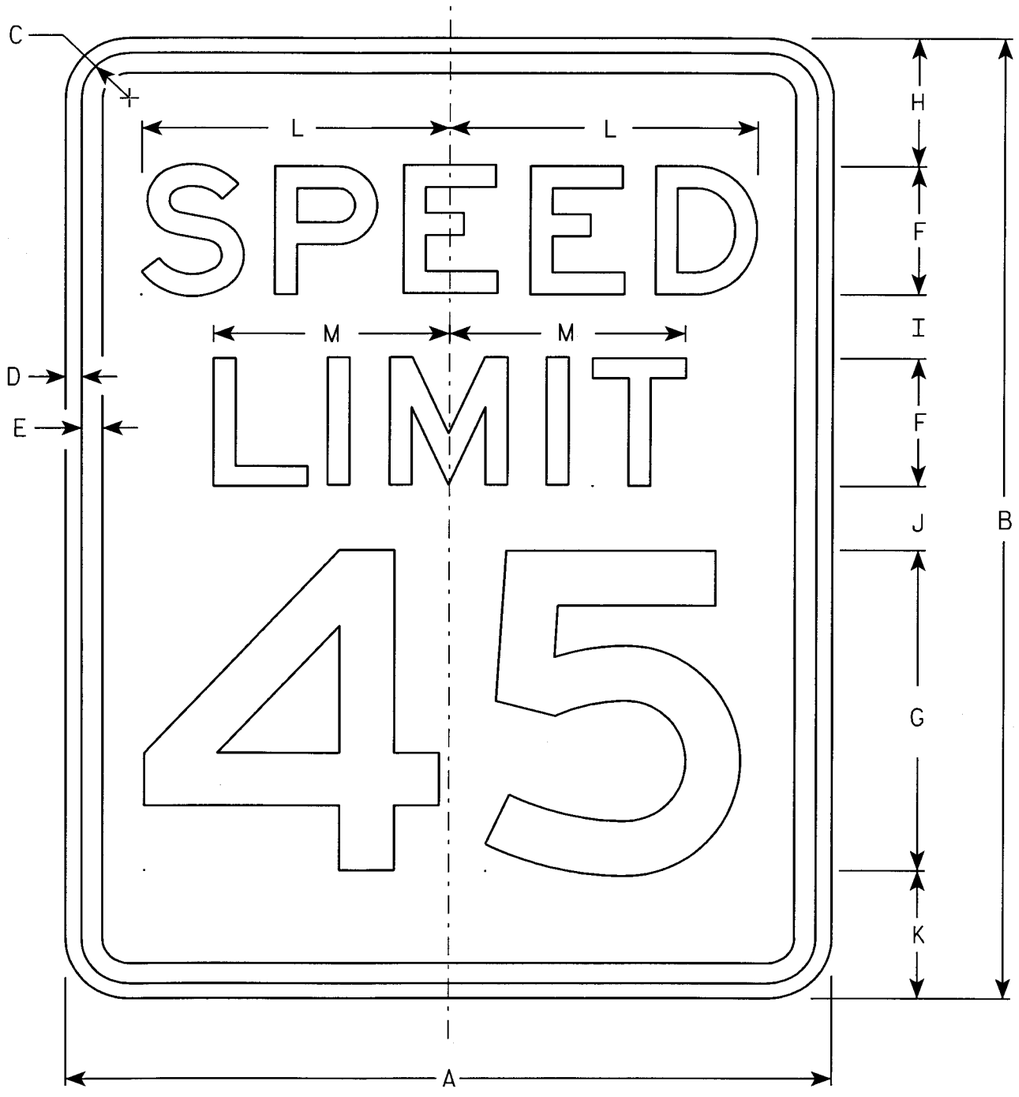

R2-1

NOTES

1. Sign is Type II - Type H Reflective - reference WIS DOT Standard Specification for HIGHWAY and STRUCTURE CONSTRUCTION latest edition.
2. Color:
   Background - White
   Message - Black
3. Message Series - E
4. Corners may be square or rounded when base material is plywood but borders shall be rounded as shown. When base material is metal, the corners and borders shall be rounded.
5. Substitute appropriate numerals and optically adjust spacing to achieve proper balance.

Metric equivalent for this sign is:

SIZE	
1	450 mm X 600 mm
2	600 mm X 750 mm
3	900 mm X 1200 mm
4	900 mm X 1200 mm
5	1200 mm X 1500 mm

SIZE	A	B	C	D	E	F	G	H	I	J	K	L	M	N	O	P	Q	R	S	T	U	V	W	X	Y	Z	Area sq. ft.	Area m2
1	18	24	1 1/8	3/8	1/2	3	8	3	2	2	3	7 1/4	5 1/2														3.0	.28
2	24	30	1 1/8	3/8	1/2	4	10	3	2 1/4	3 3/8	3 3/8	9 5/8	7 3/8														5.0	.46
3	36	48	1 3/8	1/2	5/8	6	14	6	5	5	6	14 3/8	11														12.0	1.11
4	36	48	1 3/8	1/2	5/8	6	14	6	5	5	6	14 3/8	11														12.0	1.11
5	48	60	2 1/4	3/4	1	8	20	6	4 1/2	6 3/4	6 3/4	19 1/4	14 5/8														20.0	1.86

STANDARD SIGN
R2-1

WISCONSIN DEPT OF TRANSPORTATION

APPROVED Chester J Spaeg for State Traffic Engineer

DATE 2/01/02 PLATE NO. R2-1.11

STATE PROJECT NUMBER:

SHEET NO: 196 E

FILE NAME : C:\Users\Projects\tr_stdplate\R21.DGN PLOT DATE : 05-APR-2004 07:45 ORG DATE : 6/4/97 Originator : Don Kluever
WISDOT/CADDS SHEET 42

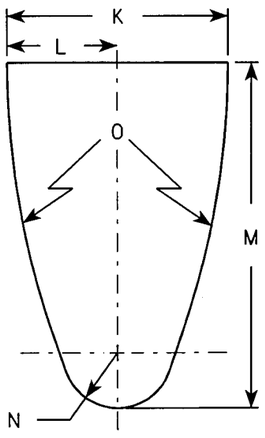

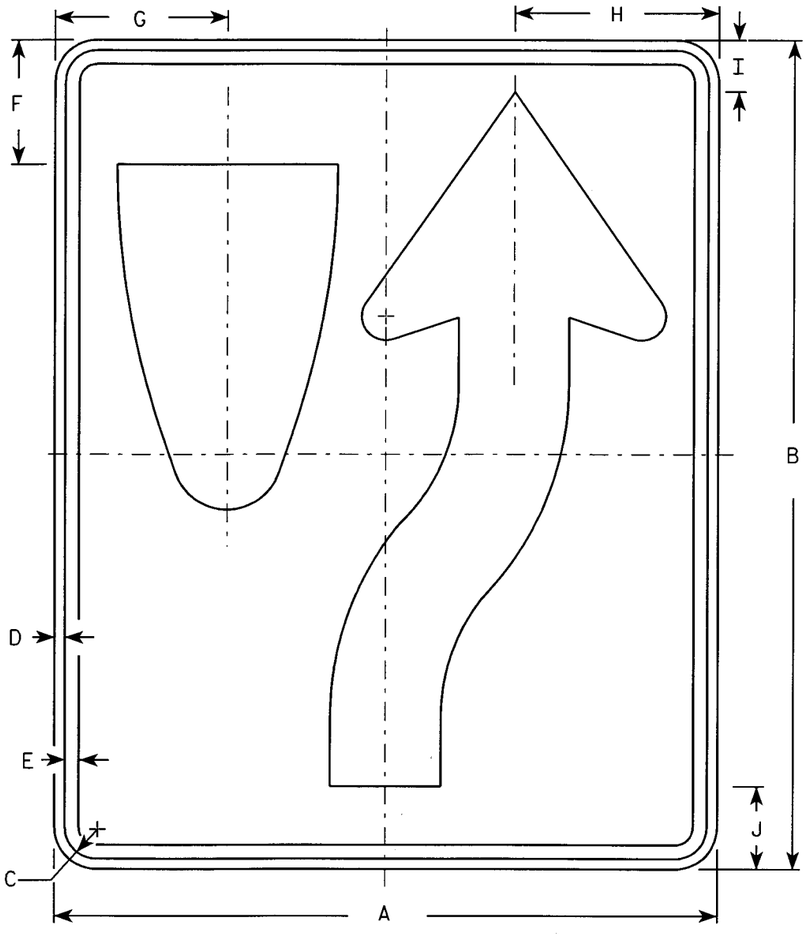

R4-7

NOTES

1. Sign is Type II - Type H Reflective - reference WIS DOT Standard Specification for HIGHWAY and STRUCTURE CONSTRUCTION latest edition. material is plywood but borders shall be rounded
2. Color:
   Background - White
   Message - Black
3. Corners may be square or rounded when base as shown. When base material is metal, the corners and borders shall be rounded.
4. R4-8 is the same as R4-7 except Legend is reversed.

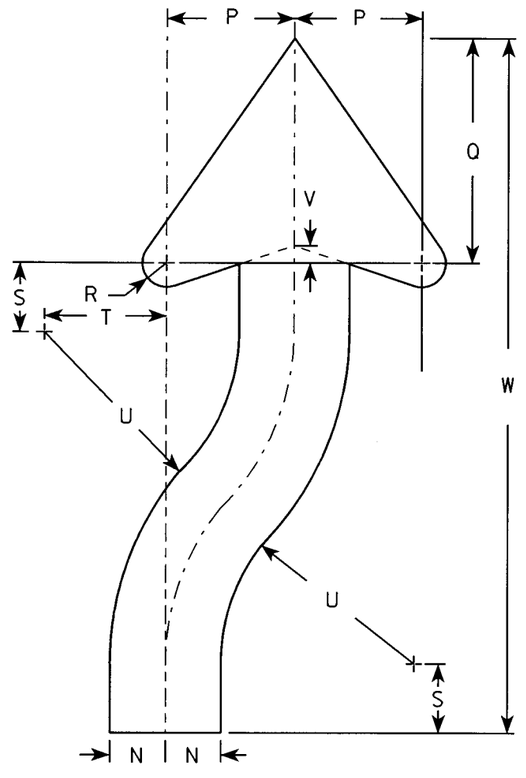

ARROW DETAIL

Metric equivalent for this sign is:

SIZE	
1	450 mm X 600 mm
2	600 mm X 750 mm
3	900 mm X 1200 mm
4	900 mm X 1200 mm
5	900 mm X 1200 mm

SIZE	A	B	C	D	E	F	G	H	I	J	K	L	M	N	O	P	Q	R	S	T	U	V	W	X	Y	Z	Area sq. ft.	Area m2
1	18	24	1 1/8	3/8	1/2	3 3/8	4 3/4	5 1/2	1 3/8	2 1/4	6	3	9 3/8	1 1/2	22 1/2	3 1/2	6 1/8	5/8	1 7/8	3 1/4	6 3/4	1/2	20 3/8				3.0	.27
2	24	30	1 1/8	3/8	1/2	4 1/2	6 1/4	7 3/8	1 7/8	3	8	4	12 1/2	2	30	4 5/8	8 1/8	7/8	2 1/2	4 3/8	9	5/8	25 1/8				5.0	.45
3	36	48	1 3/4	1/2	5/8	6 3/4	9 3/8	11 1/8	2 7/8	4 1/2	12	6	18 3/4	3	45	6 7/8	12 1/4	1 1/4	3 3/4	6 5/8	13 1/2	1	40 3/4				12.0	1.08
4	36	48	1 3/4	1/2	5/8	6 3/4	9 3/8	11 1/8	2 7/8	4 1/2	12	6	18 3/4	3	45	6 7/8	12 1/4	1 1/4	3 3/4	6 5/8	13 1/2	1	40 3/4				12.0	1.08
5	48	60	2 1/4	3/4	1	9	12 1/2	14 3/4	3 3/4	6	16	8	25	4	60	9 1/4	16 1/4	1 5/8	5	8 3/4	18	1 1/4	50 1/4				20.0	1.08

STANDARD SIGN
R4-7 & R4-8

WISCONSIN DEPT OF TRANSPORTATION

APPROVED Chester J Spray for State Traffic Engineer

DATE 2/6/02 PLATE NO. R4-7.7

STATE PROJECT NUMBER:

SHEET NO: 197 E

LEVELS ON - 2,3, 5,6, 10,

50,59,60,61,62,63

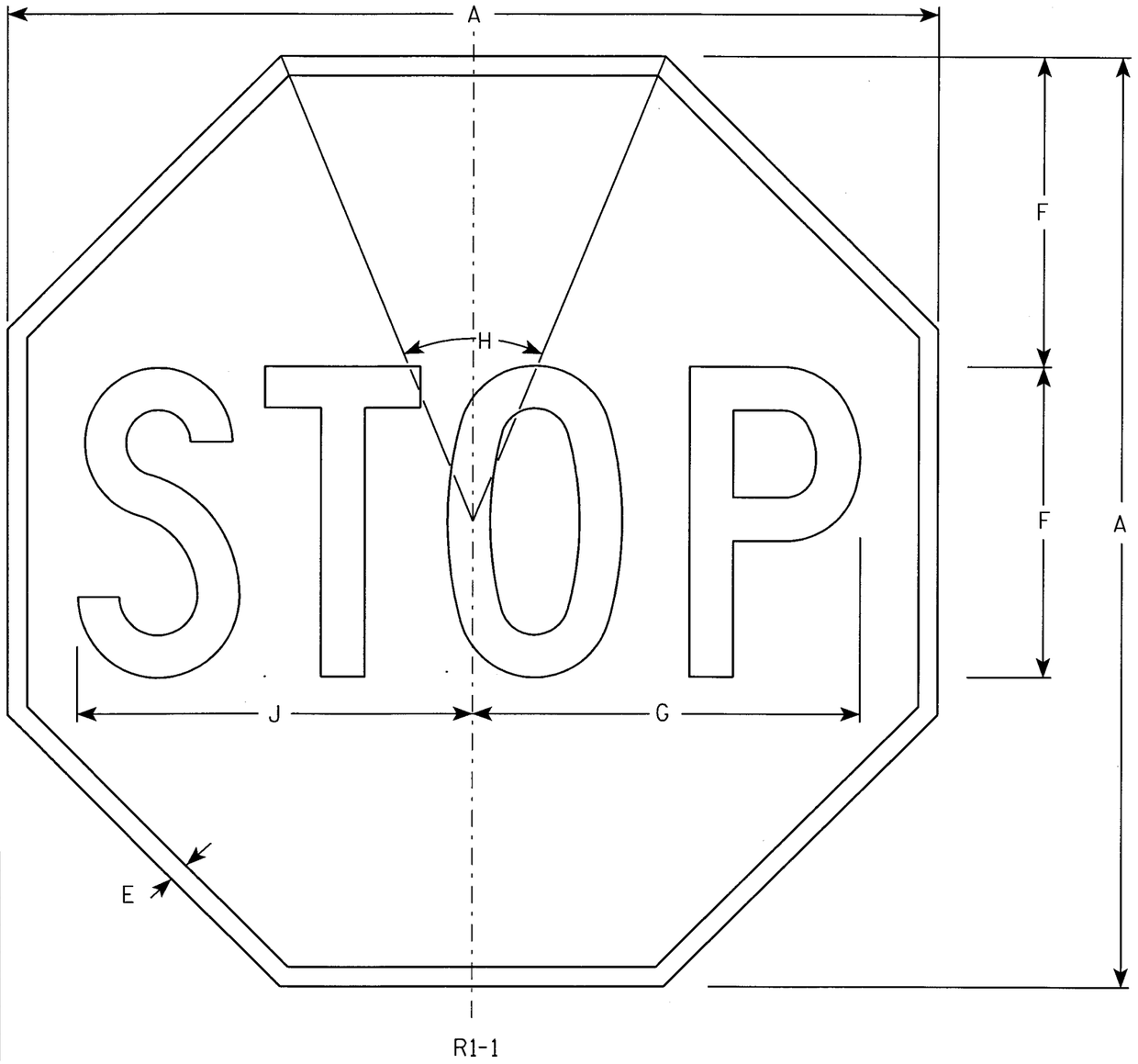

NOTES

1. Sign is Type II - Type H Reflective - reference WIS DOT Standard Specification for HIGHWAY and STRUCTURE CONSTRUCTION latest edition.
2. Color:
   Background - Red
   Message - White
3. Message Series - C

Metric equivalent for this sign is:

SIZE	
1	600 mm X 600 mm
2	750 mm X 750 mm
3	900 mm X 900 mm
4	1200 mm X 1200 mm
5	1200 mm X 1200 mm
6	450 mm X 450 mm
7	300 mm X 300 mm

SIZE	A	B	C	D	E	F	G	H	I	J	K	L	M	N	O	P	Q	R	S	T	U	V	W	X	Y	Z	Area sq. ft.	Area m2
1	24				3/8	8	10	45°		10 1/4																	3.31	0.31
2	30				5/8	10	12 1/2	45°		12 3/4																	5.18	0.48
3	36				3/4	12	15	45°		15 3/8																	7.46	0.69
4	48				1	16	20	45°		20 1/2																	13.25	1.23
5	48				1	16	20	45°		20 1/2																	13.25	1.23
6	18				3/8	6	7 3/4	45°		7 3/4																	1.86	0.17
7	12				1/4	4	5	45°		5 1/8																	0.78	0.07

STANDARD SIGN
R1-1

WISCONSIN DEPT OF TRANSPORTATION

APPROVED Chester J Spang
for State Traffic Engineer

DATE 10/15/98 PLATE NO. R1-1.11

STATE PROJECT NUMBER: | HWY: | COUNTY: | SHEET NO: 198 | E

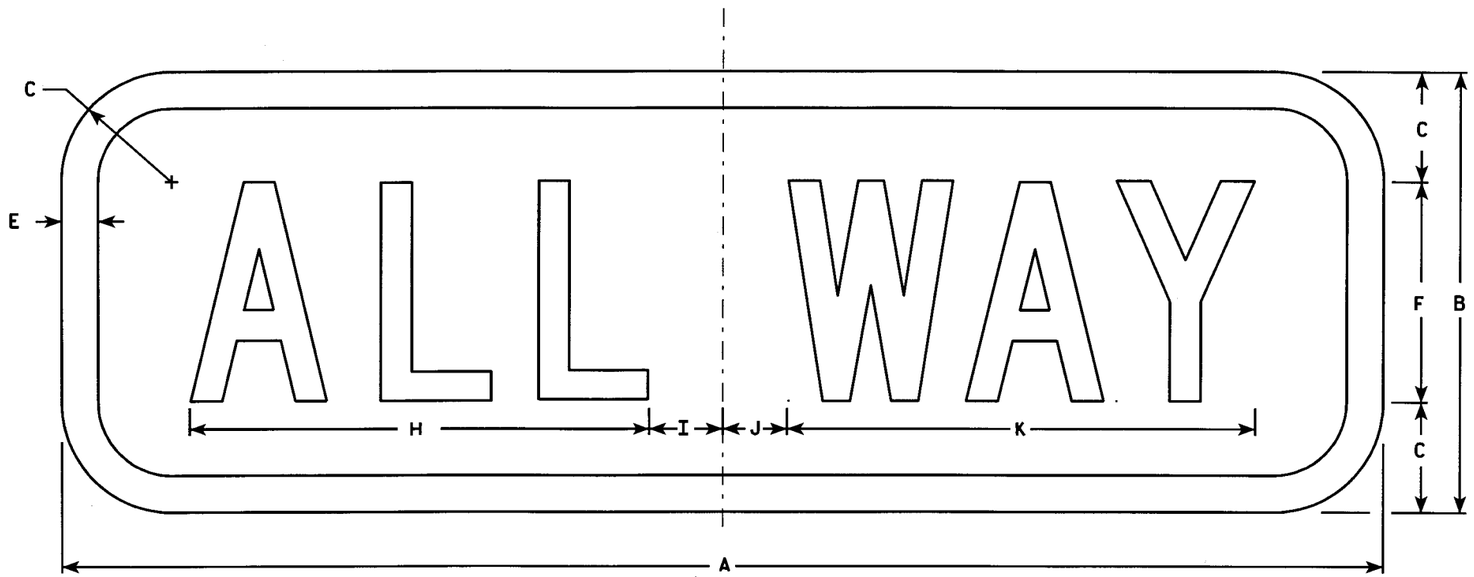

R1-4

NOTES

1. Sign is Type II - Type H Reflective - reference WIS DOT Standard Specification for HIGHWAY and STRUCTURE CONSTRUCTION latest edition.
2. Color:
   Background - Red
   Message - White
3. Message Series - C
4. Corners may be square or rounded when base material is plywood but borders shall be rounded as shown. When base material is metal, the corners and borders shall be rounded.

Metric equivalent for this sign is:

SIZE	
1	450 mm X 150 mm
2	450 mm X 150 mm
3	
4	
5	

SIZE	A	B	C	D	E	F	G	H	I	J	K	L	M	N	O	P	Q	R	S	T	U	V	W	X	Y	Z	Area sq. ft.	Area m2
1	18	6	1 ½		½	3		6 ¼	1 ¼	⅞	6 ⅜																0.75	0.07
2	18	6	1 ½		½	3		6 ¼	1 ¼	⅞	6 ⅜																0.75	0.07
3																												
4																												
5																												

STANDARD SIGN
R1-4

WISCONSIN DEPT OF TRANSPORTATION

APPROVED Chester J Sprague for State Traffic Engineer

DATE 2/4/98 PLATE NO. R1-4.4

SHEET NO: 199 E

LEVELS ON - 2,3, 5,6, 10,

58,59,60, 63

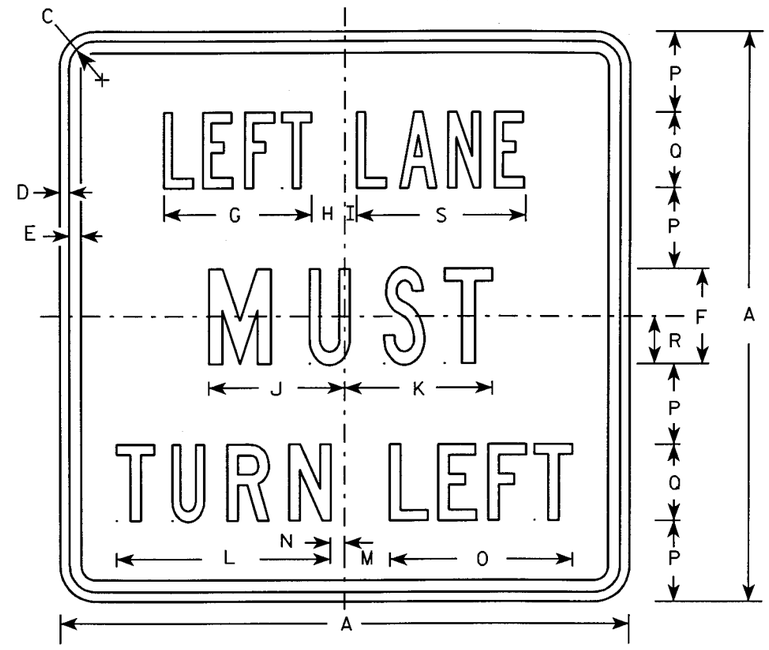

R3-7L

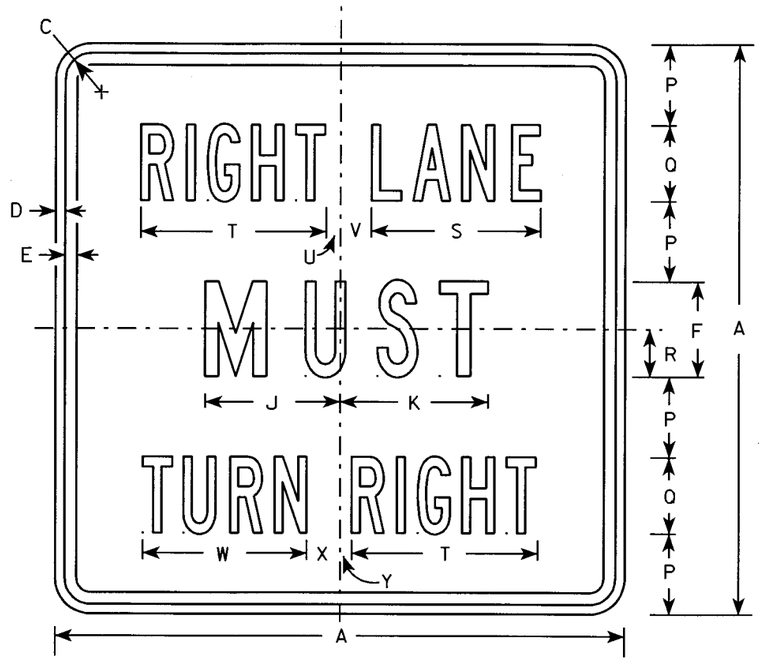

R3-7R

NOTES

1. Sign is Type II - Type H Reflective - reference WIS DOT Standard Specification for HIGHWAY and STRUCTURE CONSTRUCTION latest edition.
2. Color:
   Background - White
   Message - Black
3. Message Series - Line 1 is Series B.
   Line 2 is Series C.
   Line 3 on plate R3-7R is Series B and Series C on plate R3-7L.
4. Corners may be square or rounded when base material is plywood but borders shall be rounded as shown. When base material is metal, the corners and borders shall be rounded.

Metric equivalent for this sign is:

SIZE	
1	750 mm X 750 mm
2	750 mm X 750 mm
3	900 mm X 900 mm
4	1200 mm X 1200 mm
5	

SIZE	A	B	C	D	E	F	G	H	I	J	K	L	M	N	O	P	Q	R	S	T	U	V	W	X	Y	Z	Area sq. ft.	Area m2
1	30		1 3/8	1/2	5/8	5	7 3/4	1 3/4	5/8	7 1/8	7 3/4	11 1/4	2 3/8	3/4	9 5/8	4 1/4	4	2 1/2	8 7/8	9 3/4	3/4	1 5/8	8 5/8	1 5/8	5/8		6.25	0.56
2	30		1 3/8	1/2	5/8	5	7 3/4	1 3/4	5/8	7 1/8	7 3/4	11 1/4	2 3/8	3/4	9 5/8	4 1/4	4	2 1/2	8 7/8	9 3/4	3/4	1 5/8	8 5/8	1 5/8	5/8		6.25	0.56
3	36		1 5/8	5/8	3/4	6	9 5/8	2	1 1/8	8 3/4	9	13 1/2	3 7/8	1 1/2	12 1/2	5	5	3	10 5/8	12	7/8	2 1/4	10 5/8	2 1/8	1		9.00	0.81
4	48		2 1/4	3/4	1	8	13 1/2	2 3/8	1 1/2	11 1/2	11 7/8	17 3/4	3 5/8	2 1/2	16 3/8	6 1/2	7	4	14 3/8	16 7/8	5/8	3 1/4	15 1/8	2 3/4	1 1/8		16.00	1.44
5																												

STANDARD SIGN
R3-7L & R3-7R

WISCONSIN DEPT OF TRANSPORTATION

APPROVED Chester J Spang for State Traffic Engineer

DATE 2/05/02 PLATE NO. R3-7.3

STATE PROJECT NUMBER:

SHEET NO: 200 E

58.59,61,62,63 LEVELS ON · 2.3. 5.6. 10.

R7-1

NOTES

1. Sign is Type II - Type H Reflective - reference WIS DOT Standard Specification for HIGHWAY and STRUCTURE CONSTRUCTION latest edition.
2. Color:
   Background - White
   Message - Red
3. Message Series - See Note 5
4. Corners may be square or rounded when base material is plywood but borders shall be rounded as shown. When base material is metal, the corners and borders shall be rounded.
5. Lines 1, 3 and 4 are series C, line 2 is series B.
6. R7-1D (double arrow)
   R7-1L (left arrow)
   R7-1R (right arrow)

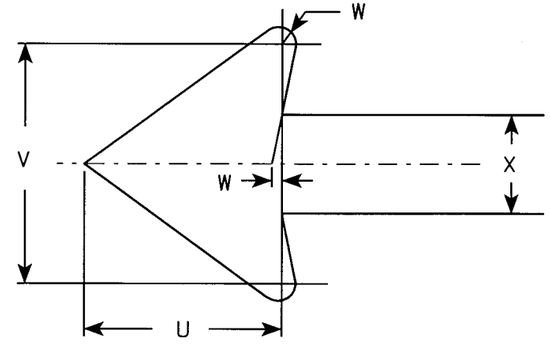

Metric equivalent for this sign is:

SIZE	
1	300 mm X 450 mm
2	450 mm X 600 mm
3	600 mm X 750 mm
4	
5	

SIZE	A	B	C	D	E	F	G	H	I	J	K	L	M	N	O	P	Q	R	S	T	U	V	W	X	Y	Z	Area sq. ft.	Area m2
1	12	18	1 1/8	3/8	3/8	3	1 7/8	2	7/8	5/8	1 1/2	2 1/2	2	2	4 7/8	4 7/8	2 1/4	2 1/8	2 1/2	3 7/8	1 1/2	1 3/4	1/8	3/4			1.5	0.14
2	18	24	1 1/8	3/8	1/2	4	2 1/2	2 1/2	1 1/4	1	2	3 1/4	2 3/4	2 5/8	7 1/8	7	2 3/4	2 5/8	3 1/8	5 7/8	2 1/4	2 5/8	1/4	1 1/8			3.0	0.27
3	24	30	1 1/8	3/8	1/2	5	3	3	2	1 1/4	2 1/2	4	3 1/4	3 3/8	9 1/4	9 1/4	3 1/4	3 1/4	3 3/4	7 3/4	3	3 1/2	1/4	1 1/2			5.0	0.45
4																												
5																												

STANDARD SIGN
R7-1

WISCONSIN DEPT OF TRANSPORTATION

APPROVED Chester J Spang
for State Traffic Engineer

DATE 2/7/02 PLATE NO. R7-1.8

STATE PROJECT NUMBER:

SHEET NO: 20 E

LEVELS ON - 2,3, 5,6, 10,
56,59,60,61,62,63

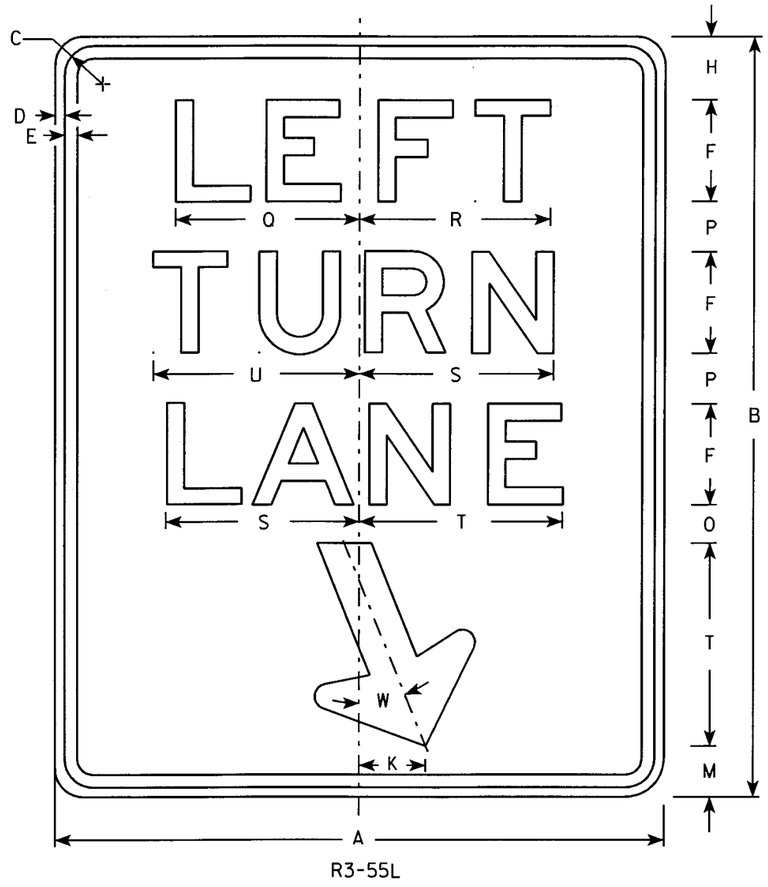

R3-55L

NOTES

1. Sign is Type II - Type H Reflective - reference WIS DOT Standard Specification for HIGHWAY and STRUCTURE CONSTRUCTION latest edition.
2. Color:
   Background - White
   Message - Black
3. Message Series - E
4. Corners may be square or rounded when base material is plywood but borders shall be rounded as shown. When base material is metal, the corners and borders shall be rounded.

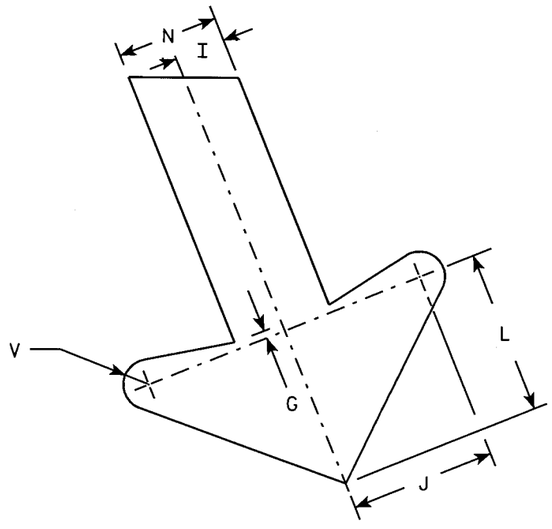

ARROW DETAIL

Metric equivalent for this sign is:

SIZE	
1	
2	600 mm X 750 mm
3	900 mm X 1200 mm
4	
5	

SIZE	A	B	C	D	E	F	G	H	I	J	K	L	M	N	O	P	Q	R	S	T	U	V	W	X	Y	Z	Area sq. ft.	Area m2
1																												
2	24	30	1 1/8	3/8	1/2	4	1/4	2 1/2	1	2 7/8	2 5/8	3 1/4	2	2	1 1/2	2	7 1/4	7 1/2	7 5/8	8	8 1/8	1/2	22°				5.0	0.45
3	36	48	1 3/4	1/2	5/8	6	3/8	4 1/4	1 1/2	4 1/4	4	4 7/8	3 1/4	3	3	3 3/4	10 7/8	11 1/4	11 1/2	12	12 1/4	3/4	22°				12.0	1.08
4																												
5																												

STANDARD SIGN
R3-55L

WISCONSIN DEPT OF TRANSPORTATION

APPROVED Chester J Spang for State Traffic Engineer

DATE 2/05/02 PLATE NO. R3-55L.5

STATE PROJECT NUMBER:

SHEET NO: 202 E

FILE NAME : C:\Users\Projects\tr_stdplate\R355L.DGN PLOT DATE : 05-APR-2004 07:49 ORG DATE : 4/18/98 Originator : Don Kluever

WISDOT/CADDS SHEET 42

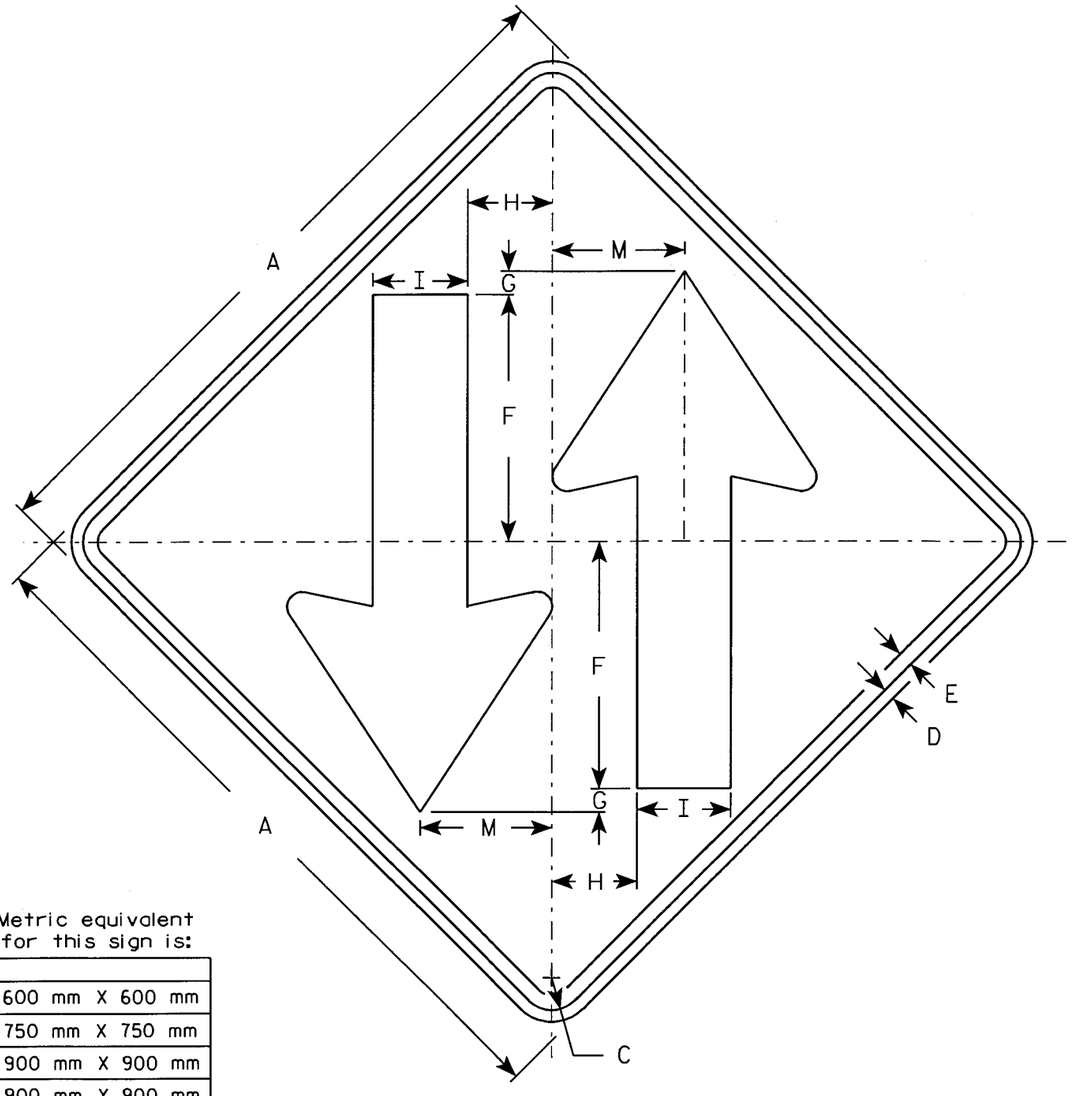

W6-3

NOTES

1. Sign is Type II - Type H Reflective - reference WIS DOT Standard Specification for HIGHWAY and STRUCTURE CONSTRUCTION latest edition.
2. Color:
   Background - Yellow
   Message - Black
3. Corners may be square or rounded when base material is plywood but borders shall be rounded as shown. When base material is metal, the corners and borders shall be rounded.

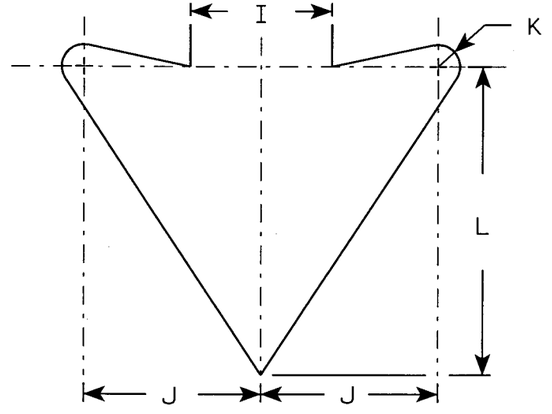

ARROW DETAIL

Metric equivalent for this sign is:

SIZE	
1	600 mm X 600 mm
2	750 mm X 750 mm
3	900 mm X 900 mm
4	900 mm X 900 mm
5	1200 mm X 1200 mm

SIZE	A	B	C	D	E	F	G	H	I	J	K	L	M	N	O	P	Q	R	S	T	U	V	W	X	Y	Z	Area sq. ft.	Area m2
1	24		1 1/8	3/8	1/2	8 1/8	1	2	3	4	1/2	7	3 1/2														4.0	0.36
2	30		1 3/8	1/2	5/8	10 1/2	1	3 5/8	4	5	5/8	8 3/4	5 5/8														6.25	0.56
3	36		1 5/8	5/8	3/4	12	1	4 1/4	5	6	3/4	10 1/2	6 3/4														9.0	0.81
4	36		1 5/8	5/8	3/4	12	1	4 1/4	5	6	3/4	10 1/2	6 3/4														9.0	0.81
5	48		2 1/4	3/4	1	15 1/2	1	6	6	8	1	14	9														16.0	1.44

STANDARD SIGN
W6-3

WISCONSIN DEPT OF TRANSPORTATION

APPROVED Chester J Spaeg for State Traffic Engineer

DATE 01/15/02 PLATE NO. W6-3.7

STATE PROJECT NUMBER: | HWY: | COUNTY: | SHEET NO: 203 | E

FILE NAME : C:\Users\Projects\tr_stdplate\W63.DGN PLOT DATE : 05-APR-2004 07:51 ORG DATE : PLOT NAME : Originator : Artie Noll PLOT SCALE : 6.445313:1.000000 WISDOT/CADDS SHEET 42

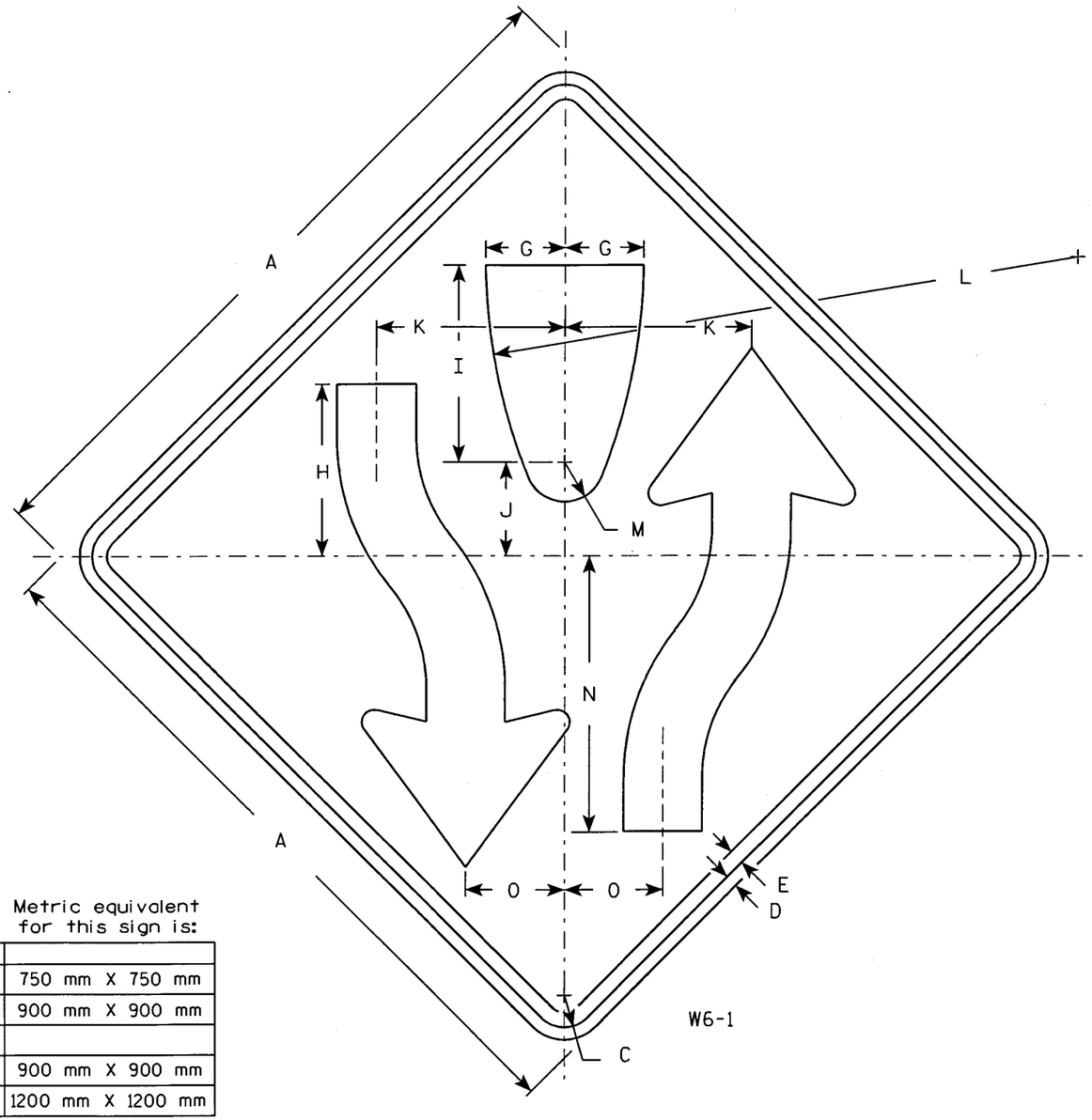

NOTES

1. Sign is Type II - Type H Reflective - reference WIS DOT Standard Specification for HIGHWAY and STRUCTURE CONSTRUCTION latest edition.
2. Color:
   Background - Yellow
   Message - Black
3. Corners may be square or rounded when base material is plywood but borders shall be rounded as shown. When base material is metal, the corners and borders shall be rounded.
4. W6-2 same as W6-1 but is rotated 180° when mounted.

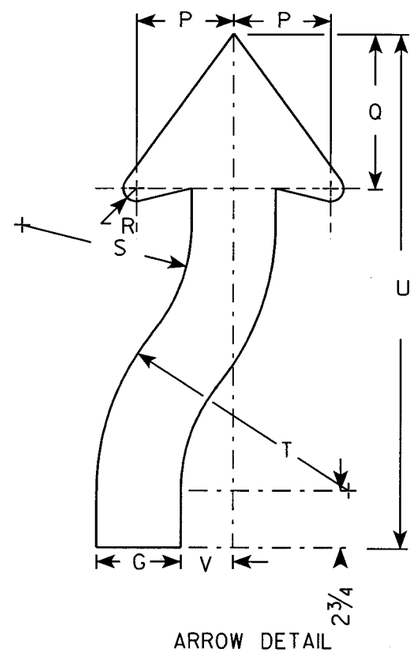

ARROW DETAIL

Metric equivalent for this sign is:

SIZE	
1	750 mm X 750 mm
2	900 mm X 900 mm
3	
4	900 mm X 900 mm
5	1200 mm X 1200 mm

SIZE	A	B	C	D	E	F	G	H	I	J	K	L	M	N	O	P	Q	R	S	T	U	V	W	X	Y	Z	Area sq. ft.	Area m2
1	30		1 3/8	1/2	5/8		3 1/4	8	8 1/4	4 1/8	7 7/8	25	1 3/4	11 5/8	4 1/8	3 7/8	6 3/4	5/8	6 5/8	9 7/8	21 5/8	2					6.25	0.56
2	36		1 5/8	5/8	3/4		4	8 3/4	10	4 3/4	9 1/2	30	2	14	5	4 5/8	7 3/8	7/8	8	12	24 1/2	2 1/2					9.0	0.81
3																												
4	36		1 5/8	5/8	3/4		4	8 3/4	10	4 3/4	9 1/2	30	2	14	5	4 5/8	7 3/8	7/8	8	12	24 1/2	2 1/2					9.0	0.81
5	48		2 1/4	3/4	1		5 3/8	11 5/8	13 3/8	6 3/8	12 5/8	40	2 5/8	18 5/8	6 5/8	6 1/4	9 7/8	1 1/4	10 5/8	16	32 5/8	3 3/8					16.0	1.44

STANDARD SIGN
W6-1 & W6-2

WISCONSIN DEPT OF TRANSPORTATION

APPROVED Chester J Spaze for State Traffic Engineer

DATE 01/15/02 PLATE NO. W6-1.11

STATE PROJECT NUMBER: | HWY: | COUNTY: | SHEET NO: 204 | E

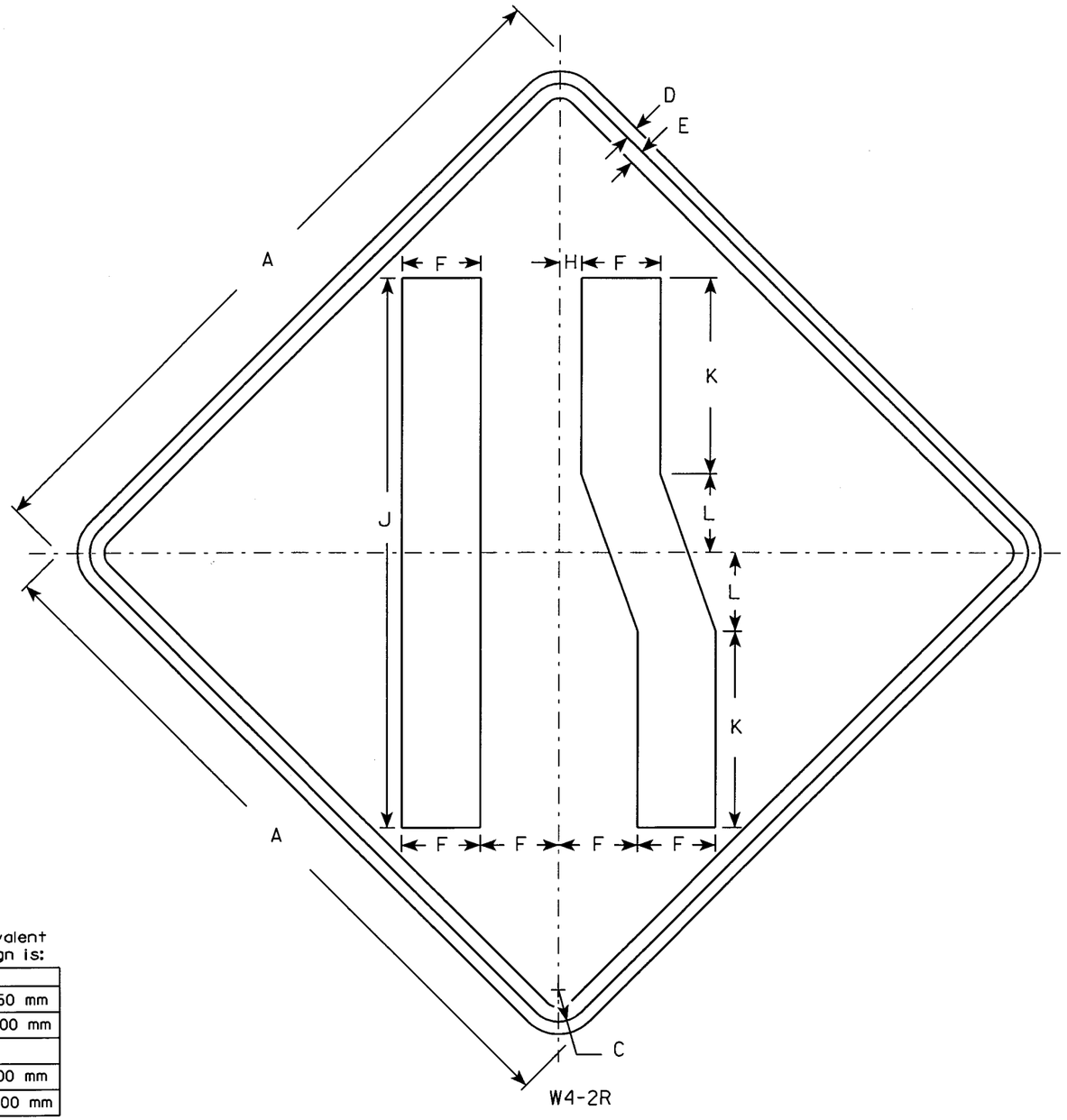

NOTES

1. Sign is Type II - Type H Reflective - reference WIS DOT Standard Specification for HIGHWAY and STRUCTURE CONSTRUCTION latest edition.
2. Color:
   Background - Yellow
   Message - Black
3. Corners may be square or rounded when base material is plywood but borders shall be rounded as shown. When base material is metal, the corners and borders shall be rounded.
4. W4-2L is the same as W4-2R except the arrow is reversed along the vertical centerline.

Metric equivalent for this sign is:

SIZE	
1	750 mm X 750 mm
2	900 mm X 900 mm
3	
4	900 mm X 900 mm
5	1200 mm X 1200 mm

SIZE	A	B	C	D	E	F	G	H	I	J	K	L	M	N	O	P	Q	R	S	T	U	V	W	X	Y	Z	Area sq. ft.	Area m2
1	30		1 3/8	1/2	5/8	3		7/8		23	8 1/4	3 1/4															6.25	0.56
2	36		1 5/8	5/8	3/4	4		1 1/8		28	10	4															9.0	0.81
3																												
4	36		1 5/8	5/8	3/4	4		1 1/8		28	10	4															9.0	0.81
5	48		2 1/4	3/4	1	5		1 1/2		37	13 1/4	5 1/4															16.0	1.44

STANDARD SIGN
W4-2

WISCONSIN DEPT OF TRANSPORTATION

APPROVED Charles J Spay for State Traffic Engineer

DATE 7/7/97 PLATE NO. W4-2.9

SHEET NO: 205 E

57.58.59.60.61.62.63

LEVELS ON - 2.3. 5.6. 10.

FILE NAME : C:±Users±Projects±tr_stdplate±W42.DGN PLOT DATE: 05-APR-2004 07:54 ORG DATE : 7/7/97 Originator : Don Kluever

WISDOT/CADDS SHEET 42

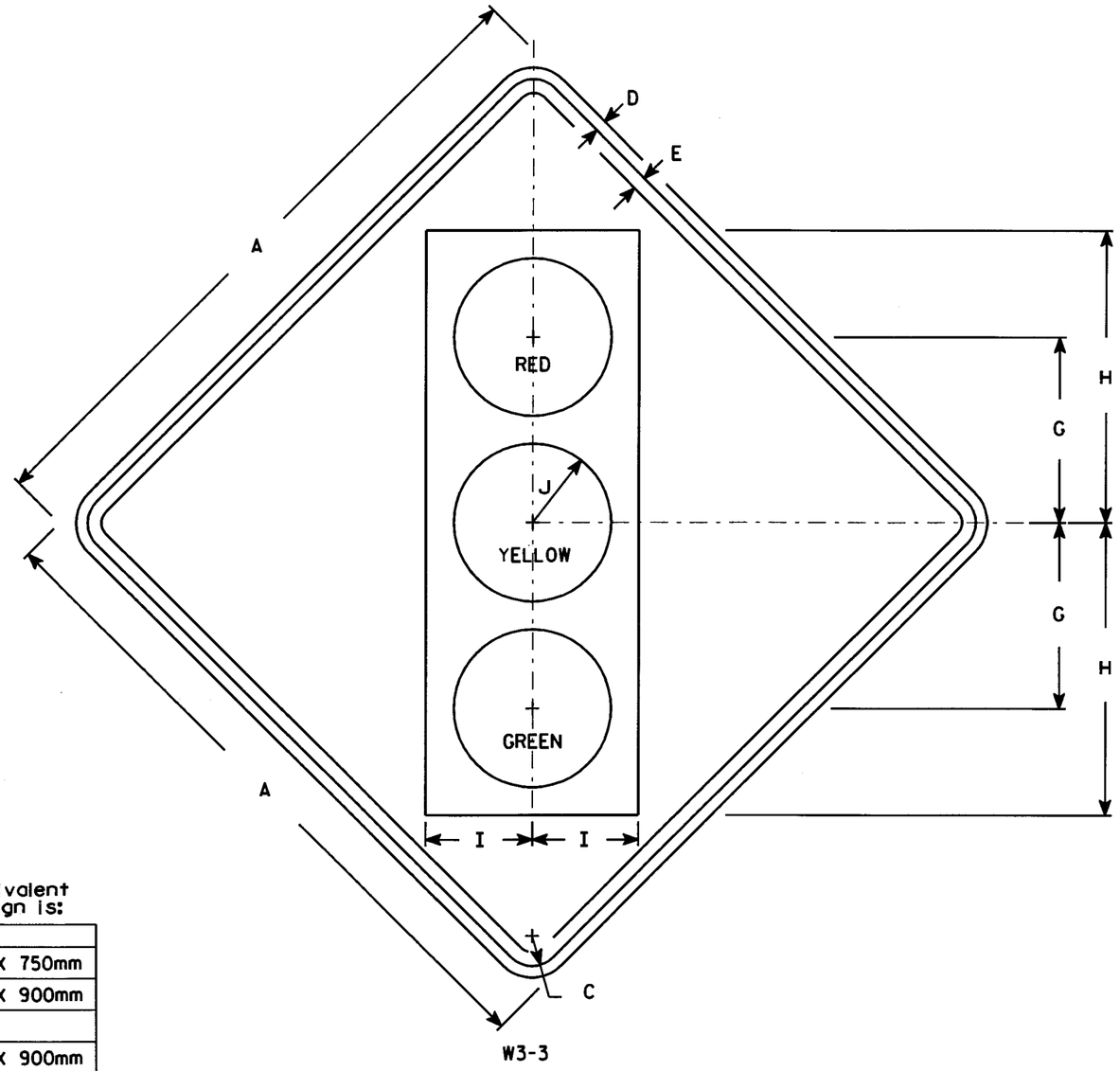

W3-3

Metric equivalent for this sign is:

SIZE	
1	750mm X 750mm
2	900mm X 900mm
3	
4	900mm X 900mm
5	1200mm X 1200mm

NOTES

1. Sign is Type II - Type H Reflective - reference WIS DOT Standard Specification for HIGHWAY and STRUCTURE CONSTRUCTION latest edition.
2. Color:
   Background - Yellow
   Message - See Note 4
3. Corners may be square or rounded when base material is plywood but borders shall be rounded as shown. When base material is metal, the corners and borders shall be rounded.
4. Symbol and border are non-reflective black.
   Top circle - Type H Reflectorized Red
   Center circle - Same as background
   Bottom circle - Type H Reflectorized Green

SIZE	A	B	C	D	E	F	G	H	I	J	K	L	M	N	O	P	Q	R	S	T	U	V	W	X	Y	Z	Area sq. ft.	Area m2
1	30		1 3/8	1/2	5/8		8 3/4	13 3/4	5	3 3/4																	6.25	0.56
2	36		1 5/8	5/8	3/4		10	15 3/4	5 3/4	4 1/4																	9.0	0.81
3																												
4	36		1 5/8	5/8	3/4		10	15 3/4	5 3/4	4 1/4																	9.0	0.81
5	48		2 1/4	3/4	1		12 1/2	20	7 1/2	5																	16.0	1.44

STANDARD SIGN
W3-3

WISCONSIN DEPT OF TRANSPORTATION

APPROVED Charles J Spang for State Traffic Engineer

DATE 01/14/02 PLATE NO. W3-3.7

STATE PROJECT NUMBER:	HWY:	COUNTY:			SHEET NO: 206	E

FILE NAME : C:\Users\Projects\tr_stdplate\W33.DGN PLOT DATE : 05-APR-2004 07:54 ORG DATE : PLOT NAME : Originator : Artie Noll PLOT SCALE : 7.734375:1.000000

WISDOT/CADDS SHEET 42

50.59.60. 63

LEVELS ON - 1,2,3, 5,6, 10.

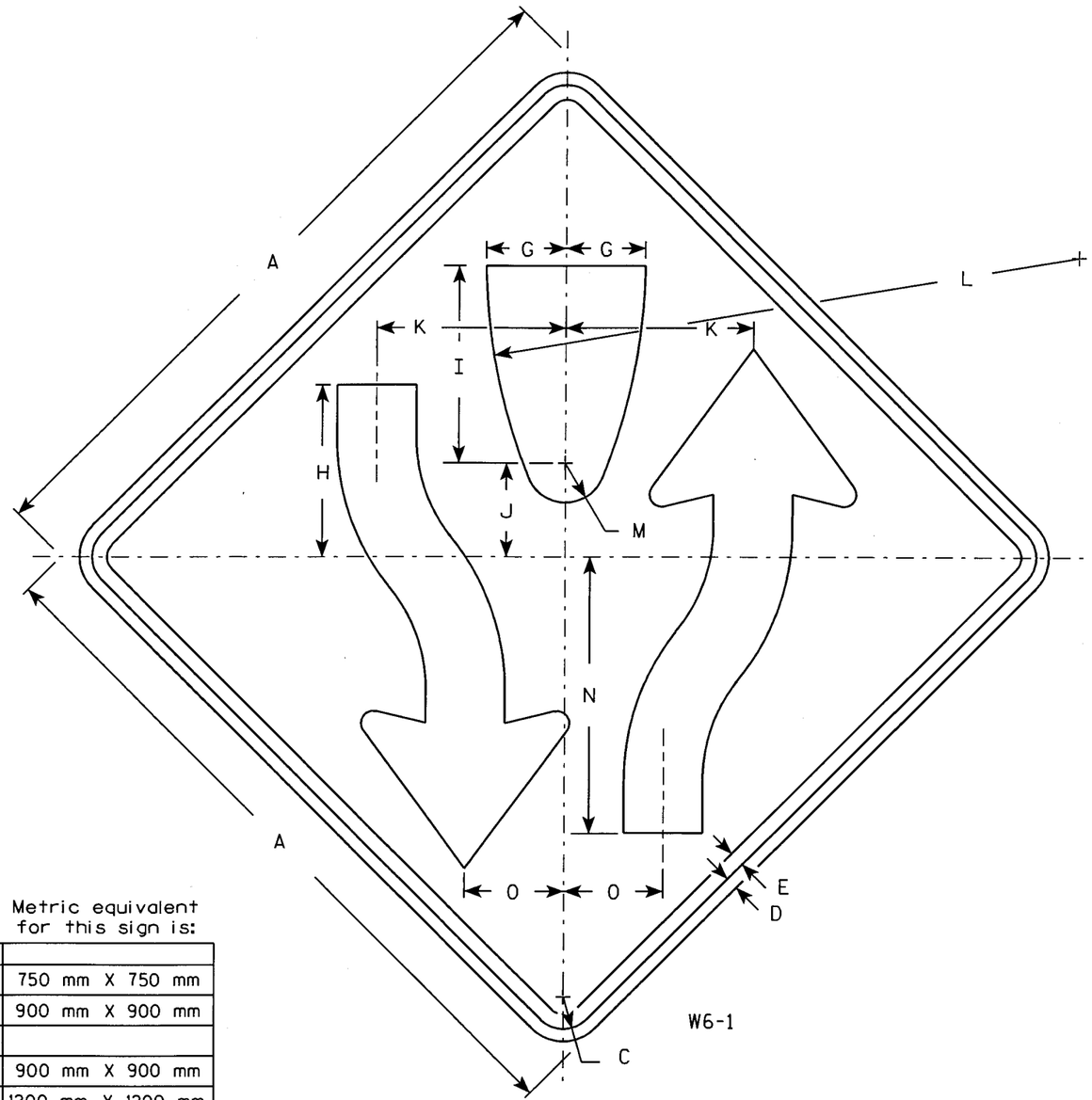

W6-1

Metric equivalent for this sign is:

SIZE	
1	750 mm X 750 mm
2	900 mm X 900 mm
3	
4	900 mm X 900 mm
5	1200 mm X 1200 mm

NOTES

1. Sign is Type II - Type H Reflective - reference WIS DOT Standard Specification for HIGHWAY and STRUCTURE CONSTRUCTION latest edition.
2. Color:
   Background - Yellow
   Message - Black
3. Corners may be square or rounded when base material is plywood but borders shall be rounded as shown. When base material is metal, the corners and borders shall be rounded.
4. W6-2 same as W6-1 but is rotated 180° when mounted.

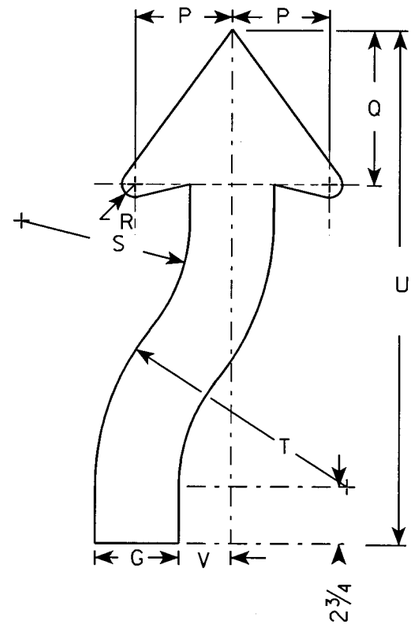

ARROW DETAIL

SIZE	A	B	C	D	E	F	G	H	I	J	K	L	M	N	O	P	Q	R	S	T	U	V	W	X	Y	Z	Area sq. ft.	Area m2
1	30		1 3/8	1/2	5/8		3 1/4	8	8 1/4	4 1/8	7 7/8	25	1 3/4	11 5/8	4 1/8	3 7/8	6 3/4	5/8	6 5/8	9 7/8	21 5/8	2					6.25	0.56
2	36		1 5/8	5/8	3/4		4	8 3/4	10	4 3/4	9 1/2	30	2	14	5	4 5/8	7 3/8	7/8	8	12	24 1/2	2 1/2					9.0	0.81
3																												
4	36		1 5/8	5/8	3/4		4	8 3/4	10	4 3/4	9 1/2	30	2	14	5	4 5/8	7 3/8	7/8	8	12	24 1/2	2 1/2					9.0	0.81
5	48		2 1/4	3/4	1		5 3/8	11 5/8	13 3/8	6 3/8	12 5/8	40	2 5/8	18 5/8	6 5/8	6 1/4	9 7/8	1 1/4	10 5/8	16	32 5/8	3 3/8					16.0	1.44

STANDARD SIGN
W6-1 & W6-2

WISCONSIN DEPT OF TRANSPORTATION

APPROVED Chester J Spray for State Traffic Engineer

DATE 01/15/02 PLATE NO. W6-1.11

STATE PROJECT NUMBER: | HWY: | COUNTY: | SHEET NO: 207 | E

FILE NAME : C:\Users\Projects\tr_stdplate\W61.DGN | PLOT DATE : 05-APR-2004 07:55 | ORG DATE : | PLOT NAME : | Originator : Artie Noll | PLOT SCALE : 7.218750:1.000000

WISDOT/CADDS SHEET 42

LEVELS ON - 1,2,3, 5,6, 10.

57,58,59,63

district contact:

STATE PROJECT NUMBER	SHEET NO.
6999-10-75	

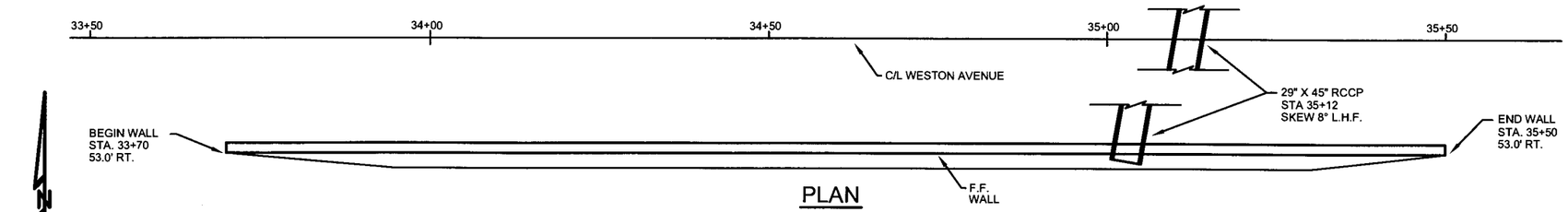

PLAN

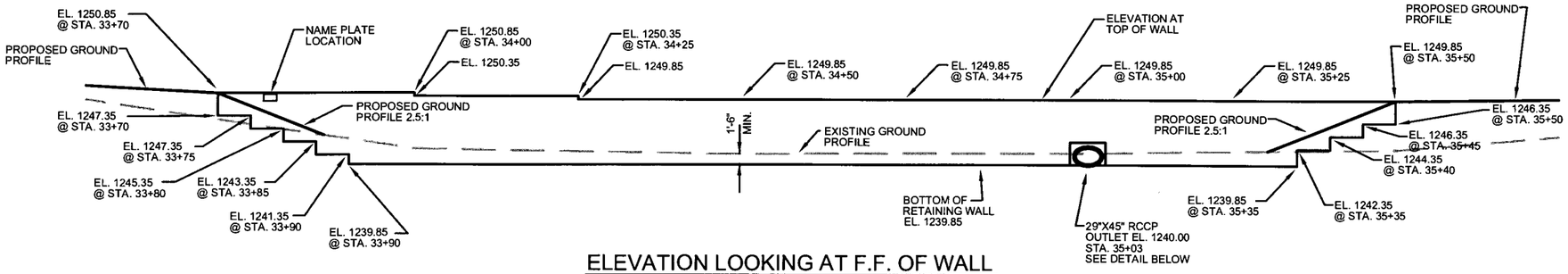

ELEVATION LOOKING AT F.F. OF WALL

DESIGN DATA

THE CONTRACTOR SHALL PROVIDE COMPLETE DESIGN, PLANS, DETAILS, SPECIFICATIONS, AND SHOP DRAWINGS FOR THE RETAINING WALLS IN ACCORDANCE WITH THE SPECIAL PROVISIONS. THE RETAINING WALL MANUFACTURER SHALL PROVIDE TECHNICAL ASSISTANCE TO THE CONTRACTOR DURING CONSTRUCTION. THE COST OF FURNISHING THESE ITEMS SHALL BE INCLUDED IN THE BID ITEM "MECHANICALLY STABILIZED EARTH MODULAR BLOCK WALL, R-37-34".

PLANS, ELEVATIONS AND DETAILS SHOWN ON THESE DRAWINGS ARE INTENDED TO INDICATE WALL LOCATIONS, LENGTHS, HEIGHTS, AND DETAILS COMMON TO THE WALL SYSTEM SELECTED. THE CONTRACTOR SHALL VERIFY THAT THE WALL SYSTEM SELECTED WILL CONFORM TO THE REQUIRED ALIGNMENTS AND DETAILS.

THE RETAINING WALL IS TO BE DESIGNED USING THE ELEVATIONS GIVEN ON THIS SHEET.

DESIGN FOR RETAINING WALL TO PROVIDE FOR FINISHED GRADE SLOPED BEHIND WALL AS SHOWN.

SEE SPECIAL PROVISIONS FOR AESTHETIC TREATMENT TO WALL.

THE MAXIMUM VALUE OF THE ANGLE OF INTERNAL FRICTION OF THE WALL BACKFILL MATERIAL IN THE REINFORCED ZONE SHALL BE ASSUMED TO BE 30° WITHOUT CERTIFIED TEST VALUES.

ALLOWABLE WALL SYSTEMS

MSE MODULAR BLOCK WALL

TOTAL ESTIMATED QUANTITIES

EXCAVATION FOR STRUCTURES RETAINING WALLS (STRUCTURE) R-37-34	1 L.S.
MSE MODULAR BLOCK WALL	1685 S.F.
RAILING TUBULAR SPECIAL (STRUCTURE) R-37-34	1 L.S.

SAFETY FACTORS

MINIMUM DOT STANDARD	MSE MODULAR BLOCK WALL
SLIDING (FS>1.5)	
OVERTURNING (FS>2.0)	
GLOBAL STABILITY (FS>1.3)	
ULTIMATE BEARING CAPACITY (FS>2) BASED ON WALL WIDTHS & IMBEDMENT DEPTHS SHOWN IN TABLE	4000 LBS/SF
MINIMUM WALL WIDTH	0.7 x H OR 6 FT.
MINIMUM WALL EMBEDMENT	1.5 FT.

SOIL PARAMETERS

STRATUM LOCATIONS & SOIL DESCRIPTIONS	UNIT WEIGHT (pcf)	FRICTION ANGLE (DEGREES)	COHESION (psf)
(SOIL TYPE) WALL IN-FILL	120	34	0
(SOIL TYPE)			0
(SOIL TYPE)			0
RETAINED SOIL EL. 1240.0 - EL. 1250.0*	120	30	0

* DESIGN WALL FOR THESE VALUES

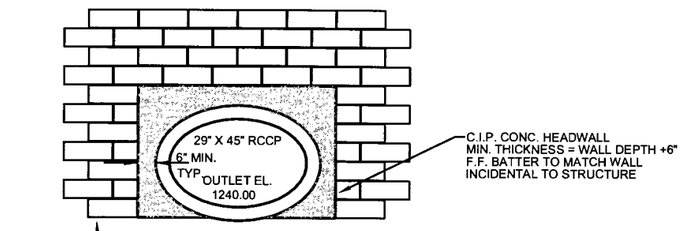

CULVERT OPENING DETAIL

(LOOKING NORTH)

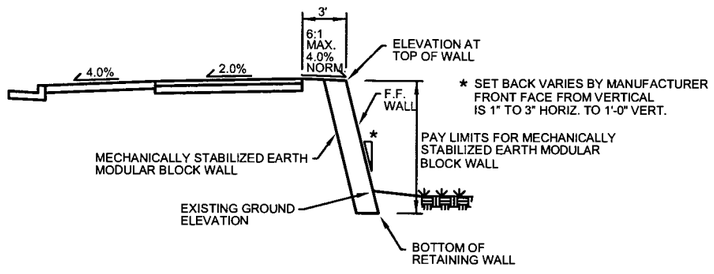

TYPICAL CROSS SECTION OF RETAINING WALL

(LOOKING EAST)

GENERAL NOTES

DRAWINGS SHALL NOT BE SCALED.

LIST OF DRAWINGS

1. MSE MODULAR BLOCK WALL
2. SUBSURFACE [illegible] LOCATIONS
3. TUBULAR RAILING PEDESTRIAN

WISCONSIN
RICHARD A. MARTENS, JR.
E-22693
REGISTERED PROFESSIONAL ENGINEER
4/7/04
ORIGINAL PLANS PREPARED BY CENTRAL WISCONSIN ENGINEERS & ARCHITECTS, INC.

NO.	DATE	REVISION	BY

STATE OF WISCONSIN
DEPARTMENT OF TRANSPORTATION
STRUCTURES DESIGN SECTION

STRUCTURE R-37-34

RETAINING WALL ALONG WESTON AVENUE

COUNTY MARATHON		~~TOWN/CITY~~/VILLAGE WESTON	
DESIGN SPEC. AASHTO 2002	LOAD ——	CONST. SPEC. 2003	
DESIGNED BY R.A.M.	DESIGN CK'D. ——	DRAWN BY A.LEE	PLANS CK'D.

APPROVED Fern Hartbrad SDR 4-07-04
CHIEF STRUCTURAL DESIGN ENGINEER — DATE

MSE MODULAR BLOCK WALL 208

SHEET 1 OF 3

DATE: NOV. 2003

I.D.

P:\DRAFT\32290200 DOT WESTON AVE\RET WALL.dwg, Model, 04/01/2004 10:21:03 AM

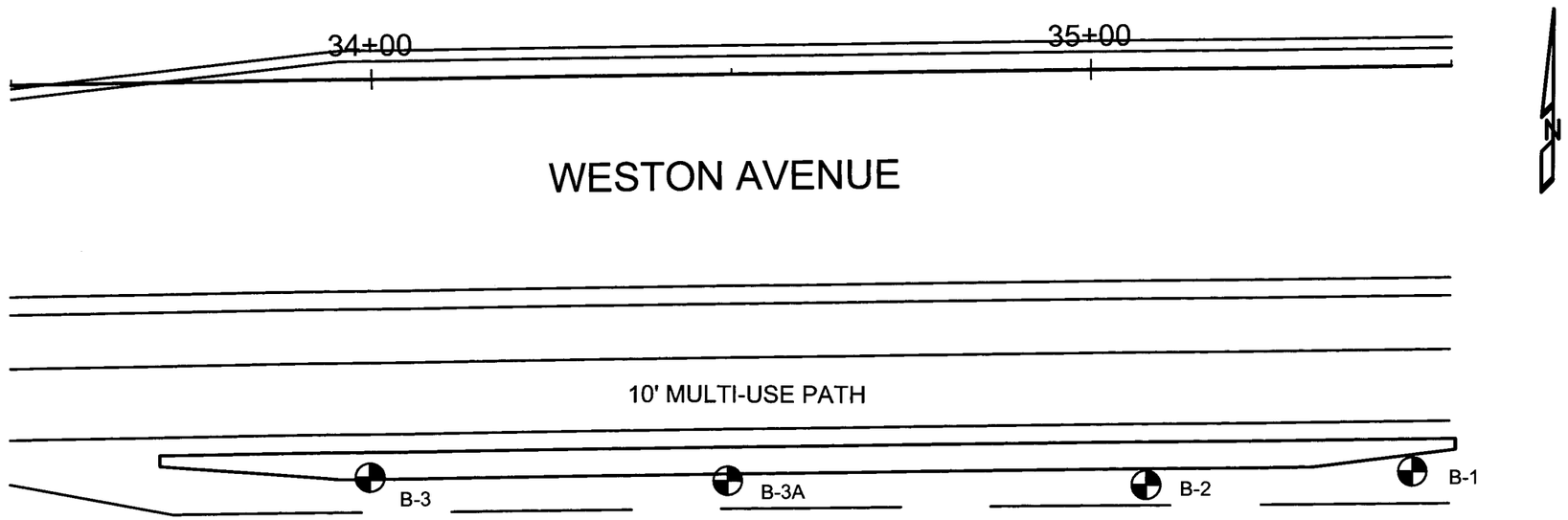

BORINGS AND SUBSURFACE REPORT BY:
BOART LONGYEAR COMPANY
101 ALDERSON STREET
SCHOFIELD, WI. 54476
NOV. 4, 2003

PLANS PREPARED BY:
CENTRAL WISCONSIN ENGINEERS AND ARCHITECTS, INC.
5707 SCHOFIELD AVE., P.O. BOX 107
WESTON, WI 54476

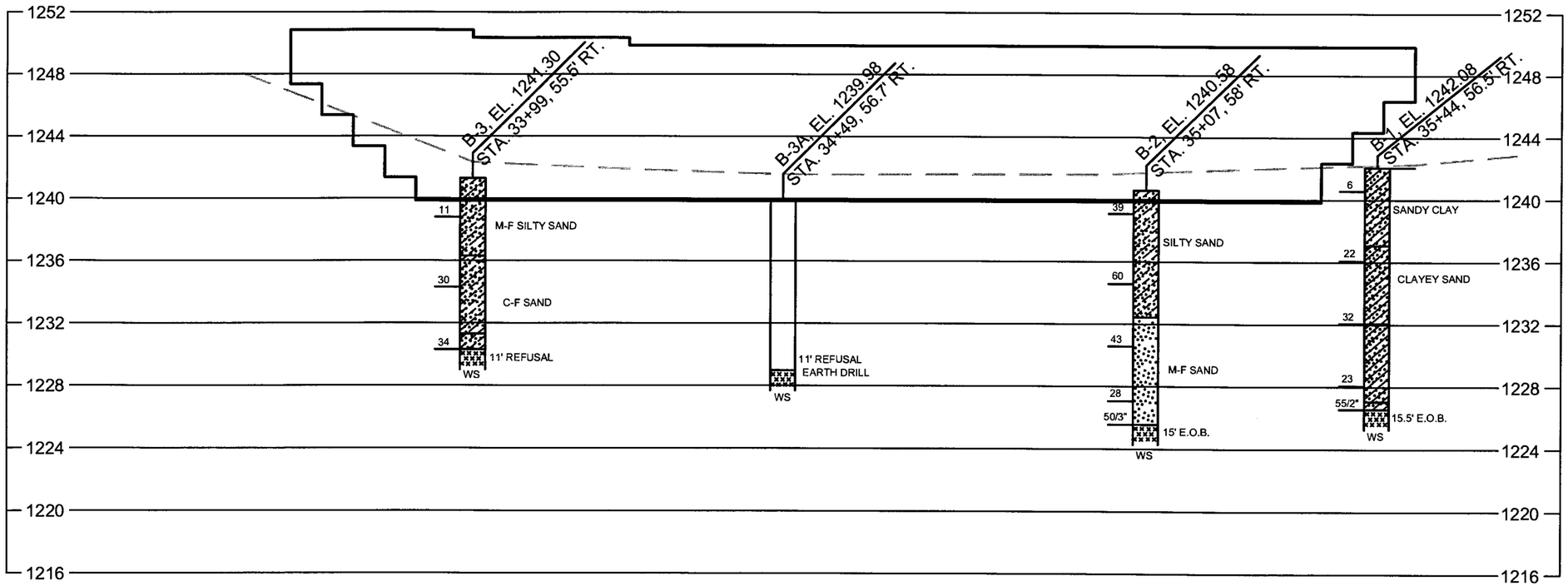

STATE PROJECT NUMBER	SHEET NO.
6999-10-75	

ABBREVIATIONS
F — Fine M — Medium C — Coarse
Ws — Weathered So — Sound

MATERIAL SYMBOLS
Topsoil, Silt, Sandstone
Sand, Peat, Limestone
Gravel, Clay, Igneous Rock

LEGEND OF PROBING

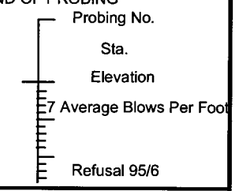

LEGEND OF BORING

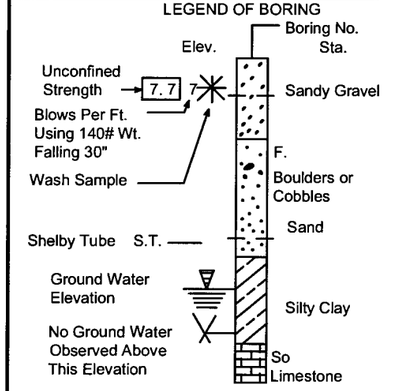

Unless otherwise specified,the blows per foot at the locations indicated are based on driving a O.D.x1. 4" I.D. split spoon sampler with a 140# hammer having a free fall of 30". The blow count is taken in undisturbed soil immediately below a cased or open hole eliminating side friction on the drive pipe.

SUBSURFACE EXPLORATION FOR FOUNDATION DESIGN AND BIDDERS INFORMATION

To obtain relative data concerning the character of material in and upon which the foundation might be built, borings and/or soundings were made at points approximately as indicated on this drawing. The data presented herein represents the findings of the subsurface explorations made. However,because the depths investigated are limited and the area of the borings and/or soundings is very small in relation to the entire area,the Division of Highways does not warrant conditions below the depths investigated or that the classification of material encountered in these investigations is necessarily typical of the entire site.

NO.	DATE	REVISION	BY

STATE OF WISCONSIN
DEPARTMENT OF TRANSPORTATION
STRUCTURES DESIGN SECTION

STRUCTURE R-37-34

CONST. SPEC.	DRAWN BY	PLANS CK'D.
WI 03	A.LEE	

SUBSURFACE EXPLORATION 209

SHEET 2 OF 3

DATE: NOV. 2003

P:\DRAFT\32290200 DOT WESTON AVE\Geological.dwg, Model, 04/02/2004 01:36:58 PM

district contact:

STATE PROJECT NUMBER	SHEET NO.
6999-10-75	

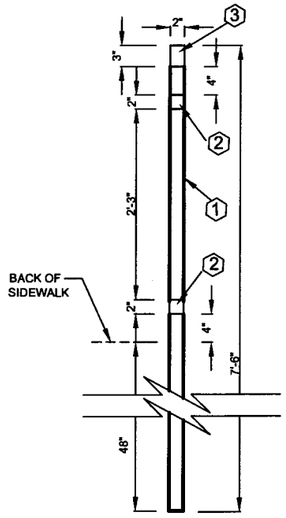

SECTION A-A
THROUGH RAILING

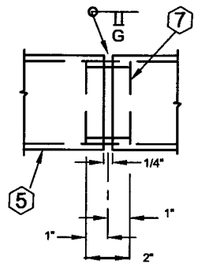

SHOP RAIL SPLICE DETAIL

(LOCATION MUST BE SHOWN ON SHOP DRAWINGS)

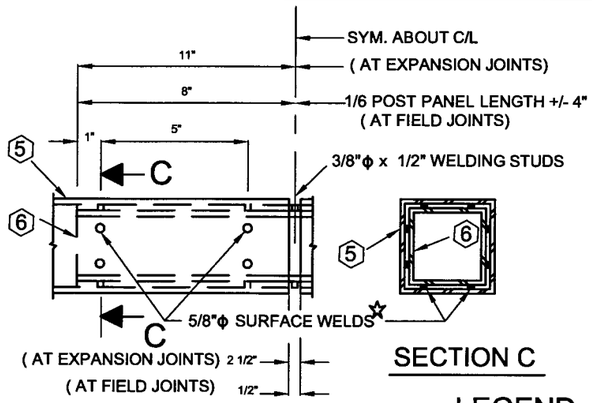

FIELD ERECTION JOINT DETAIL

☆ MIN. 5/8" FLAT SURFACE DIA. PUNCHINGS OR STUDS MAY BE USED AS AN ALTERNATE.

SECTION C

NOTES

RAILING SHALL BE FABRICATED IN LENGTHS THAT INCLUDE 3 OR 4 POSTS.

RAIL POST AND RAILING SHALL BE GIVEN A NO. 6 COMMERCIAL BLAST CLEANING BY S.S.P.C. SPECIFICATIONS.

RAILING SHALL BE PAINTED BLACK, FED. COLOR #27038 OR APPROVED EQUAL. PAINT SHALL BE A TWO COAT SYSTEM ON ALL SURFACES AND EXTEND 4' BELOW GROUND LINE.

ALL MATERIALS USED IN FABRICATION SHALL BE MADE FROM MATERIALS CONFORMING TO A.S.T.M. DESIGNATION A709 GRADE 36 UNLESS NOTED OTHERWISE.

GA. MEANS BW GAUGE STEEL THICKNESS.

LEGEND

1. POSTS ARE 2" X 2" X 1/8" STEEL TUBING.
2. LATERALS ARE 2" X 2" X 1/8" STEEL TUBING.
3. TOP RAILING IS 3" X 2" X 1/8" STEEL TUBING.
4. PICKETS ARE 1" X 1" X 12 GA. STEEL TUBING.
5. 2" X 2" X 1/8" OR 3" X 2" X 1/8" STEEL TUBING.
6. 1" X 1" X 11 GA." OR 2" X 1" X GA. STEEL TUBING.
7. 1 3/4" X 1 3/4" X 11 GA. TUBING. OR 2 3/4" X 1 3/4" X 11 GA. FABRICATED BOX.

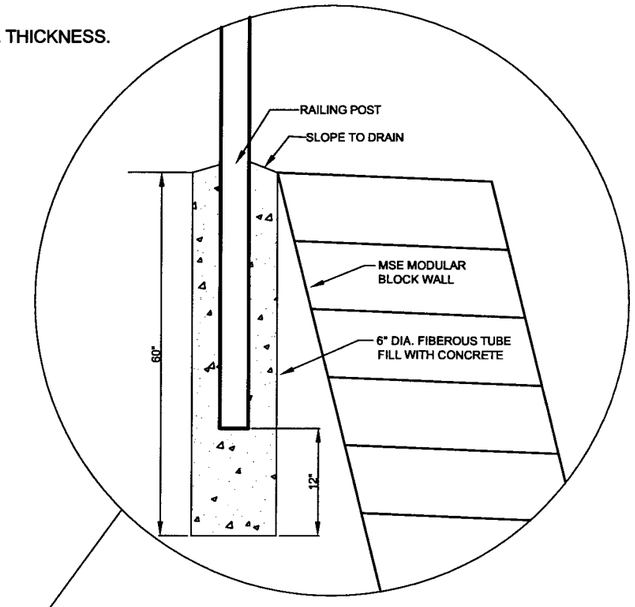

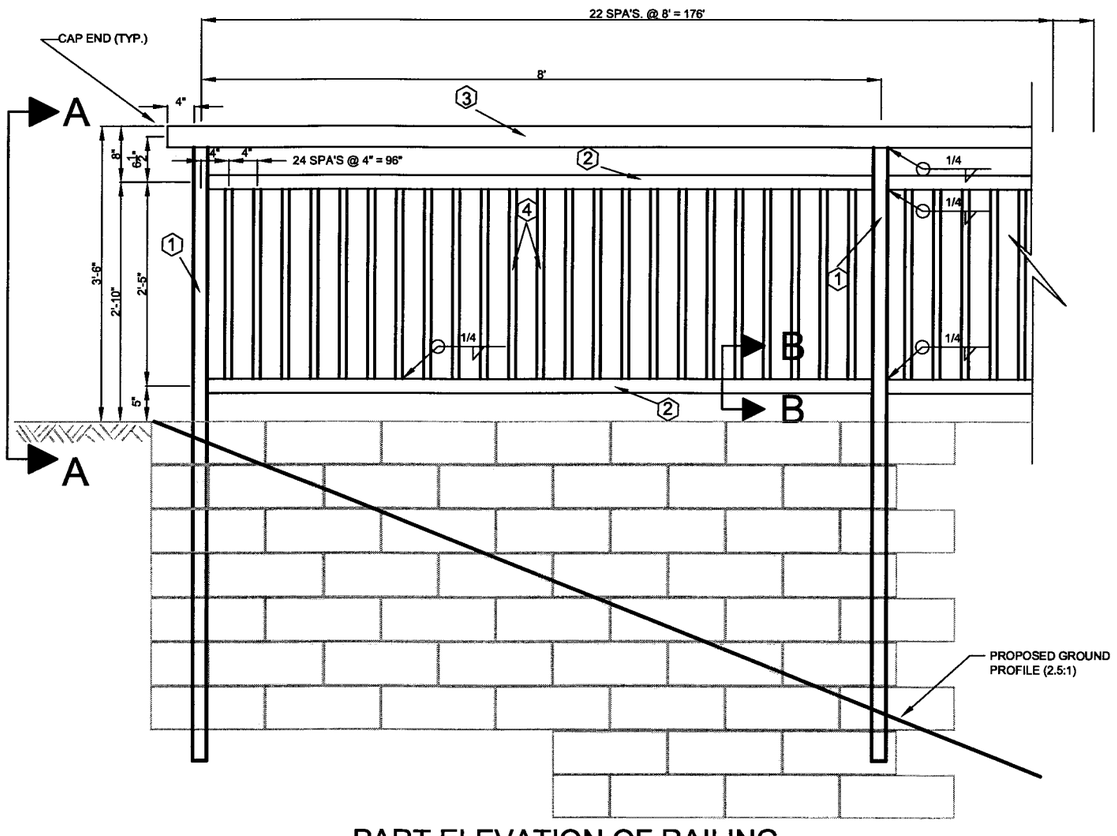

PART ELEVATION OF RAILING

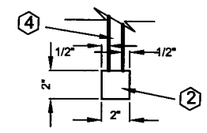

SECTION B-B
THROUGH RAILING

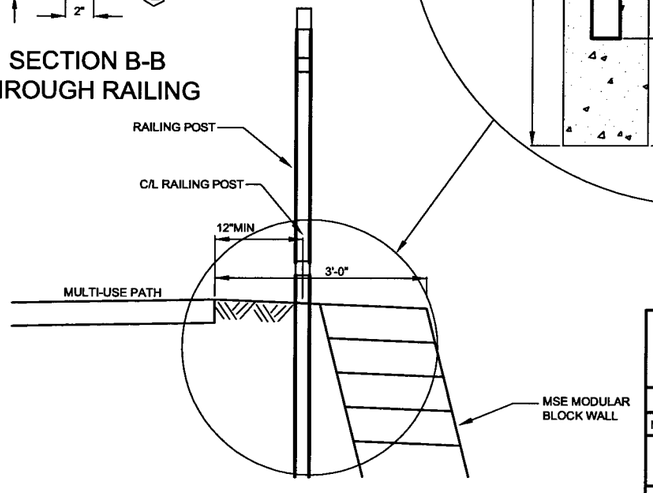

SECTION A-A
THROUGH BLOCK WALL

NOTE:
POSTS SHALL BE MOUNTED IN WALL IF SELECTED SYSTEM ALLOWS.

ORIGINAL PLANS PREPARED BY
CENTRAL WISCONSIN ENGINEERS
AND ARCHITECTS, INC.

NO.	DATE	REVISION	BY

STATE OF WISCONSIN
DEPARTMENT OF TRANSPORTATION
STRUCTURES DESIGN SECTION

STRUCTURE R-37-34

RETAINING WALL ALONG WESTON AVENUE

COUNTY MARATHON	~~TOWN/CITY/~~VILLAGE WESTON
DESIGN SPEC. AASHTO 2002	LOAD —— CONST. SPEC. 2003
DESIGNED BY R.A.M. / DESIGN CK'D. ——	DRAWN BY A.LEE / PLANS CK'D. ——

APPROVED _____
CHIEF STRUCTURAL DESIGN ENGINEER DATE

TUBULAR RAILING, PEDESTRIAN 210

SHEET 3 OF 3

DATE: NOV. 2003

I.D.

P:\DRAFT\32290200 DOT WESTON AVE\RAIL DETAIL.dwg, Layout1, 04/01/2004 10:21:28 AM

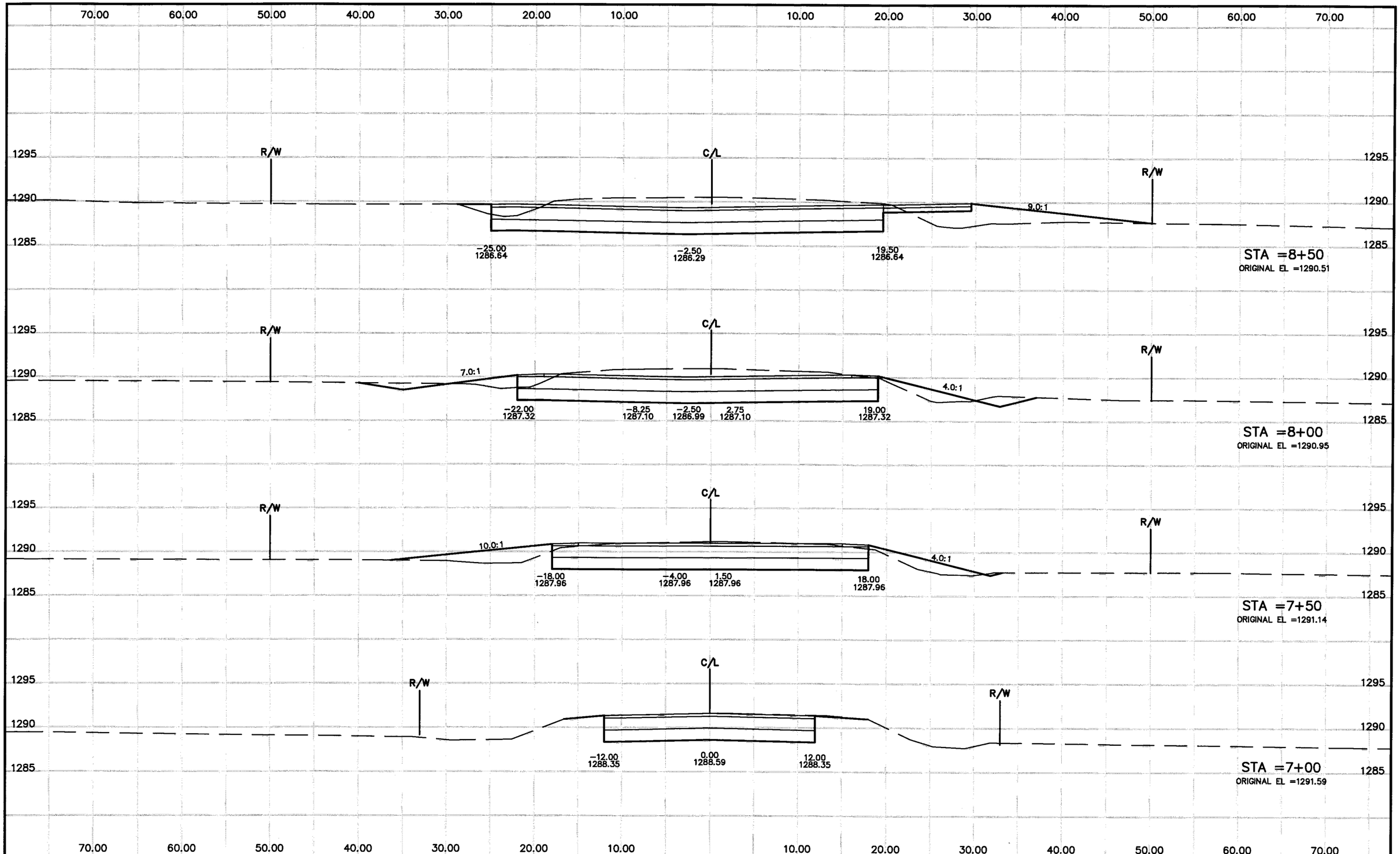

STATE PROJECT NUMBER: 6999-10-75	HWY: WESTON AVENUE	COUNTY: MARATHON	CROSS SECTIONS: WESTON AVENUE	SHEET NO: 21	E

P:\DRAFT\32290200 WDOT\rc040001.dwg, Model, 04/01/2004 09:53:10 AM

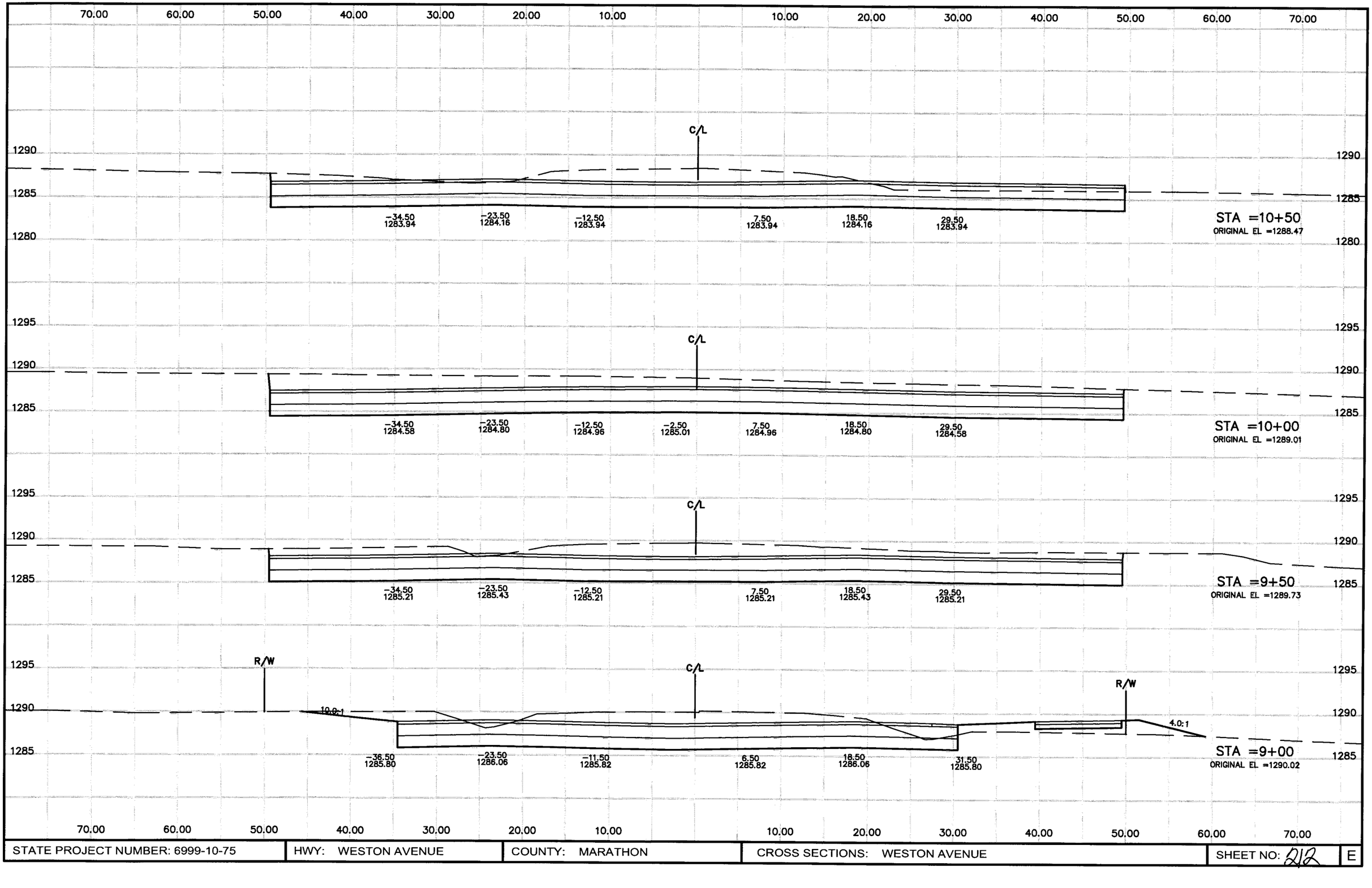

P:\DRAFT\32290200 WDOT\rc041001.dwg, Model, 04/01/2004 09:53:48 AM

STATE PROJECT NUMBER: 6999-10-75	HWY: WESTON AVENUE	COUNTY: MARATHON	CROSS SECTIONS: WESTON AVENUE	SHEET NO: 212 E

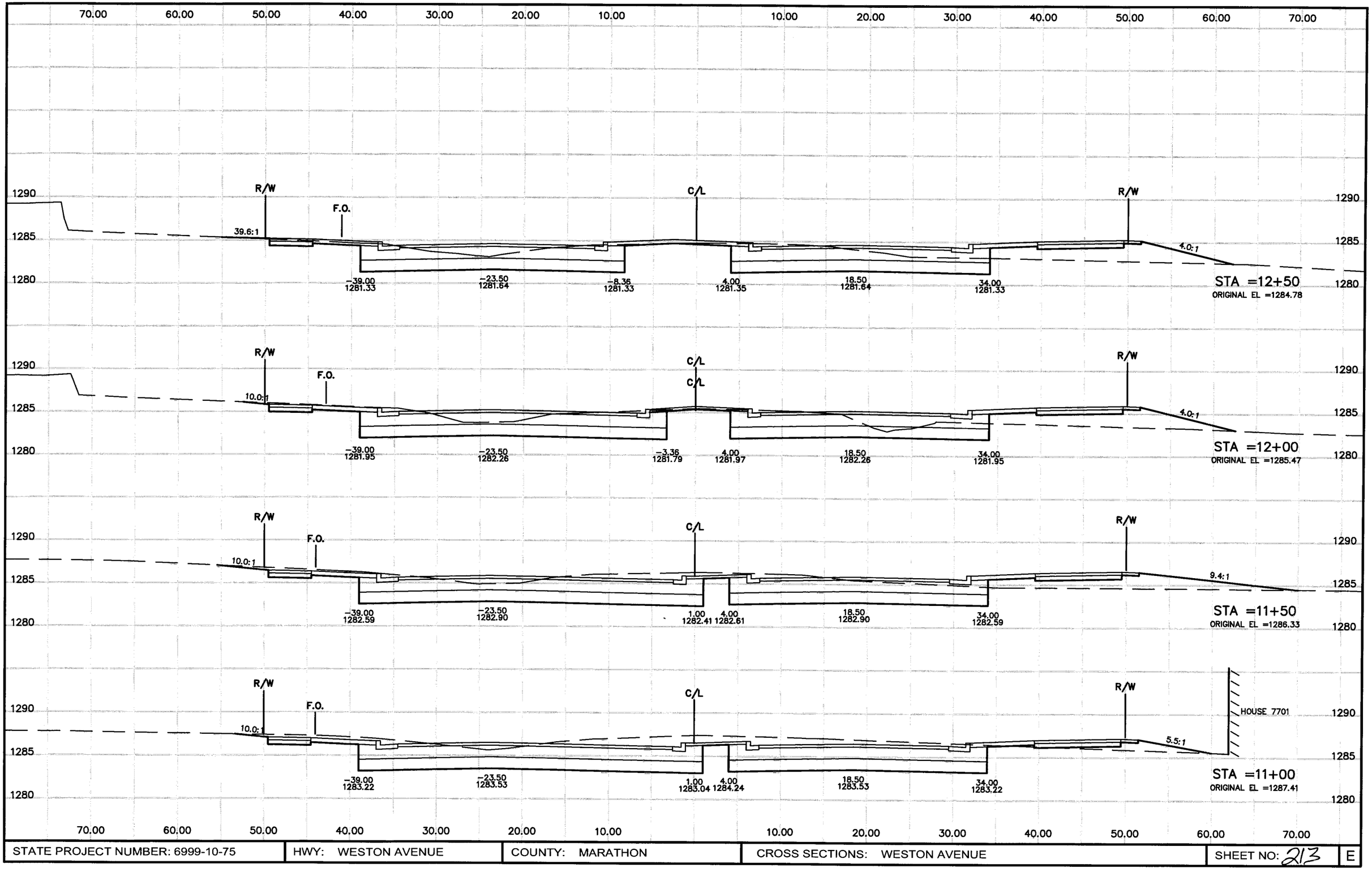

P:\DRAFT\32290200 WDOT\rc042001.dwg, Model, 04/01/2004 09:54:01 AM

STATE PROJECT NUMBER: 6999-10-75	HWY: WESTON AVENUE	COUNTY: MARATHON	CROSS SECTIONS: WESTON AVENUE	SHEET NO: 213	E

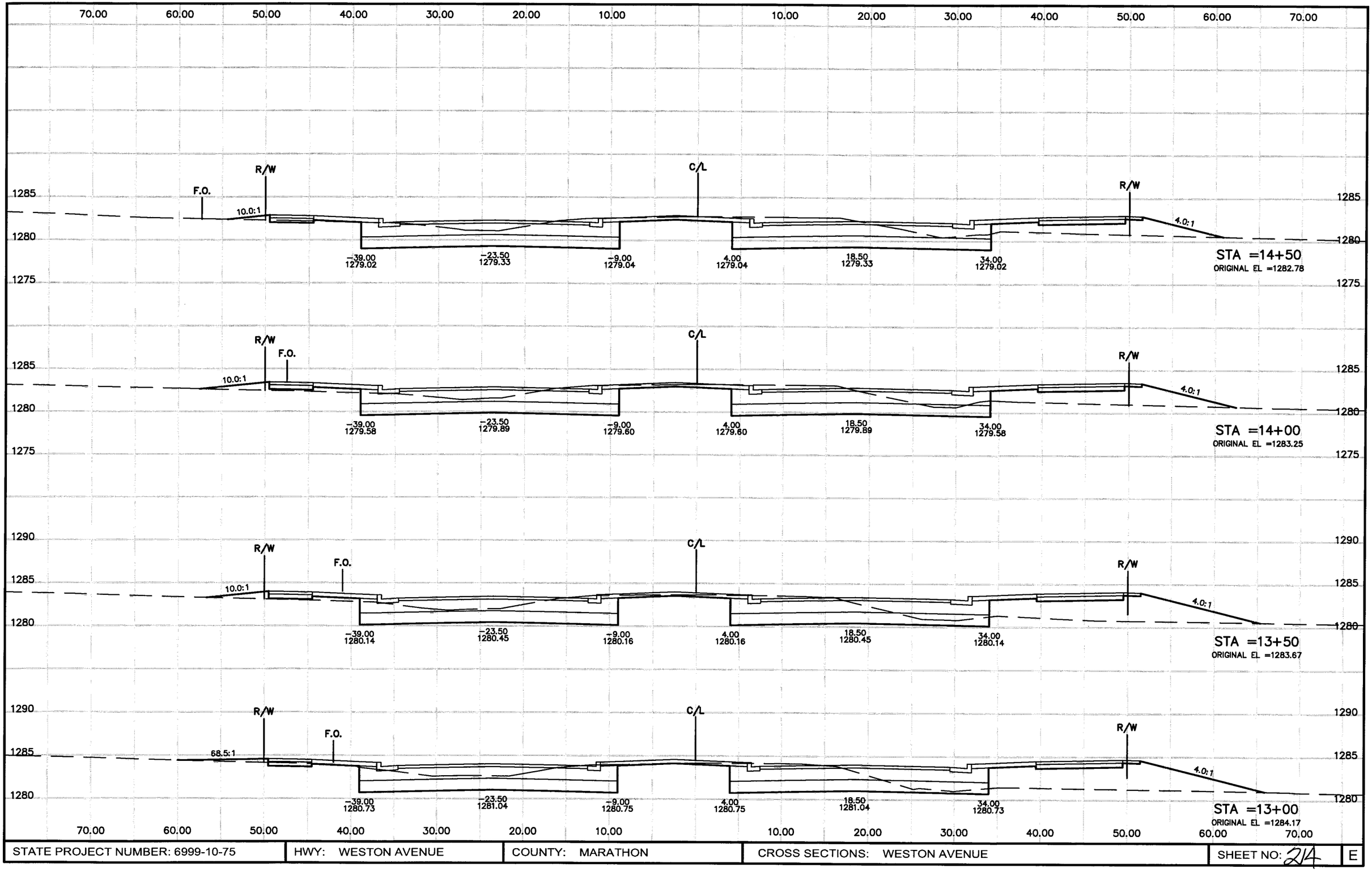

STATE PROJECT NUMBER: 6999-10-75	HWY: WESTON AVENUE	COUNTY: MARATHON	CROSS SECTIONS: WESTON AVENUE	SHEET NO: 24	E

P:\DRAFT\32290200 WDOT\rc043001.dwg, Model, 04/01/2004 09:54:13 AM

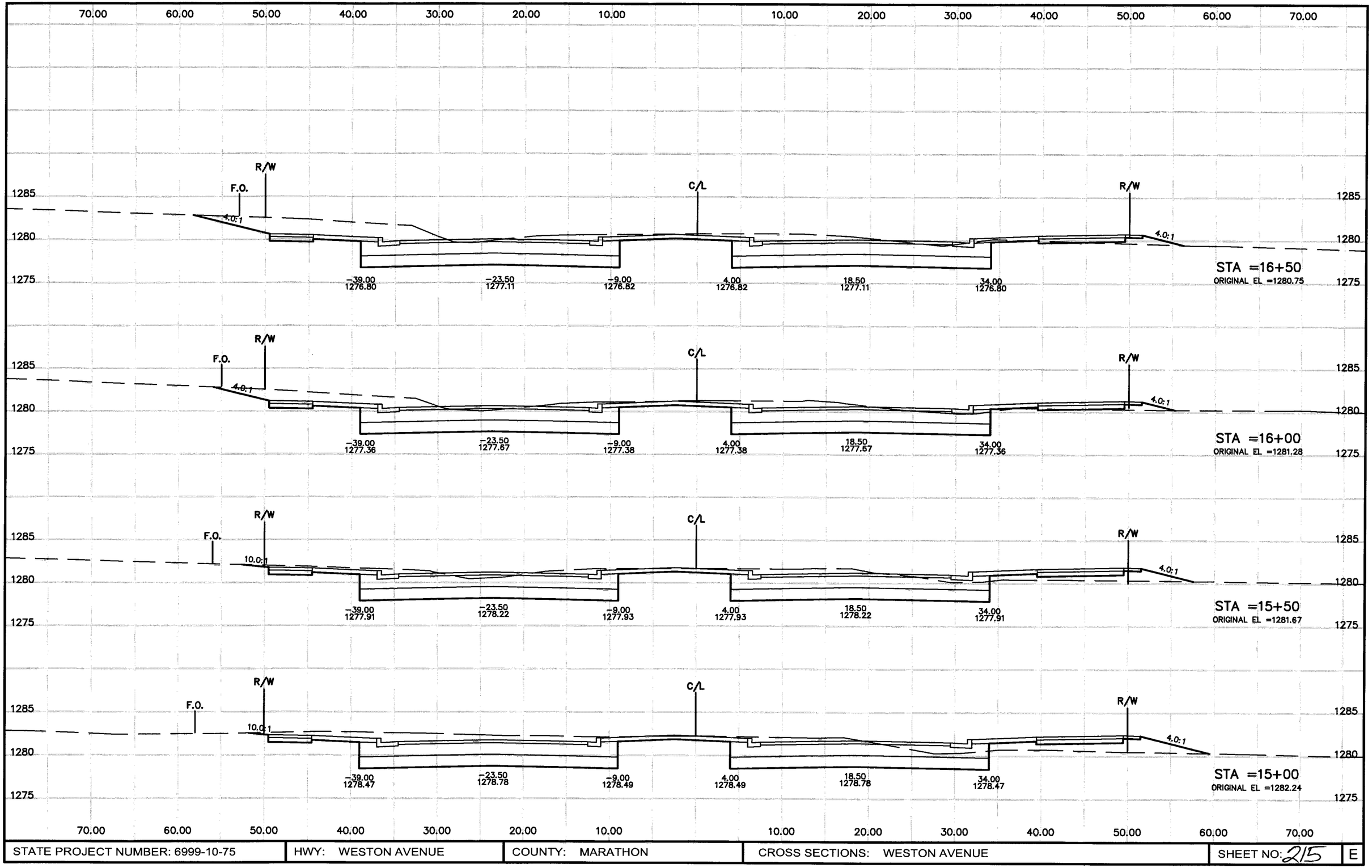

P:\DRAFT\3229200 WDOT\rc044001.dwg, Model, 04/01/2004 09:56:12 AM

STATE PROJECT NUMBER: 6999-10-75	HWY: WESTON AVENUE	COUNTY: MARATHON	CROSS SECTIONS: WESTON AVENUE	SHEET NO: 215	E

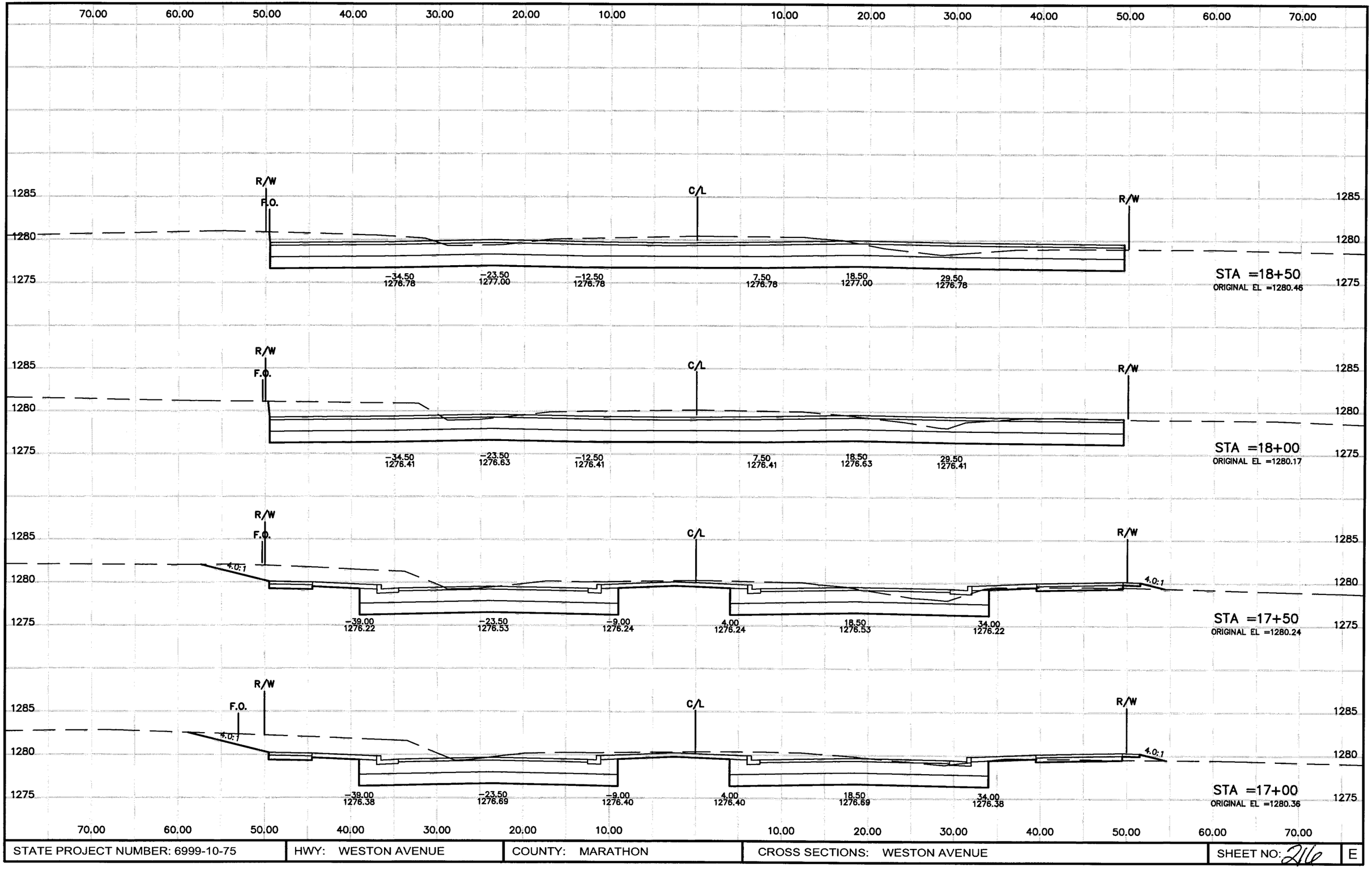

STATE PROJECT NUMBER: 6999-10-75	HWY: WESTON AVENUE	COUNTY: MARATHON	CROSS SECTIONS: WESTON AVENUE	SHEET NO: 216	E

P:\DRAFT\32290200 WDOTrc045001.dwg, Model, 04/01/2004 09:56:25 AM

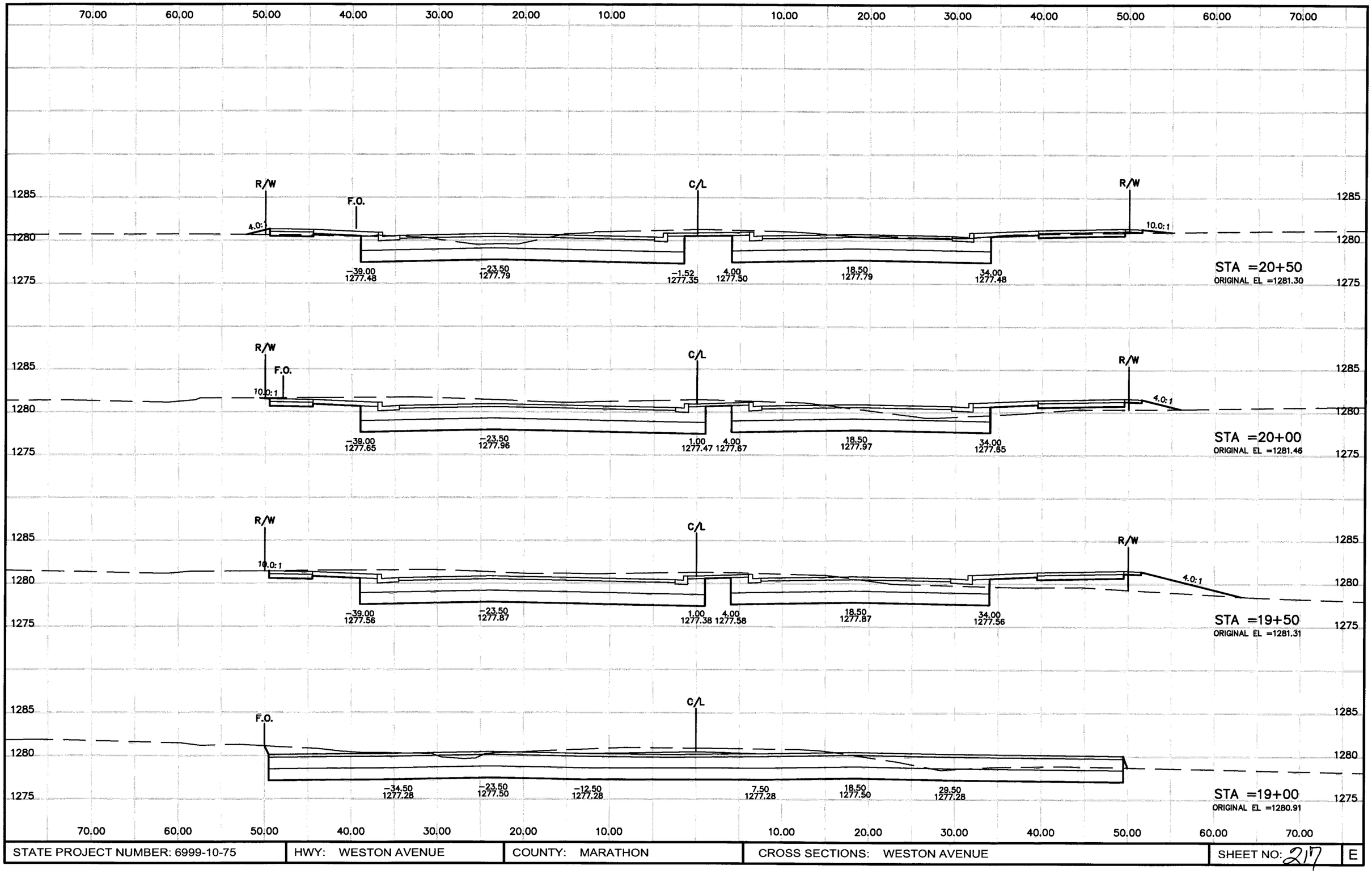

STATE PROJECT NUMBER: 6999-10-75	HWY: WESTON AVENUE	COUNTY: MARATHON	CROSS SECTIONS: WESTON AVENUE	SHEET NO: 217 E

P:\DRAFT\32290200 WDOT\rc046001.dwg, Model, 04/01/2004 09:56:35 AM

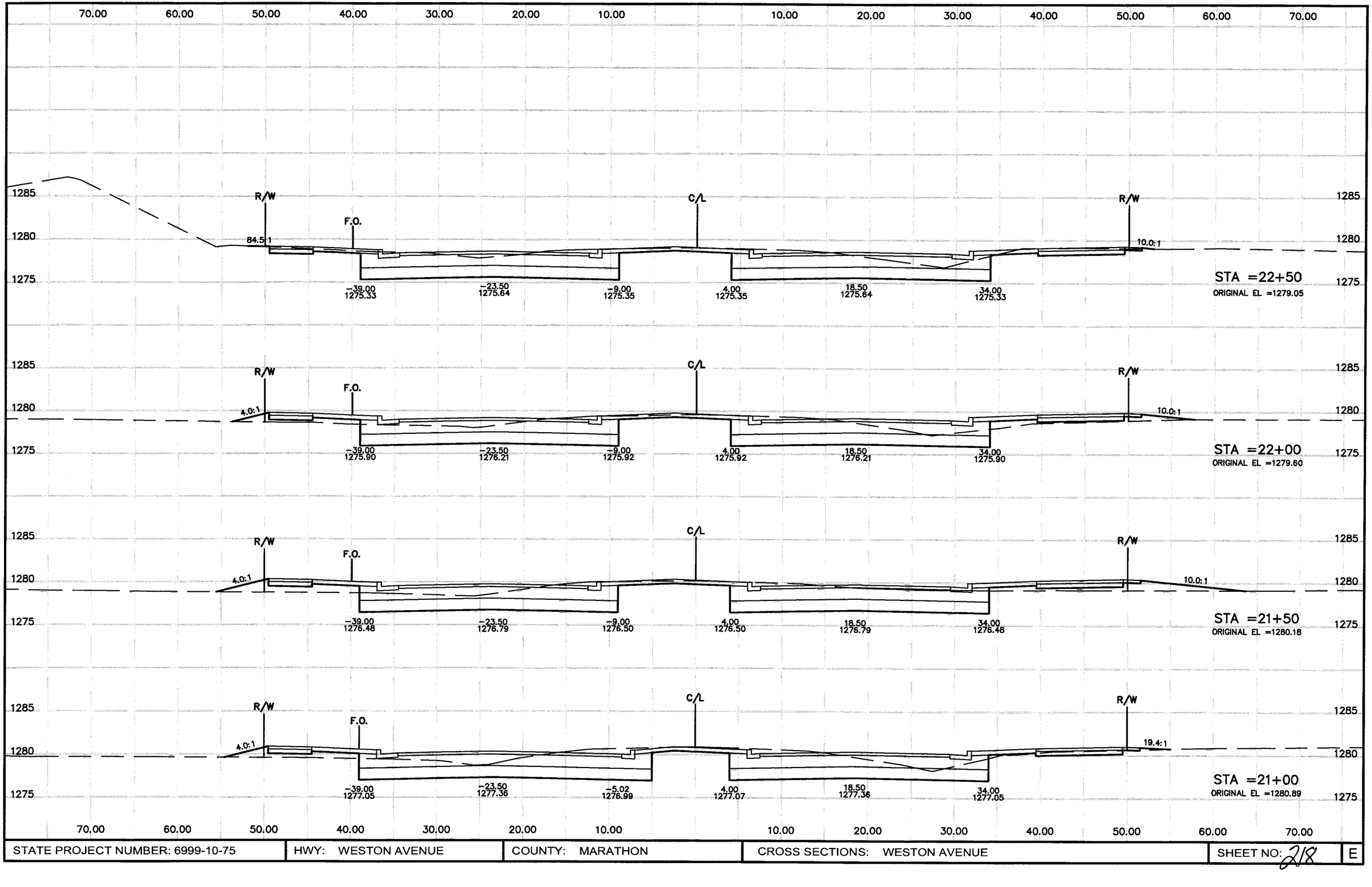

P:\DRAFT\32290200 WDOTrc047001.dwg, Model, 04/01/2004 09:56:46 AM

STATE PROJECT NUMBER: 6999-10-75	HWY: WESTON AVENUE	COUNTY: MARATHON	CROSS SECTIONS: WESTON AVENUE	SHEET NO: 218	E

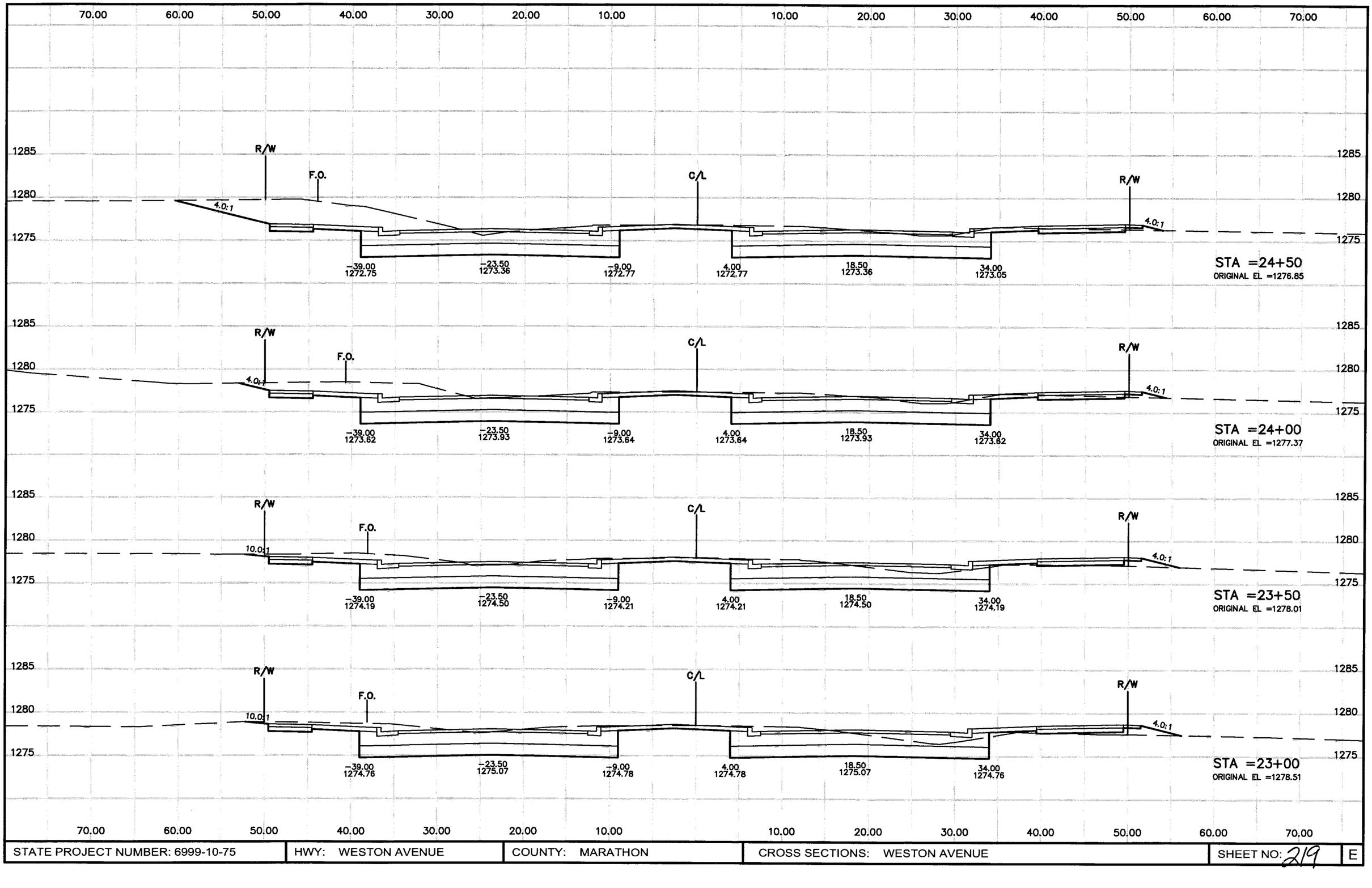

STATE PROJECT NUMBER: 6999-10-75	HWY: WESTON AVENUE	COUNTY: MARATHON	CROSS SECTIONS: WESTON AVENUE	SHEET NO: 219	E

P:\DRAFT\32290200 WDOT\rc048001.dwg, Model, 04/01/2004 09:56:56 AM

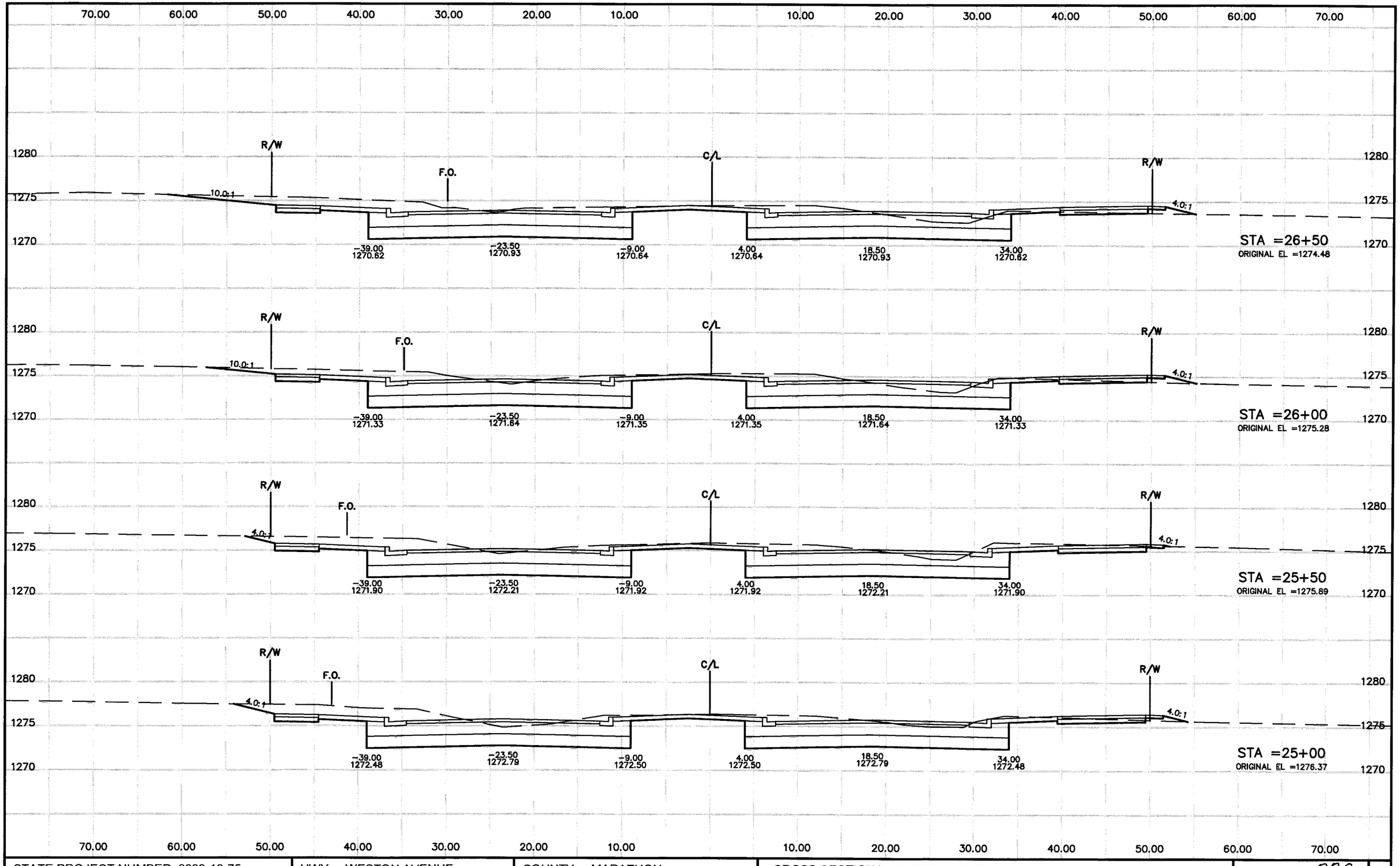

STATE PROJECT NUMBER: 6999-10-75	HWY: WESTON AVENUE	COUNTY: MARATHON	CROSS SECTIONS: WESTON AVENUE	SHEET NO: 220	E

P:\DRAFT\32290200 WDOT\rc049001.dwg, Model, 04/01/2004 09:57:06 AM

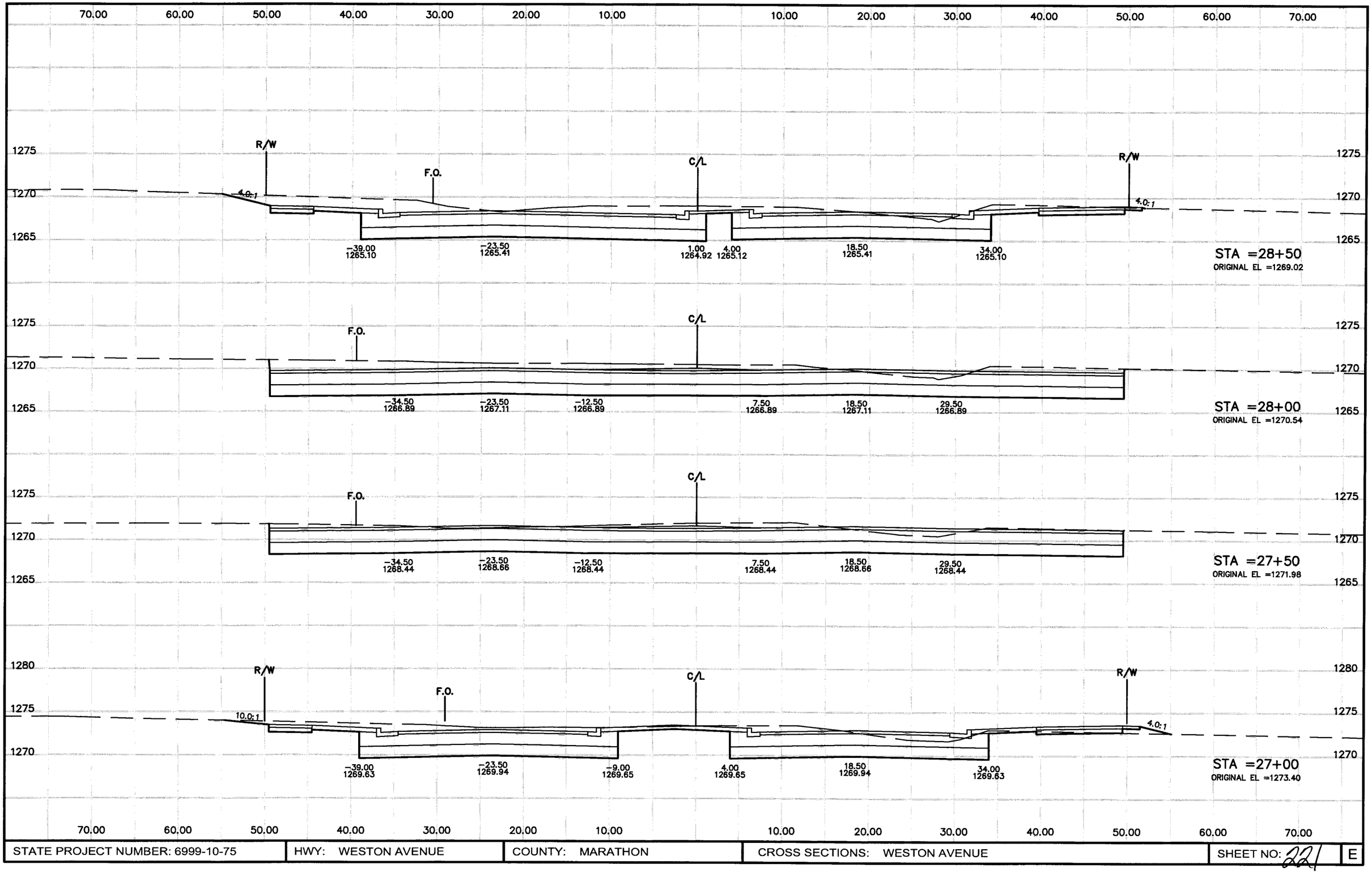

STATE PROJECT NUMBER: 6999-10-75	HWY: WESTON AVENUE	COUNTY: MARATHON	CROSS SECTIONS: WESTON AVENUE	SHEET NO: 22 / E

P:\DRAFT\32290200 WDOT\rc050001.dwg, Model, 04/01/2004 09:57:17 AM

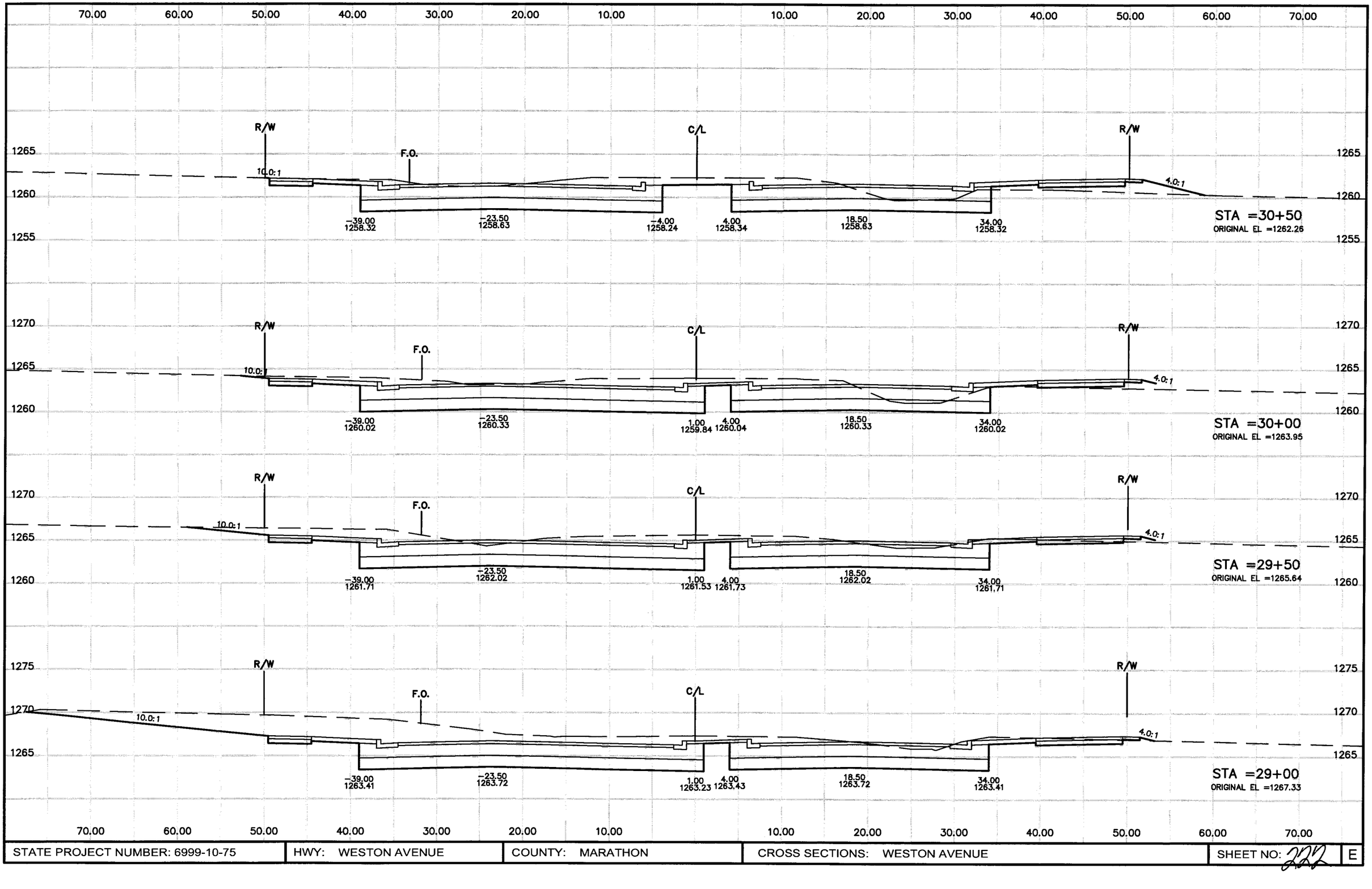

STATE PROJECT NUMBER: 6999-10-75	HWY: WESTON AVENUE	COUNTY: MARATHON	CROSS SECTIONS: WESTON AVENUE	SHEET NO: 222	E

P:\DRAFT\3229200 WDOT\rc051001.dwg, Model, 04/01/2004 09:57:27 AM

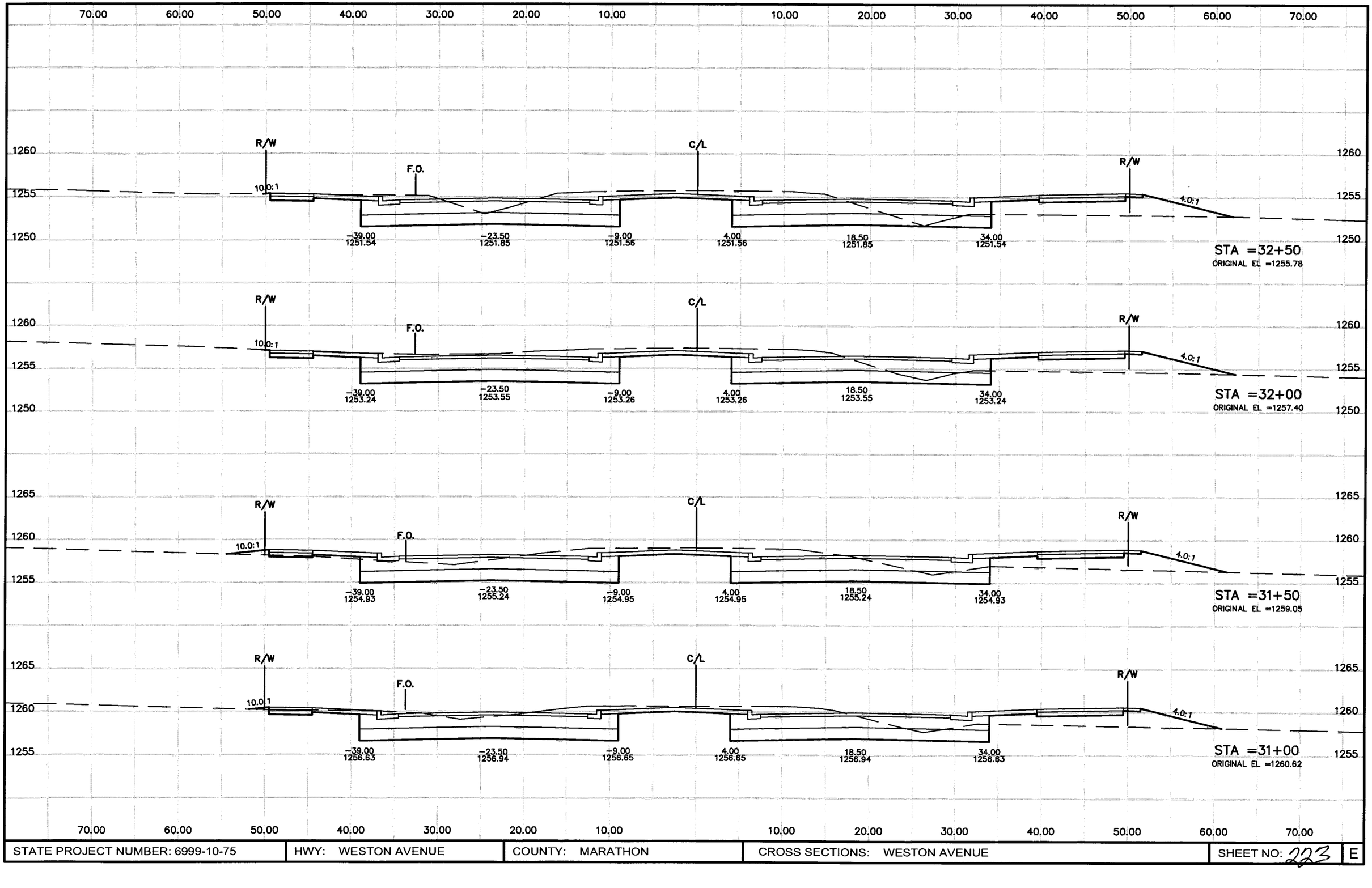

P:\DRAFT\32290200 WDOTrc052001.dwg, Model, 04/01/2004 09:57:38 AM

STATE PROJECT NUMBER: 6999-10-75	HWY: WESTON AVENUE	COUNTY: MARATHON	CROSS SECTIONS: WESTON AVENUE	SHEET NO: 223	E

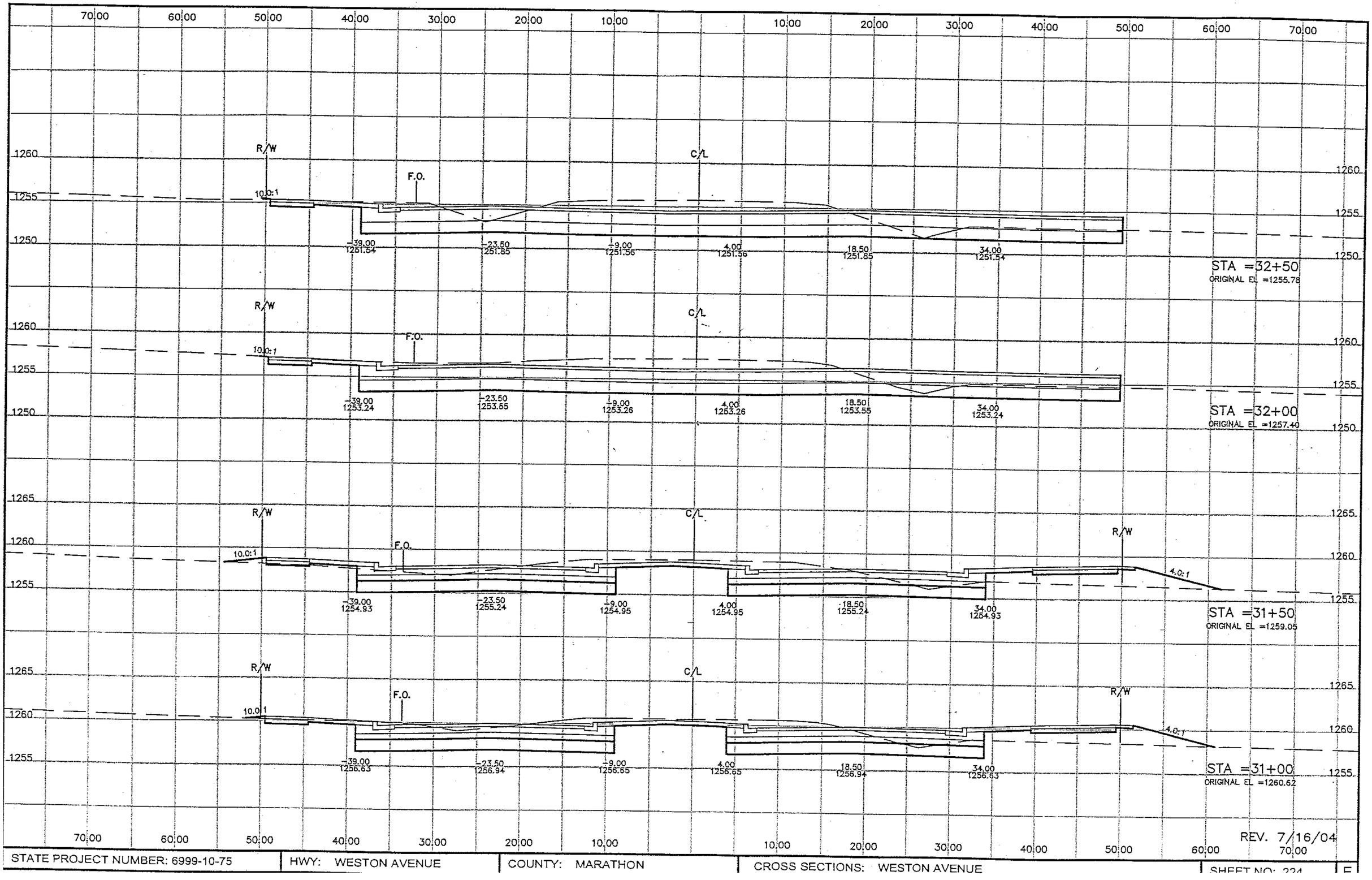

REV. 7/16/04

STATE PROJECT NUMBER: 6999-10-75	HWY: WESTON AVENUE	COUNTY: MARATHON	CROSS SECTIONS: WESTON AVENUE	SHEET NO: 224	E

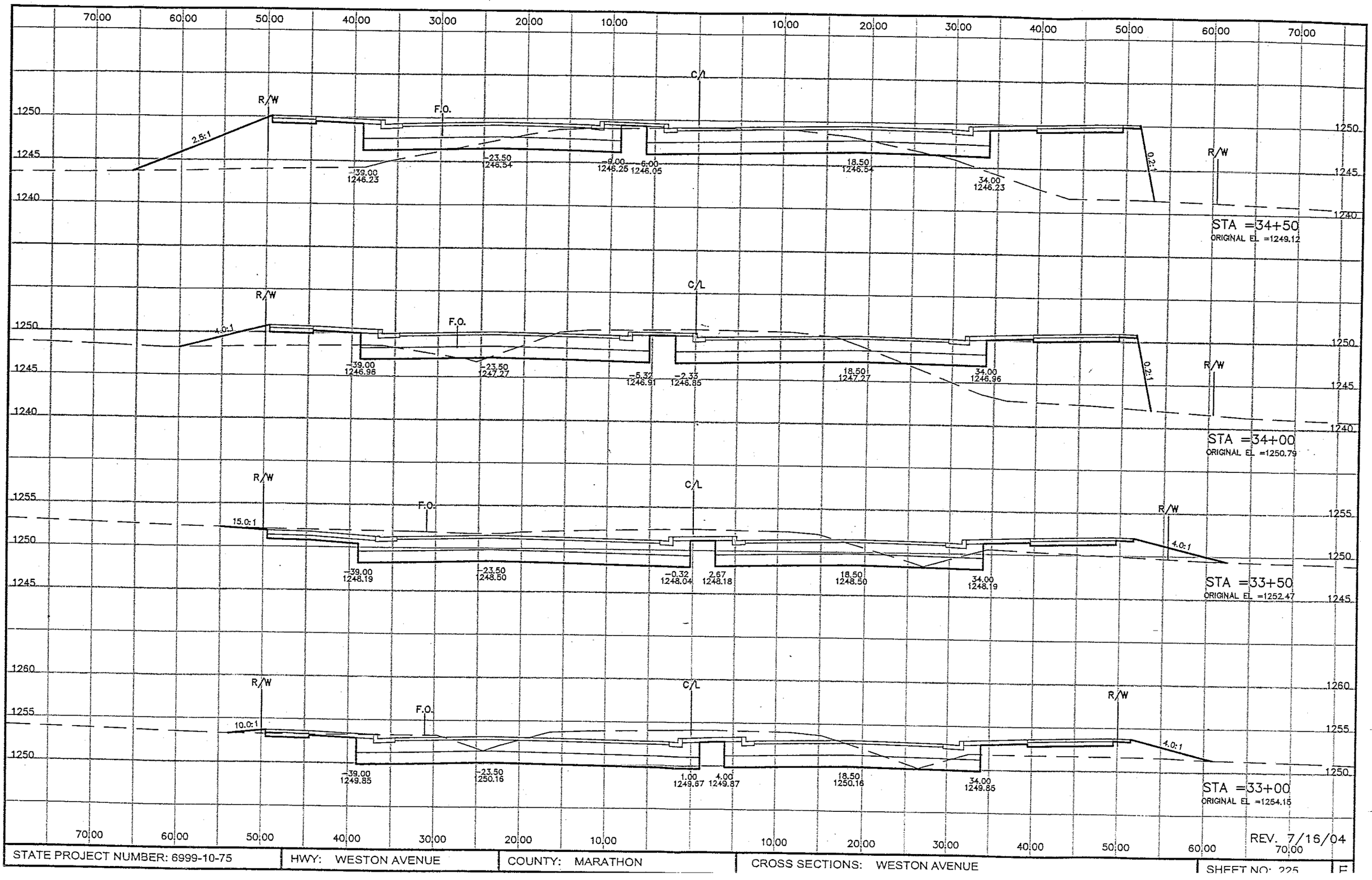

REV. 7/16/04

STATE PROJECT NUMBER: 6999-10-75	HWY: WESTON AVENUE	COUNTY: MARATHON	CROSS SECTIONS: WESTON AVENUE	SHEET NO: 225	F

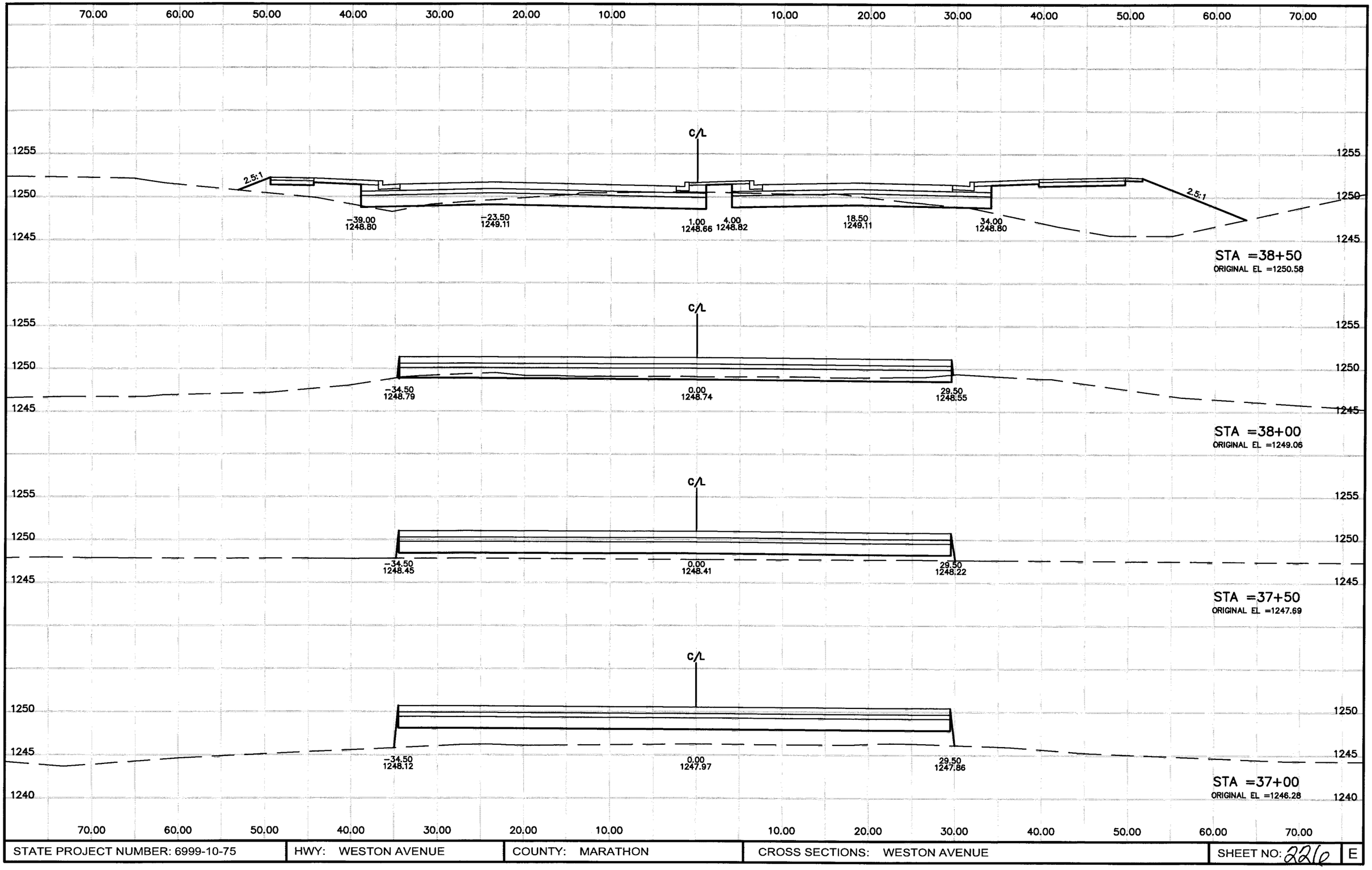

P:\DRAFT\32290200 WDOT\rc055001.dwg, Model, 04/01/2004 09:58:12 AM

STATE PROJECT NUMBER: 6999-10-75	HWY: WESTON AVENUE	COUNTY: MARATHON	CROSS SECTIONS: WESTON AVENUE	SHEET NO: 226	E

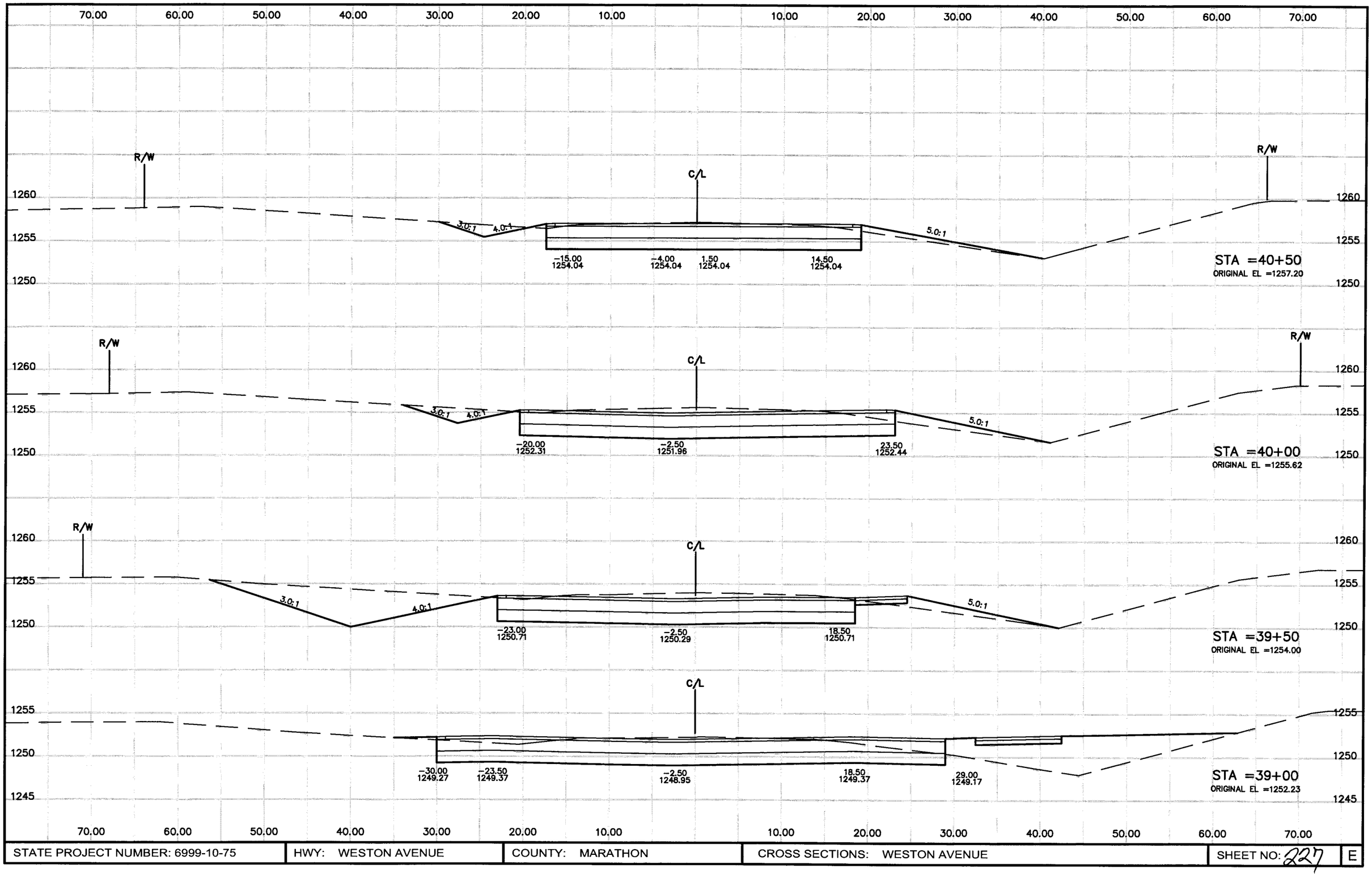

P:\DRAFT\32290200 WDOT\rc056001.dwg, Model, 04/01/2004 09:58:27 AM

STATE PROJECT NUMBER: 6999-10-75	HWY: WESTON AVENUE	COUNTY: MARATHON	CROSS SECTIONS: WESTON AVENUE	SHEET NO: 227	E

70.00 60.00 50.00 40.00 30.00 20.00 10.00 10.00 20.00 30.00 40.00 50.00 60.00 70.00

R/W

1265

1260

1255

R/W

1265

1260

1255

STA =41+50

ORIGINAL EL =1260.15

R/W

1265

1260

1255

C/L

-14.00
1255.43

0.00
1255.71

14.00
1255.43

R/W

1265

1260

1255

STA =41+00

ORIGINAL EL =1258.71

70.00 60.00 50.00 40.00 30.00 20.00 10.00 10.00 20.00 30.00 40.00 50.00 60.00 70.00

STATE PROJECT NUMBER: 6999-10-75	HWY: WESTON AVENUE	COUNTY: MARATHON	CROSS SECTIONS: WESTON AVENUE	SHEET NO: 228	E

P:\DRAFT\32290200 WDOT\rc057001.dwg, Model, 04/01/2004 09:58:39 AM

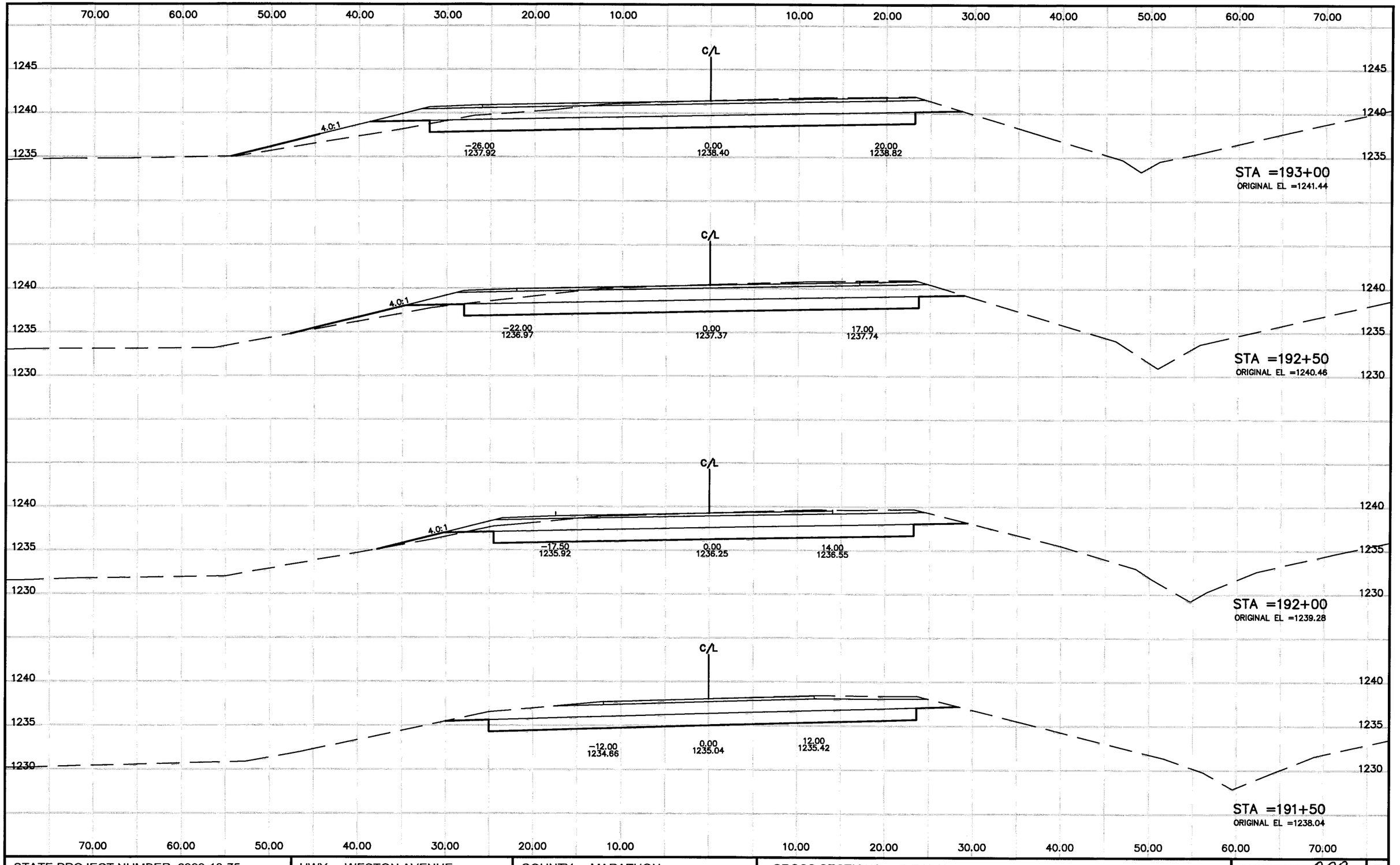

P:\DRAFT\3229020O WDOT\rc025007.dwg, Model, 04/01/2004 09:59:14 AM

STATE PROJECT NUMBER: 6999-10-75	HWY: WESTON AVENUE	COUNTY: MARATHON	CROSS SECTIONS: C.T.H. X	SHEET NO: 289	E

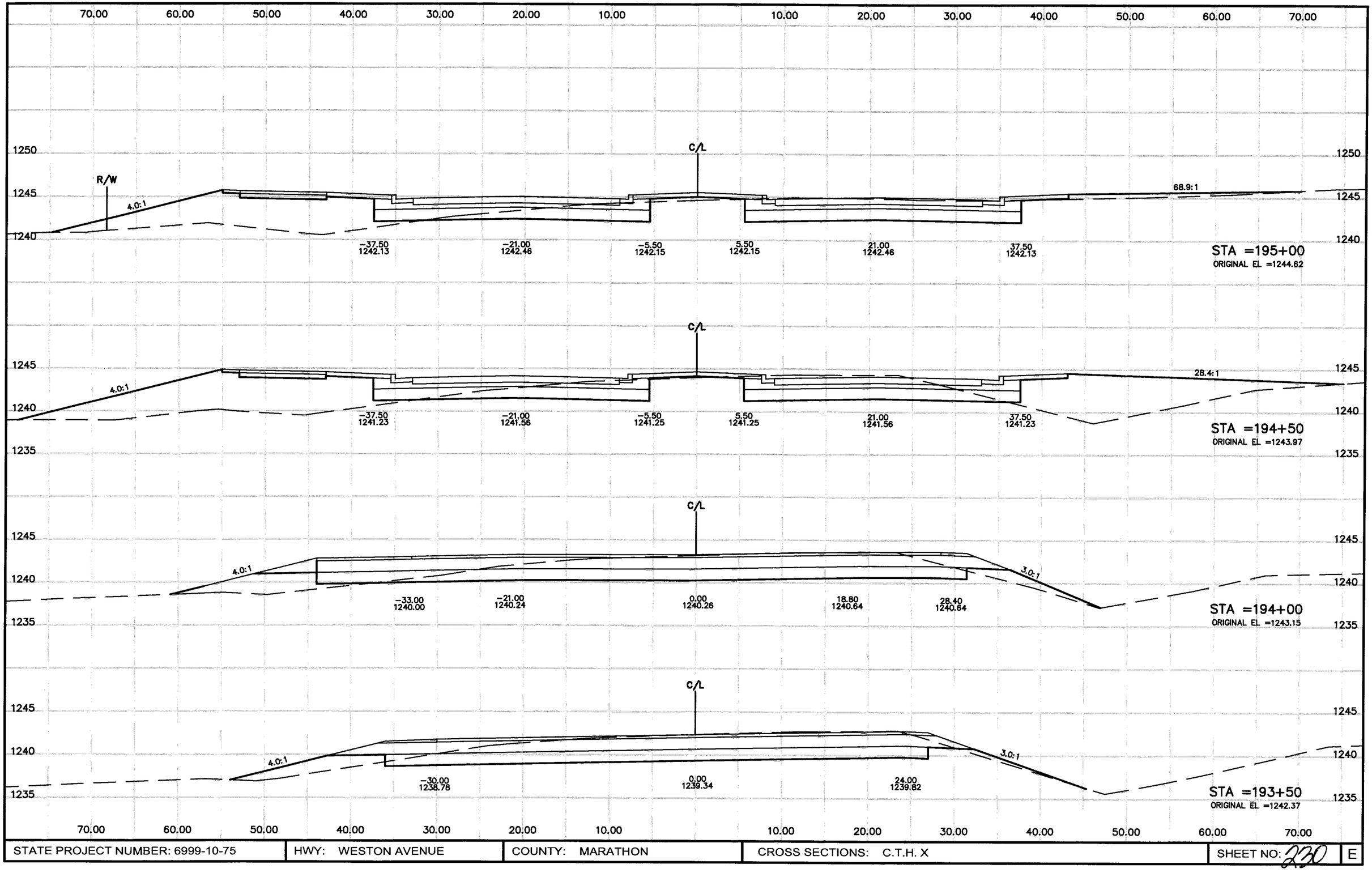

STATE PROJECT NUMBER: 6999-10-75	HWY: WESTON AVENUE	COUNTY: MARATHON	CROSS SECTIONS: C.T.H. X	SHEET NO: 230	E

P:\DRAFT\32290200 WDOT\rc026007.dwg, Model, 04/01/2004 09:59:26 AM

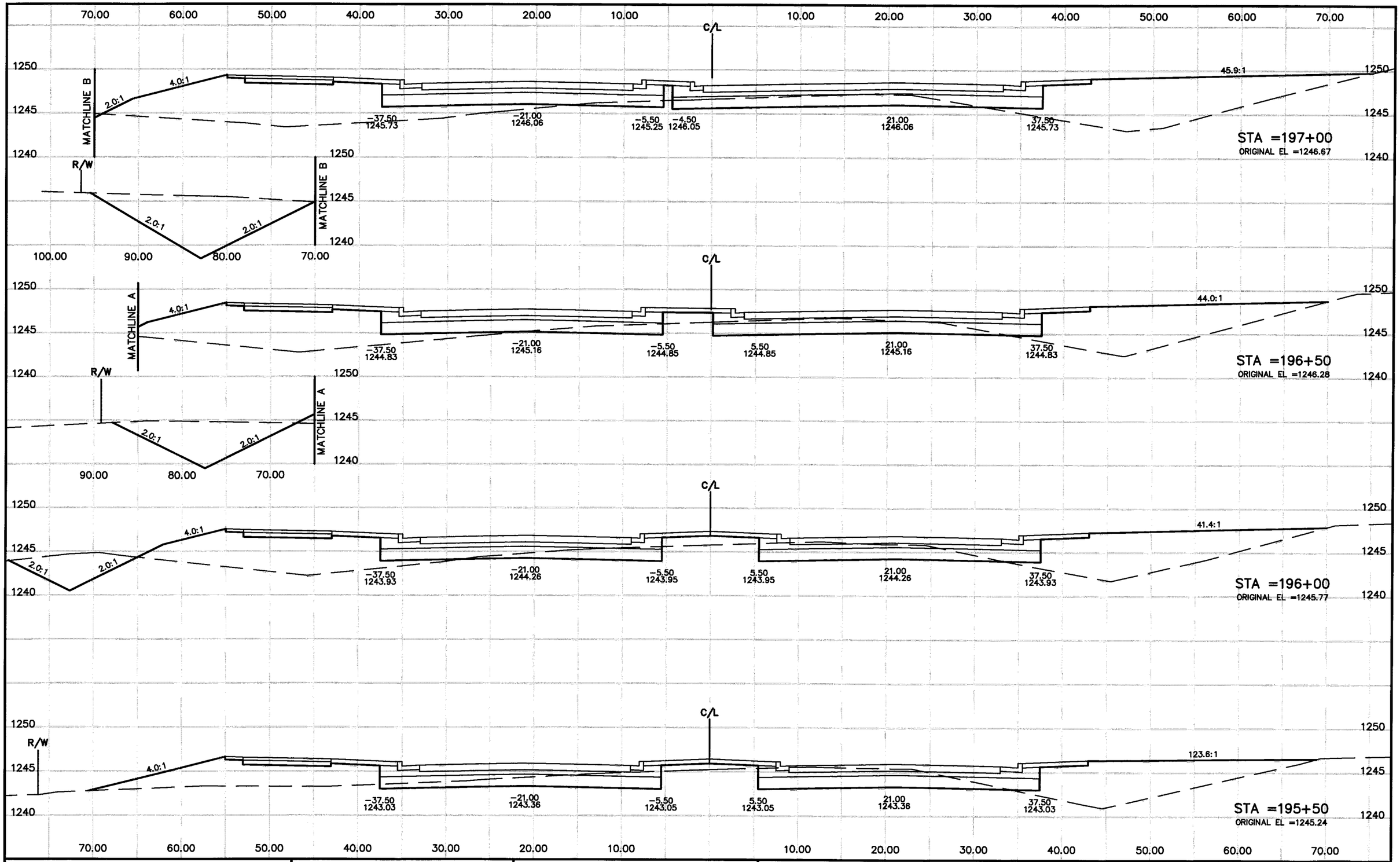

STATE PROJECT NUMBER: 6999-10-75	HWY: WESTON AVENUE	COUNTY: MARATHON	CROSS SECTIONS: C.T.H. X	SHEET NO: 23 / E

P:\DRAFT\32290200 WDOTvc027007.dwg, Model, 04/01/2004 09:59:38 AM

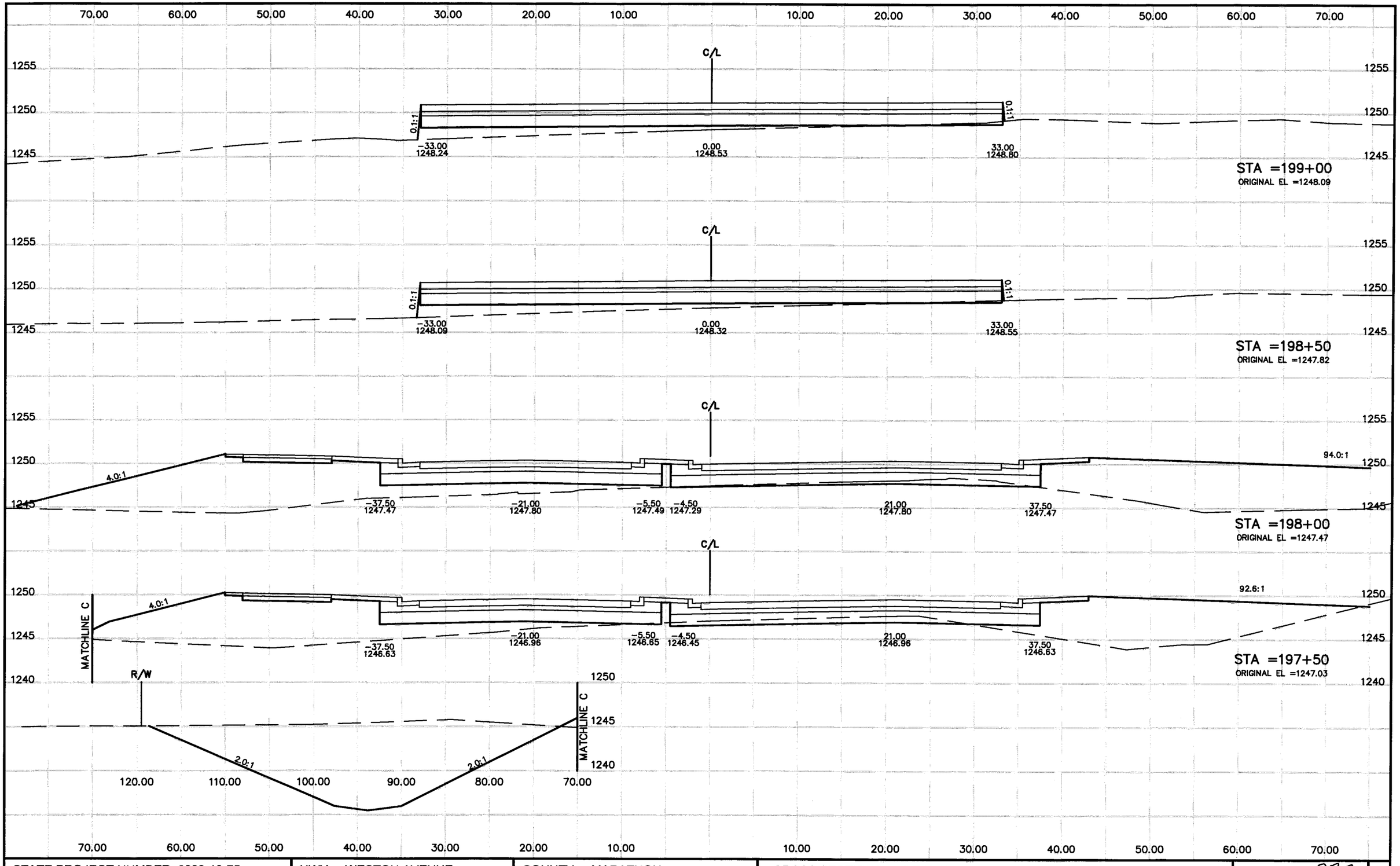

STATE PROJECT NUMBER: 6999-10-75	HWY: WESTON AVENUE	COUNTY: MARATHON	CROSS SECTIONS: C.T.H. X	SHEET NO: 232 E

P:\DRAFT\32290200 WDOT\rc028007.dwg, Model, 04/01/2004 09:59:51 AM

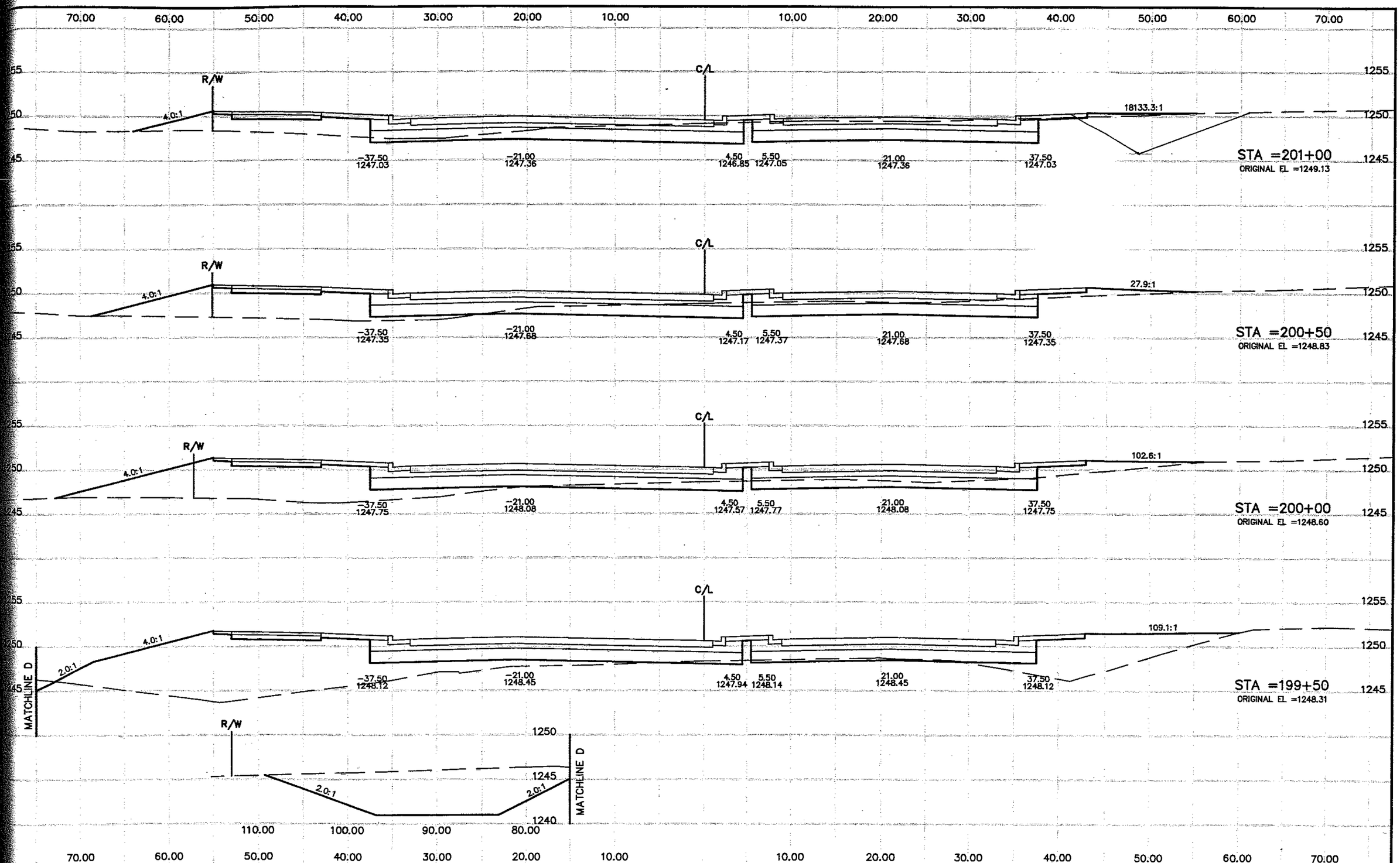

STATE PROJECT NUMBER: 6999-10-75	HWY: WESTON AVENUE	COUNTY: MARATHON	CROSS SECTIONS: C.T.H. X	SHEET NO: 233 E

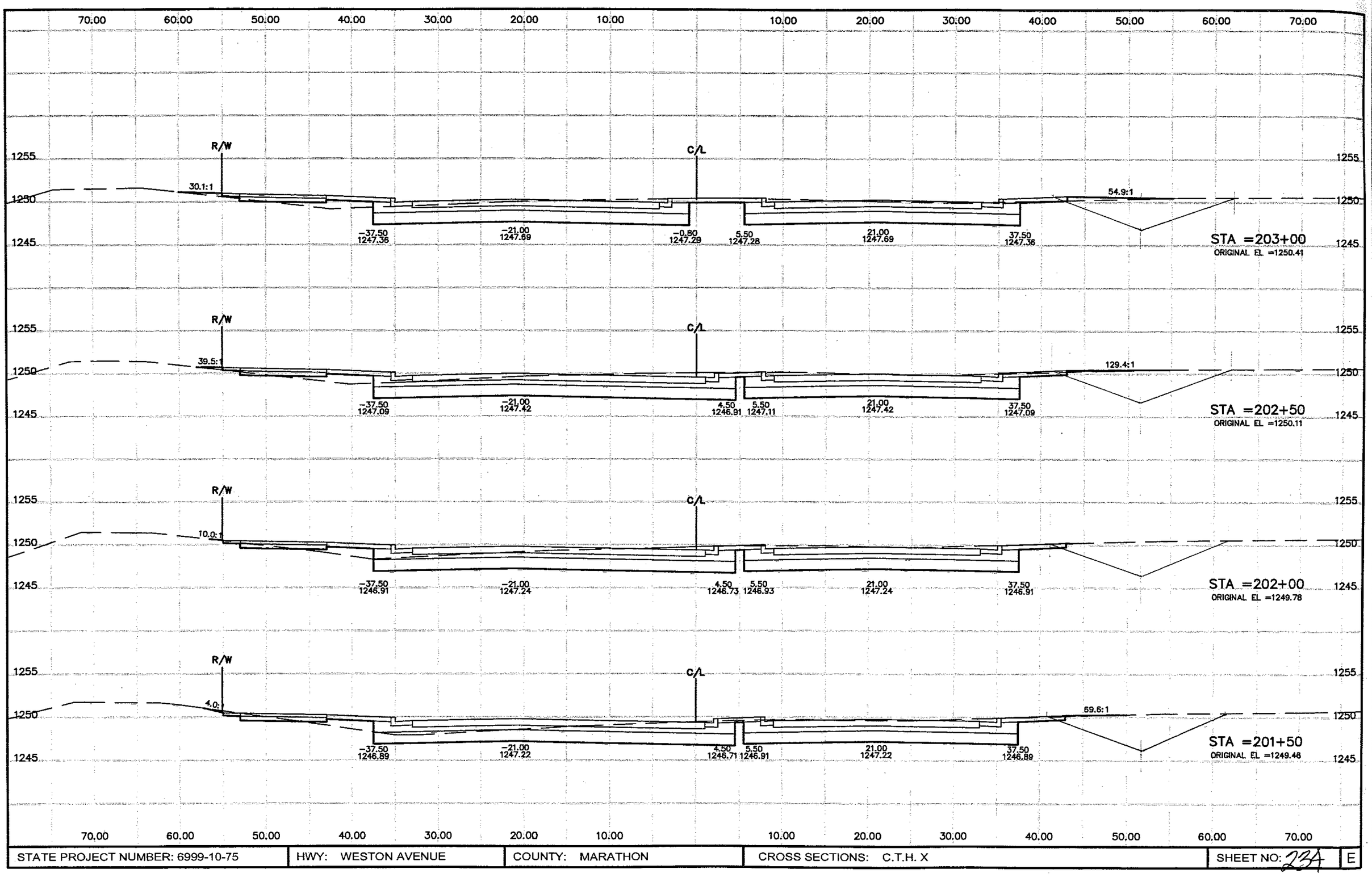

STATE PROJECT NUMBER: 6999-10-75	HWY: WESTON AVENUE	COUNTY: MARATHON	CROSS SECTIONS: C.T.H. X	SHEET NO: 23A	E

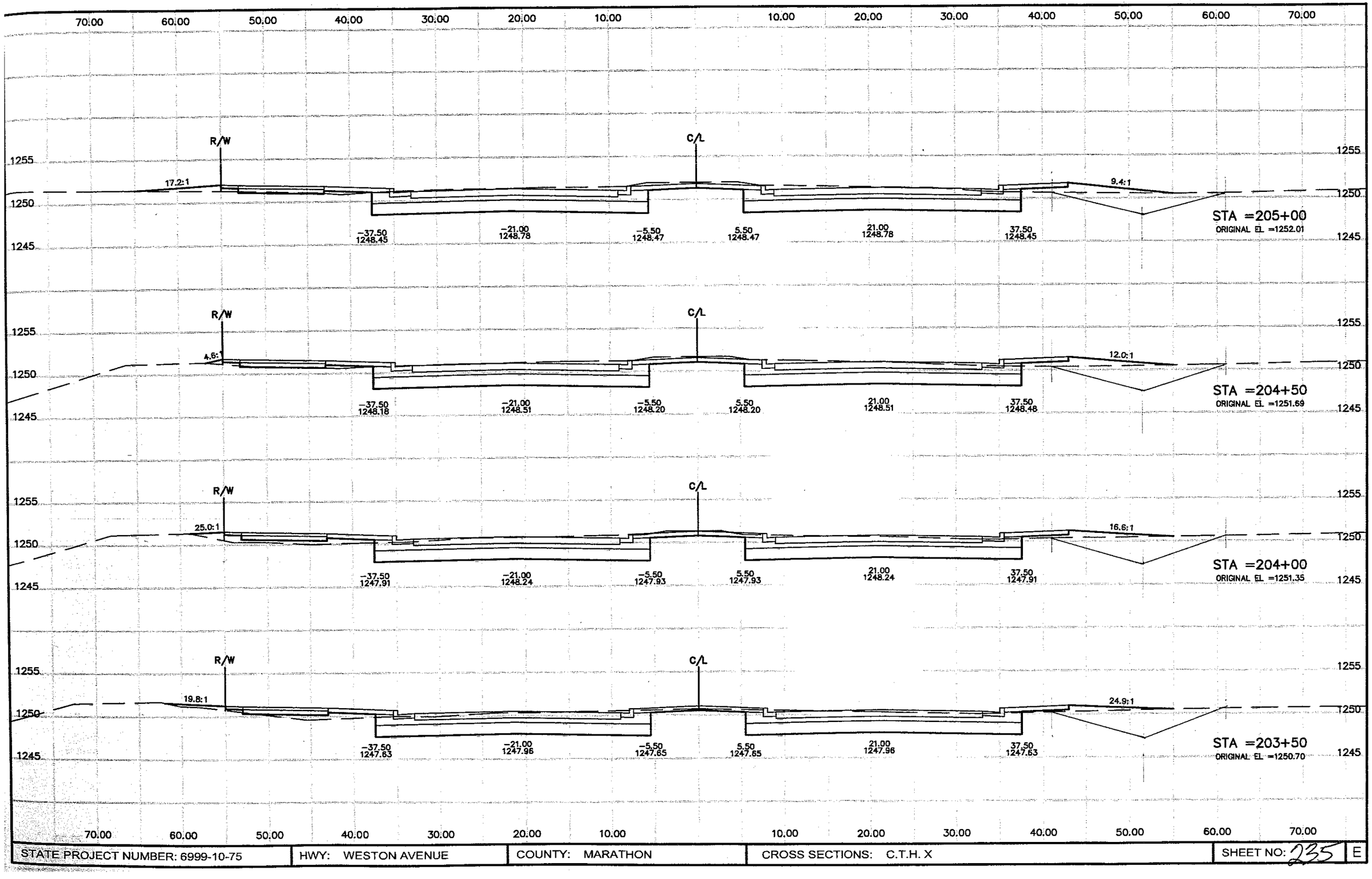

STATE PROJECT NUMBER: 6999-10-75	HWY: WESTON AVENUE	COUNTY: MARATHON	CROSS SECTIONS: C.T.H. X	SHEET NO: 235	E

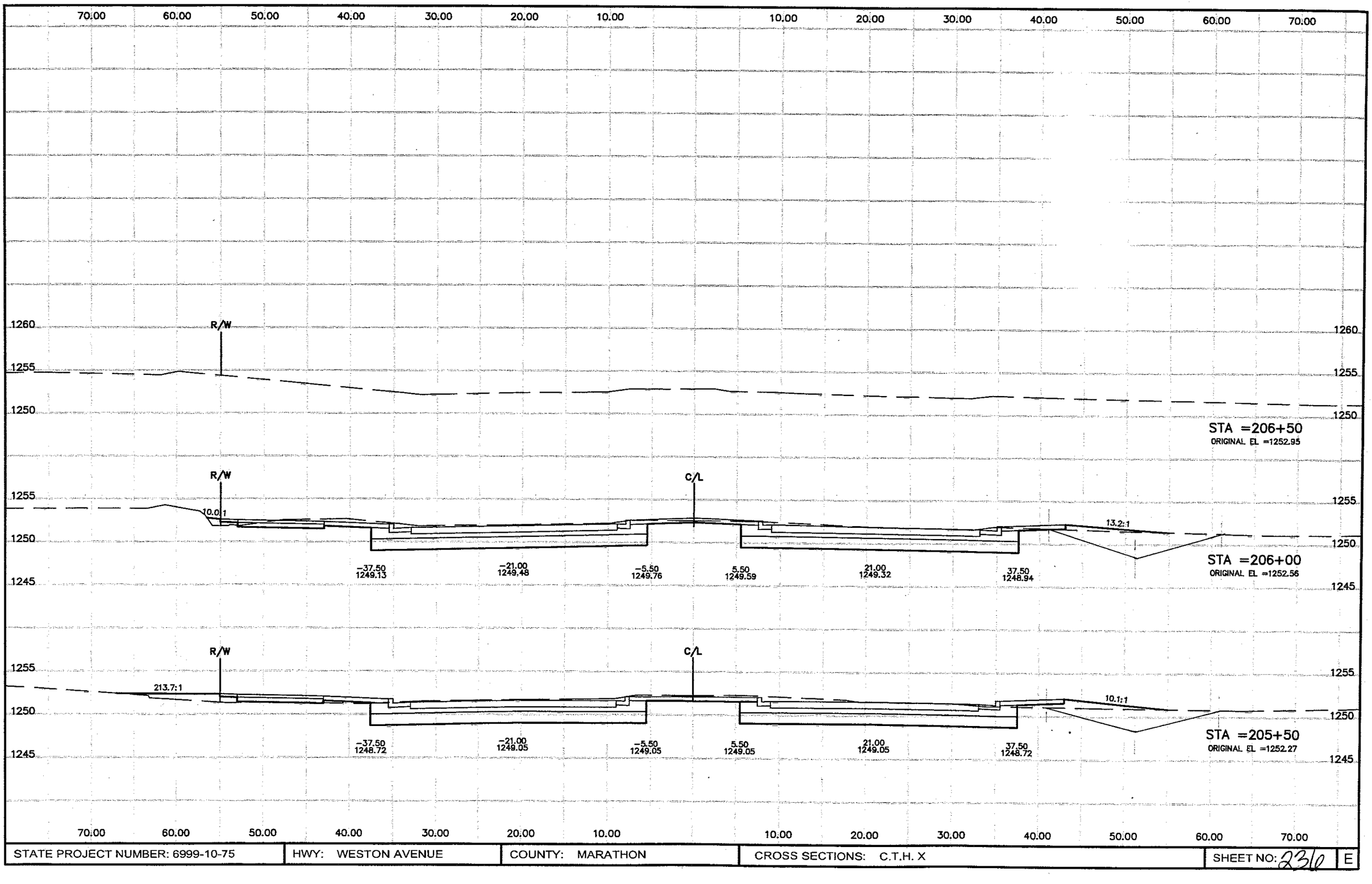

STATE PROJECT NUMBER: 6999-10-75	HWY: WESTON AVENUE	COUNTY: MARATHON	CROSS SECTIONS: C.T.H. X	SHEET NO: 23e E

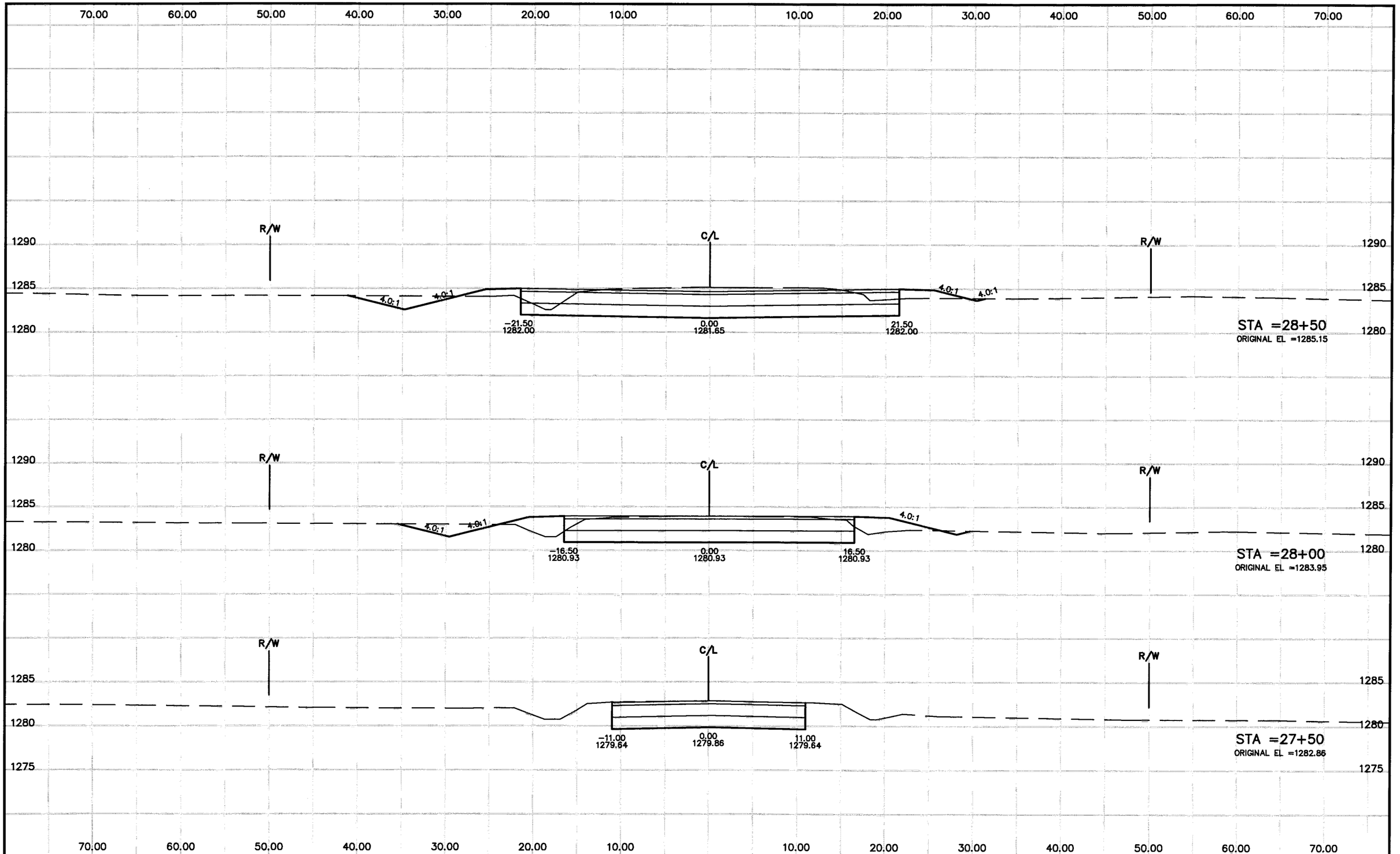

STATE PROJECT NUMBER: 6999-10-75	HWY: WESTON AVENUE	COUNTY: MARATHON	CROSS SECTIONS: BIRCH STREET	SHEET NO: 237 E

P:\DRAFT\32290200 WDOT\rc004008.dwg, Model, 04/01/2004 10:01:13 AM

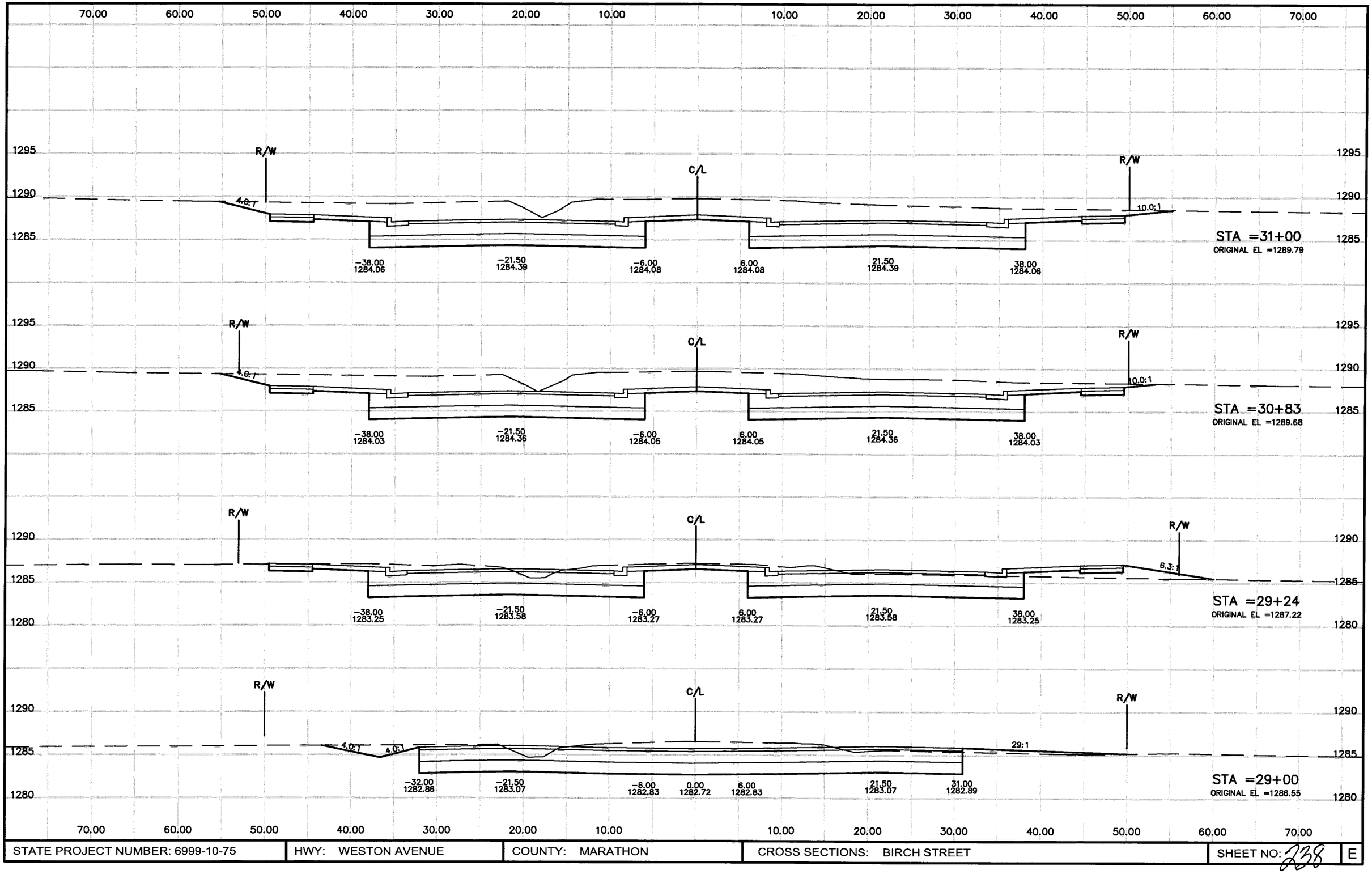

STATE PROJECT NUMBER: 6999-10-75	HWY: WESTON AVENUE	COUNTY: MARATHON	CROSS SECTIONS: BIRCH STREET	SHEET NO: 238	E

P:\DRAFT\32290200 WDOT\rc005008.dwg, Model, 04/01/2004 10:01:26 AM

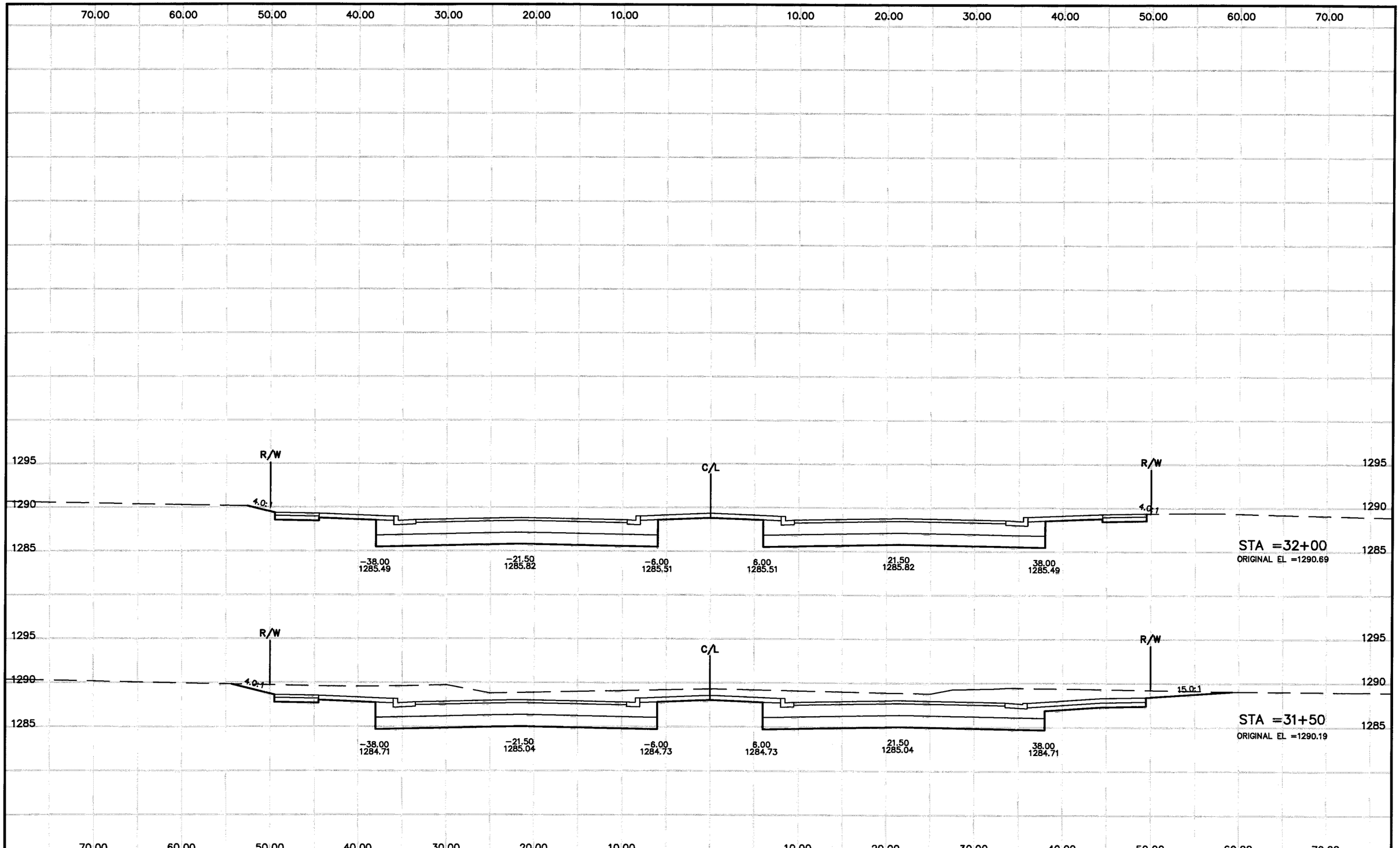

P:\DRAFT\32290200 WDOT\rc006008.dwg, Model, 04/01/2004 10:01:39 AM

STATE PROJECT NUMBER: 6999-10-75	HWY: WESTON AVENUE	COUNTY: MARATHON	CROSS SECTIONS: BIRCH STREET	SHEET NO: 239	E

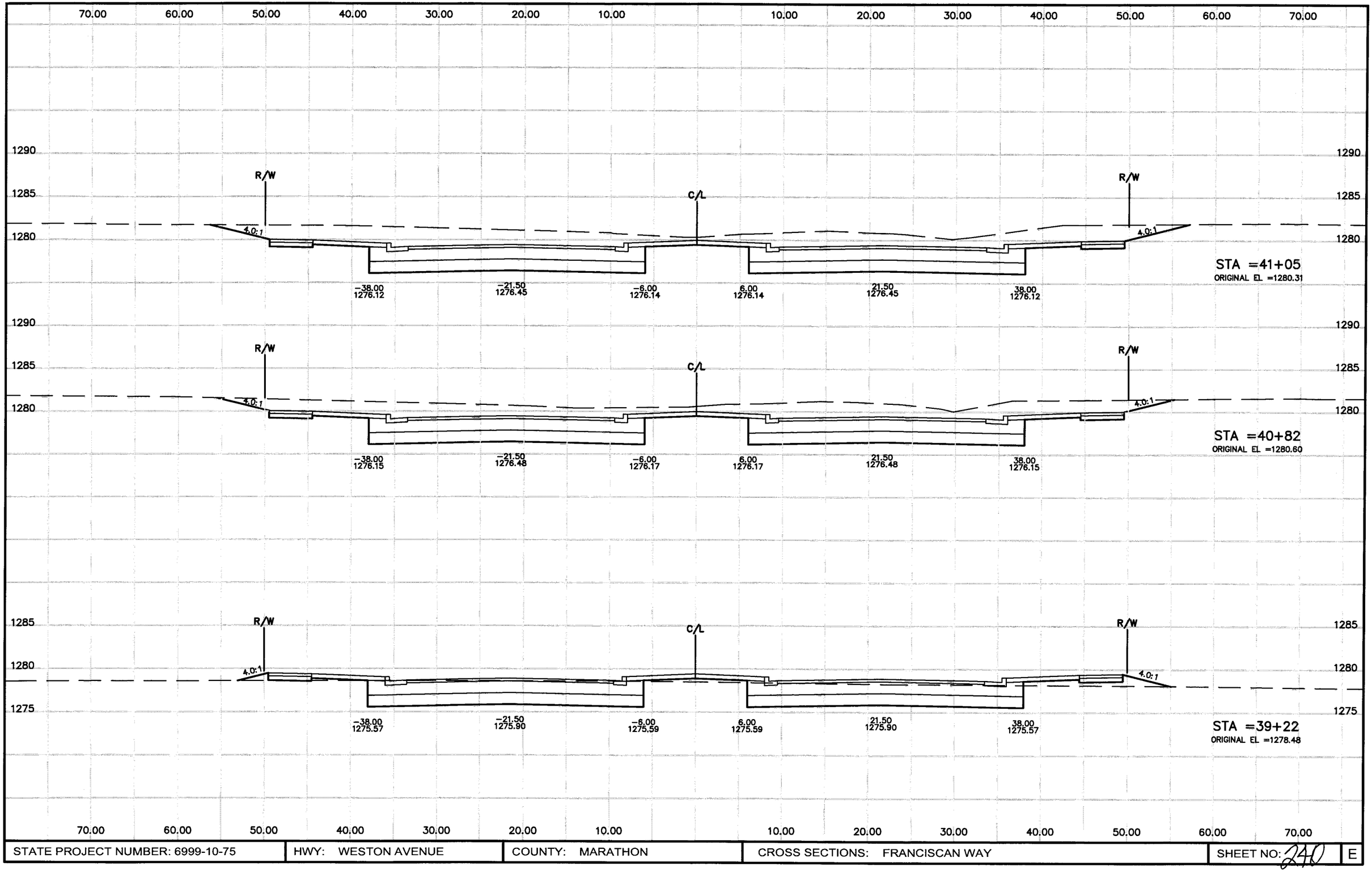

STATE PROJECT NUMBER: 6999-10-75	HWY: WESTON AVENUE	COUNTY: MARATHON	CROSS SECTIONS: FRANCISCAN WAY	SHEET NO: 240 E

P:\DRAFT\32290200 WDOT\rc001009.dwg, Model, 04/01/2004 10:02:01 AM

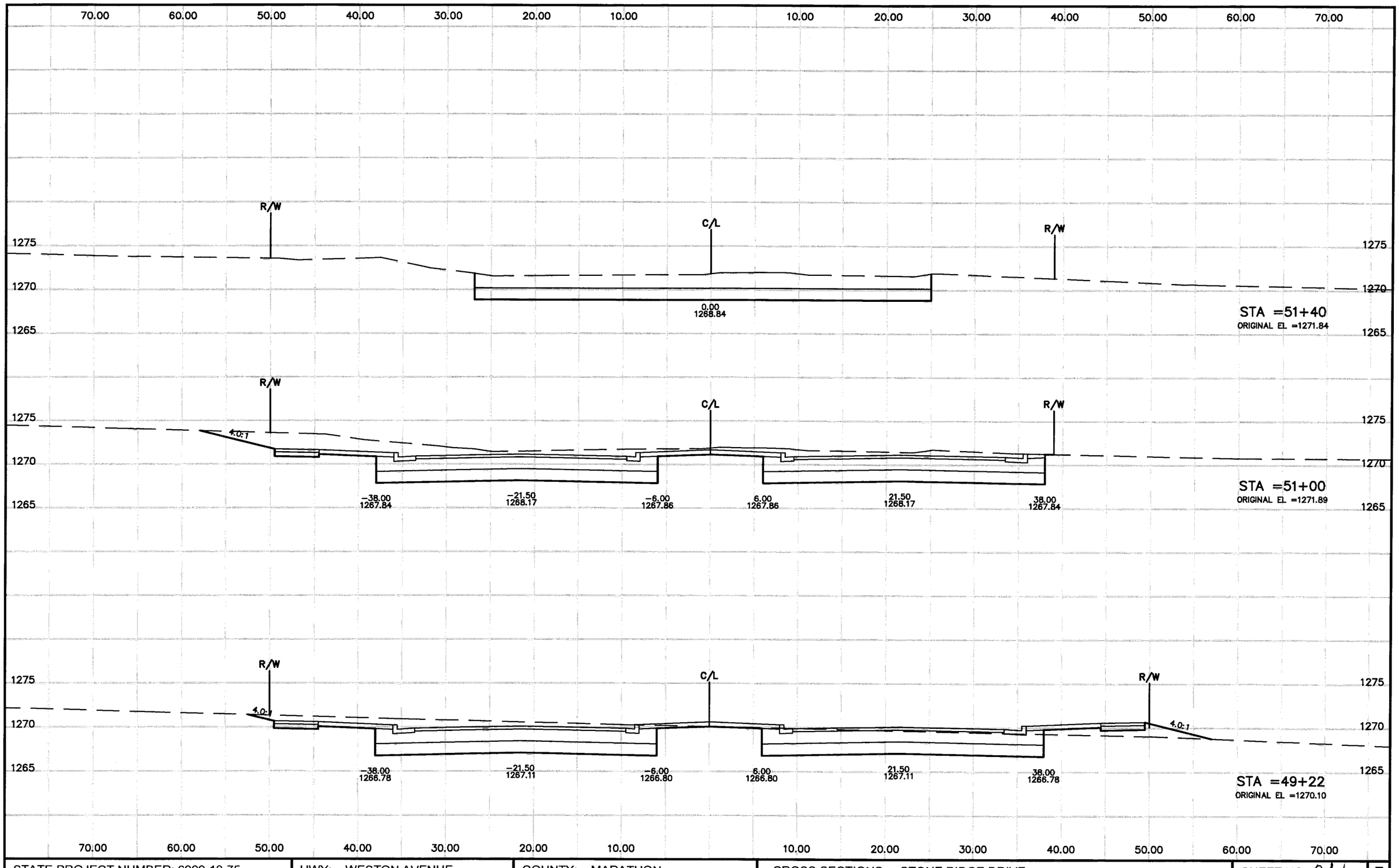

STATE PROJECT NUMBER: 6999-10-75	HWY: WESTON AVENUE	COUNTY: MARATHON	CROSS SECTIONS: STONE RIDGE DRIVE	SHEET NO: 24	E

P:\DRAFT\3229020O WDOTvc002010.dwg, Model, 04/01/2004 10:02:22 AM

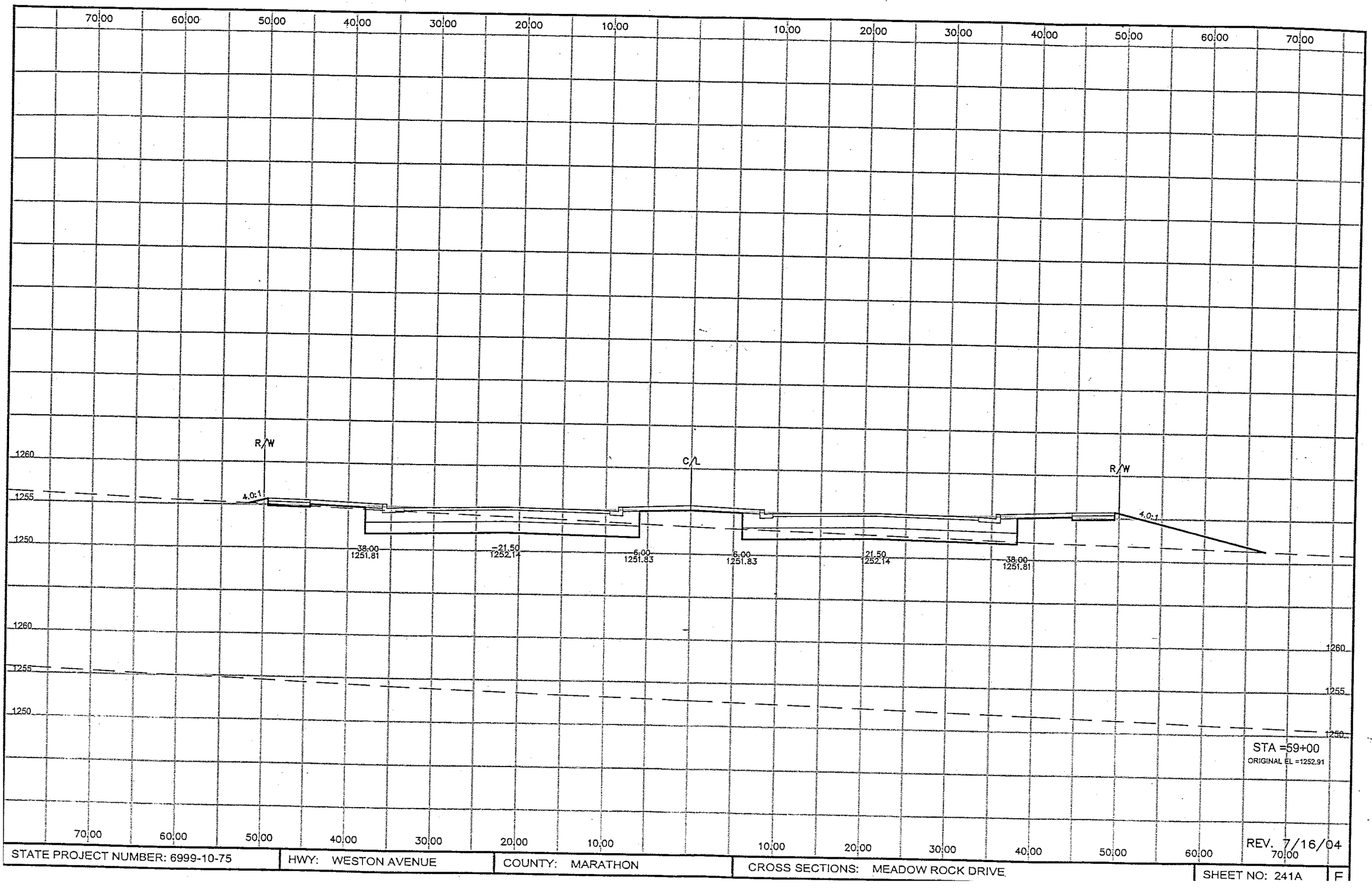

REV. 7/16/04

STATE PROJECT NUMBER: 6999-10-75	HWY: WESTON AVENUE	COUNTY: MARATHON	CROSS SECTIONS: MEADOW ROCK DRIVE	SHEET NO: 241A	F